PROJECT ADDRESS:
170 N SAN PEDRO RD
SAN RAFAEL, CA 94903

PROJECT DESCRIPTION:
NEW RESTROOMS ADDITION BUILDING AND ASSOCIATED WORK

CODE ANALYSIS
SEE SHEET GEN-2 FOR COMPLETE CODE ANALYSIS

PROJECT SUMMARY

DIVISION OF THE STATE ARCHITECT (DSA)
DSA OAKLAND REGIONAL OFFICE
1515 CLAY STREET, SUITE 1201
OAKLAN, CA 94162

LOCAL FIRE AUTHORITY
CITY FIRE DEPARTMENT
1600 LOS GAMOS DRIVE
SAN RAFAEL CA 94903
P: 415.485. 3304

GOVERNING AGENCIES

THIS PROJECT SHALL COMPLY WITH ALL FEDERAL, STATE AND LOCAL CODES INCLUDING, BUT NOT LIMITED TO, THE FOLLOWING:

FEDERAL:
AMERICANS WITH DISABILITIES ACT (ADA)

ACCESSIBILITY GUIDELINES FOR BUILDINGS AND FACILITIES (ADAAG)

STATE OF CALIFORNIA PARTIAL LIST OF APPLICABLE CODES AS OF JAN 1, 2020

2022 BUILDING STANDARDS ADMINISTRATIVE CODE
CALIFORNIA CODE OF REGULATIONS (CCR) PART 1, TITLE 24 C.C.R.

2022 CALIFORNIA BUILDING CODE (CBC)
CALIFORNIA CODE OF REGULATIONS (CCR) TITLE 24, PART 2
(2018 INTERNATIONAL BUILDING CODE WITH THE INTERNATIONAL CODE COUNCIL WITH CALIFORNIA AMENDMENTS)

2022 CALIFORNIA ELECTRICAL CODE (CEC)
CALIFORNIA CODE OF REGULATIONS (CCR) TITLE 24, PART 3
(2018 NATIONAL ELECTRICAL CODE OF THE NATIONAL FIRE PROTECTION ASSOCIATION, NFPA)

2022 CALIFORNIA MECHANICAL CODE
CALIFORNIA CODE OF REGULATIONS (CCR) TITLE 24, PART 4
(2018 UNIFORM MECHANICAL CODE OF THE INTERNATIONAL ASSOCIATION OF PLUMBING AND MECHANICAL OFFICIALS, IAPMO)

2022 CALIFORNIA PLUMBING CODE
CALIFORNIA CODE OF REGULATIONS (CCR) TITLE 24, PART 5
(2018 UNIFORM PLUMBING CODE OF THE INTERNATIONAL ASSOCIATION OF THE PLUMBING AND MECHANICAL OFFICIALS, IAPMO)

2022 CALIFORNIA ENERGY CODE
CALIFORNIA CODE OF REGULATIONS (CCR) TITLE 24, PART 6

2022 CALIFORNIA FIRE CODE
CALIFORNIA CODE OF REGULATIONS (CCR) TITLE 24, PART 9
(2018 INTERNATIONAL FIRE CODE OF THE INTERNATIONAL CODE COUNCIL)

2022 CALIFORNIA GREEN BUILDING STANDARDS CODE (CAL GREEN CODE)
CALIFORNIA CODE OF REGULATIONS (CCR) TITLE 24, PART 11

2022 CALIFORNIA REFERENCED STANDARDS CODE
CALIFORNIA CODE OF REGULATIONS (CCR) TITLE 24, PART 12

PUBLIC SAFETY, STATE FIRE MARSHAL REGULATIONS
CALIFORNIA CODE OF REGULATIONS (CCR) TITLE 19

PARTIAL LIST OF APPLICABLE STANDARDS:

2022 BUILDING CODE (FOR SFM) REFERENCED STANDARDS
CHAPTER 35

NFPA 13	AUTOMATIC SPRINKLER SYSTEM	2022 EDITION
NFPA 17	DRY CHEMICAL EXTINGUISHING SYSTEMS	2021 EDITION
NFPA 17A	WET CHEMICAL SYSTEMS	2021 EDITION
NFPA 72	NATIONAL FIRE ALARM CODE	2022 EDITION
NFPA 80	FIRE DOORS AND OTHER OPENING PROTECTIVES	2022 EDITION
NFPA 2001	CLEAN AGENT FIRE EXTINGUISHING SYSTEMS	2022 EDITION
UL 464	AUDIBLE SIGNAL APPLIANCES	2023 EDITION
UL 521	HEAT DETECTORS FOR FIRE PROTECTION SIGNAL SYSTEMS	2023 EDITION

APPLICABLE CODES

SVA ARCHITECTS IS THE DESIGNATED ARCHITECT OF RECORD AS REQUIRED BY THE STATE OF CALIFORNIA. THE ARCHITECT OF RECORD SHALL REVIEW SUBMITTALS AND COORDINATE SUBMITTALS AND DEFERRED SUBMITTALS THROUGH THE DIVISION OF THE STATE ARCHITECT. DEFERRED SUBMITTALS SHALL NOT BE INSTALLED UNTIL THEIR DESIGN AND SUBMITTAL DOCUMENTS HAVE BEEN APPROVED BY THE DIVISION OF THE STATE ARCHITECT.

DSA SHALL BE NOTIFIED IN WRITING BY THE OWNER IF THE ARCHITECT OF RECORD IS CHANGED OR IS UNABLE TO CONTINUE TO PERFORM THE DUTIES. THE OWNER SHALL DESIGNATE A SUBSTITUTE ARCHITECT OR ENGINEER OF RECORD WHO SHALL PERFORM ALL OF THE DUTIES REQUIRED OF THE ORIGINAL ARCHITECT OF RECORD.

REVIEW AND COMMENT ON SUBMITTALS AND DEFERRED SUBMITTALS SHALL NOT RELIEVE THE AUTHOR OF THE DOCUMENTS OR THE CONTRACTOR FROM COMPLIANCE WITH ALL APPLICABLE CODES AND THE REQUIREMENTS OF THE DRAWINGS AND SPECIFICATIONS. THE REVIEW IS ONLY FOR GENERAL CONFORMANCE WITH THE DESIGN CONCEPT OF THE PROJECT AND GENERAL COMPLIANCE WITH INFORMATION GIVEN IN THE CONTRACT DOCUMENTS. THE CONTRACTOR IS RESPONSIBLE FOR CONFIRMING AND CORRELATING ALL QUANTITIES AND DIMENSIONS, SELECTING FABRICATION PROCESSES AND TECHNIQUES OF CONSTRUCTION, COORDINATING HIS WORK WITH THAT OF OTHER TRADES, AND PERFORMING HIS WORK IN A SAFE AND SATISFACTORY MANNER.

ARCHITECT OF RECORD

STATEMENT OF GENERAL CONFORMANCE
THE DRAWINGS OR SHEETS LISTED IN THE INDEX ON THIS SHEET HAVE BEEN PREPARED BY OTHER DESIGN PROFESSIONALS OR CONSULTANTS WHO ARE LICENSED AND/OR AUTHORIZED TO PREPARE SUCH DRAWINGS IN THIS STATE. IT HAD BEEN EXAMINED BY ME FOR:

1. DESIGN INTENT AND APPEARS TO MEET THE APPROPRIATE REQUIREMENTS OF TITLE 24, CALIFORNIA CODE OF REGULATIONS AND THE PROJECT SPECIFICATIONS PREPARED BY ME
2. COORDINATION WITH MY PLANS AND SPECIFICATIONS AND IS ACCEPTABLE FOR INCORPORATION INTO THE CONSTRUCTION OF THE PROJECT.

THIS STATEMENT OF GENERAL CONFORMANCE "SHALL" NOT BE CONSTRUED AS RELIEVING ME OF MY RIGHTS, DUTIES AND RESPONSIBILITIES UNDER SECTION 17302 AND 81138 OF THE EDUCATION CODE AND SECTION 4-336, 4-341 AND 4-344 OF TITLE 24, PART 1 (TITLE 24, PART 1 SECTION 4-317) (B))

GENERAL CONFORMANCE STATEMENT

OWNER
SAN RAFAEL CITY SCHOOLS
320 NOVA ALBION WAY,
SAN RAFAEL, CA 94903
CONTACT: DAN ZAICH
P: (415) 492-3200

ARCHITECT
SVA ARCHITECTS
6 HUTTON CENTRE DRIVE, SUITE 1150
SANTA ANA,CA 92707
CONTACT: PROJECT MANAGER
P: 949.809.3380

CONSTRUCTION MANAGER
X
203 X ST. SUITE X
OAKLAND,CA 94XXX
CONTACT: XX
P: X

CIVIL ENGINEER
HOHBACH-LEWIN, INC
260 SHERIDAN AVE, SUITE 150
CONTACT: BILL HENN
PALO ALTO,CA 94306
CONTACT:BILL HENN
P: 650.617.5930

STRUCTURAL ENGINEER
KPFF, INC
45 FREMONT STREET, 28th FLR.
SAN FRANCISCO,CA 94105
CONTACT: DAVID ROSSI
P.650.617.5930

MECHANICAL ENGINEER
TK1SC
11870 PIERCE ST. SUITE 160
RIVERSIDE,CA 92505
CONTACT: BILL VOLLER
P.951.299.4160

MECHANICAL ENGINEER
TK1SC
11870 PIERCE ST. SUITE 160
RIVERSIDE,CA 92505
CONTACT: BILL VOLLER
P.951.299.4160

MECHANICAL ENGINEER
TK1SC
11870 PIERCE ST. SUITE 160
RIVERSIDE,CA 92505
CONTACT: BILL VOLLER
P.951.299.4160

PROJECT DIRECTORY

1. ALL WORK SHALL CONFORM TO TITLE 24, CALIFORNIA CODE OF REGULATIONS (CCR).
2. CHANGES TO THE APPROVED DRAWINGS AND SPECIFICATIONS SHALL BE MADE BY AN ADDENDUM OR A CHANGE ORDER APPROVED BY THE DIVISION OF THE STATE ARCHITECT (DSA), AS REQUIRED BY SECTION 4-338, PART 1, TITLE 24, CCR.
3. A PROJECT INSPECTOR EMPLOYED BY THE DISTRICT (OWNER) AND APPROVED BY DSA SHALL PROVIDE CONTINUOUS INSPECTION OF THE WORK. THE DUTIES OF THE INSPECTOR ARE DEFINED IN SECTION 4-342, PART 1, TITLE 24, CCR: CLASS 1.
4. CCD MUST BE SIGNED AS REQUIRED BY DSA IR A-6.
5. A COPY OF CCR TITLE 24, PARTS 1 THROUGH 5 MUST BE KEPT ON SITE DURING CONSTRUCTION.

6. THE CALIFORNIA ENERGY CODE SECTION 10-103 REQUIRES ACCEPTANCE TESTING ON ALL NEWLY INSTALLED LIGHTHING CONTROLS, MECHANICAL SYSTEMS, ENVELOPES AND PROCESS EQUIPMENT AFTER INSTALLATION AND BEFORE PROJECT COMPLETION. AN ACCEPTANCE TEST IS A FUNTIONAL PERFORMANCE TEST TO HELP ENSURE THAT NEWLY INSTALLED EQUPMENT IS OPERANTING AND COMPLIANCE WITH THE ENERGY CODE.
7. LIGTHING CONTROLS ACCEPTANCE TEST MUST BE PEFORMED BY A CERTIFIED LIGHTING CONTROLS ACCEPTANCVE TEST TECHNICIAN (ATT).
8. MECHANICAL SYSTEM ACCEPTANCE TEST MUST BE PERFORMED BY A CERTIFIED MECHANICAL ATT FOR PROJECT SUBMITTED ON OR AFTER OCTOBER 1, 2021. ENVELOPE AND PROCESS EQUIPMENT ACCEPTANCE TESTS SHALL BE PERFOMED BY THE INSTALLING CONTRACTOR, ENGINEEER /ARCHITECT OF RECORD OR THE OWNER'S AGENT.

A LISTING OF CERTIFIED ATT CAN BE FOUND AT:
https://www.energy.ca.gov/programs-and-topics/programs/acceptance-test-technician-certification-provider-program/acceptance.

THE ACCEPTANCE TESTING PROCEDURES MUST BE REPEATED, AND DEFICIENCIES MUST BE CORRECTED BY THE BUILDER OR INSTALLING CONTRACTOR UNTIL THE CONSTRUCTION /INSTALLATION OF THE SPECIFIED SYSTEMS CONFORM AND PASS THE REQUIRED ACCEPTANCE CRITERIA.
PROJECT INSPECTORS WILL COLLECT THE FORMS TO CONFIRM THAT THE REQUIRED ACCEPTANCE TEST HAVE BEEN COMPLETED.

GENERAL NOTES

NEW BUILDING SHALL BE PROVIDED WITH EMERGENCY RESPONDER RADIO COVERAGE IN ACCORDANCE WITH CFC SECTION 510. ARCHITECT SHALL CONTACT LOCAL FIRE DEPARTMENT TO OBTAIN DESIGN, EQUIPMENT SPECS, TESTING AND ACCEPTANCE CRITERIA. PLANS AND REQUESTED DOCUMENTATION SHALL BE SUBMITTED TO THE LOCAL AUTHORITY HAVING JURISDICTION FOR REVIEW AND APPROVAL. UPON COMPLETION, COPIES OF THE APPROVED PLANS, EQUIPMENT DATA SHEETS, TESTING AND ACCEPTANCE DOCUMENTATION SHALL BE PROVIDED TO THE SCHOOL DISTRICT.

THE CALIFORNIA ENERGY CODE SECTION 10-103 REQUIRES ACCEPTANCE TESTING ON ALL NEWLY INSTALLED LIGHTING CONTROLS, MECHANICAL SYSTEMS, ENVELOPES, AND PROCESS EQUIPMENT AFTER INSTALLATION AND BEFORE PROJECT COMPLETION. AN ACCEPTANCE TEST IS A FUNCTIONAL PERFORMANCE TEST TO HELP ENSURE THAT NEWLY INSTALLED EQUIPMENT IS OPERATING AND IN COMPLIANCE WITH THE ENERGY CODE . LIGHTING CONTROLS ACCEPTANCE TEST MUST BE PERFORMED BY A CERTIED LIGHTING CONTROLS ACCEPTANCE TEST TECHNICIAN (ATT) MECHANICAL SYSTEM ACCEPTANCE TEST MUST BE PERFORMED BY A CERTIFIED MECHANICAL ATT FOR PROJECT SUBMITTED ON OR AFTER OCTOBER 1, 2021. ENVELOPE AND PROCESS EQUIPMENT ACCEPTANCE TEST SHALL BE PERFORMED BY THE INSTALLING CONTRACTOR, ENGINNER/ARCHITECT OF RECORD OR THE OWNER'S AGENT A LISTING OF CERTIFIED ATT CAN BE FOUND At: https://www.energy.ca.gov/programss/acceptance-test-technician-certification-provider-program/acceptance . THE ACCEPTANCE TESTING PROCEDURES MUST BE REPEATED, AND DEFICIENCIES MUST BE CORRECTED BY THE BUILDER OR INSTALLING CONTRACTOR UNTILTHE CONSTRUCTION//INSTALLATION OF THE SPECIFIED SYSTEMS CONFORM AND PASS THE REQUIRED ACCEPTANCE CRITERIA. PROJECT INSPECTORS WILL COLLECT THE FORMS TO COMFIRM THAT THE REQUIRED ACCEPTANCE TEST HAVE BEEN COMPLETED.

EMERGENCY RESPONDER RADIO COVERAGE

THE FOLLOWING ITEMS ARE DESIGN-BUILD SYSTEMS AND WILL BE A DEFERRED SUBMITTAL BY THE CONTRACTOR AT A LATER DATE. THE CONTRACTOR SHALL BE RESPONSIBLE FOR ENGINEERING AND CALCULATIONS FOR APPLICABLE ITEMS. THE CONTRACTOR SHALL RETAIN THE SERVICES OF A CIVIL OR STRUCTURAL ENGINEER WHO SHALL BE RESPONSIBLE FOR THE DESIGN. THE CONTRACTOR SHALL SUBMIT CALCULATIONS AND SHOP DRAWINGS TO THE ARCHITECT OF RECORD, WHO SHALL REVIEW THEM AND FORWARD THEM TO THE DIVISION OF THE STATE ARCHITECT WITH NOTATION INDICATING THAT THE DEFERRED SUBMITTAL DOCUMENTS HAVE BEEN FOUND TO BE IN GENERAL CONFORMANCE WITH THE DESIGN OF THE BUILDING. THE SUBMITTAL ITEMS SHALL NOT BE INSTALLED UNTIL THEIR DESIGN AND SUBMITTAL DOCUMENTS HAVE BEEN APPROVED BY THE DIVISION OF THE STATE ARCHITECT.

1. NONE

DEFERRED APPROVALS

I CERTIFY THAT ALL DRAWINGS OR SHEETS LISTED IN THE INDEX ON THIS SHEET (CIVIL, STRUCTURAL, MECHANICAL, PLUMBING, ELECTRICAL, FIRE PROTECTION AND THEATRICAL) ARE IN GENERAL CONFORMANCE AND HAVE BEEN COORDINATED.

LICENSED ARCHITECT
ROBERT M. SIMONE
No. C-18301
Jan 31, 2025
STATE OF CALIFORNIA

GENERAL

GEN-1	PROJECT INFORMATION & SHEET INDEX
GEN-3	GENERAL NOTES
GEN-4	PROJECT SIGNAGE- SITE DETAILS
GEN-5	ACCESSIBILITY DETAILS

Grand total: 4

CIVIL

C1.0	COVER SHEET
C1.1	NOTES
C2.0	DEMOLITION PLAN
C3.0	GRADING AND DRAINAGE
C4.0	UTILITY PLAN
C5.0	EROSION CONTROL PLAN

Grand total: 6

ARCHITECTURAL

A1.0	OVERALL SITE PLAN
A1.1	SITE PLAN, STAIRS & EXT. DETAILS
A11.1	FLOOR & RCP PLAN, INT. ELEV & SECTIONS
A11.2	FLOOR PLAN ENLARGED TYP. RESTROOM & EXTERIOR ELEVATIONS
A52.1	DOOR SCHEDULE & FINISH SCHEDULE
A60.0	CONSTRUCTION ASSEMBLY NOTES AND REQUIREMENTS
A60.1	PENETRATION ASSEMBLIES
A61.1	WALL TYPES - WOOD STUD
A61.2	WALL DETAILS
A61.3	WALL DETAILS & CEILING DETAILS
A62.1	DOORS DETAILS
A63.1	ROOF DETAILS
A63.2	ROOF DETAILS

Grand total: 13

STRUCTURAL

S0.1	TITLE PAGE
S1.01	GENRAL NOTES
S1.02	GENERAL NOTES
S2.01	PLAN & ELEVATIONS
S3.01	TYPICAL CONCRETE DETAILS
S4.01	SHEAR WALL FRAMING
S4.02	WOOD FRAMING DETAILS

Grand total: 7

MECHANICAL

M0.01	MECHANICAL LEGEND, ABBREVIATION & NOTES
M0.02	MECHANICAL SCHEDULES, DETAILS AND CONTROL
M0.03	MECHANICAL FLOOR PLAN

Grand total: 3

ELECTRICAL

E0.01	SYMBOL LIST
E1.01	SITE PLAN
E1.02	ENLARGED FLOOR PLAN
E1.03	LIGHTING PLAN
E2.01	SINGLE LINE DIAGRAM
E2.02	LIGHTING FIXTURES SCHEDULE
E2.03	TITLE 24 CALCULATIONS
E2.04	TITLE 24 CALCULATIONS
E3.01	ELECTRICAL DETAILS
E3.02	ELECTRICAL DETAILS
E3.03	ELECTRICAL DETAILS
E4.01	ELECTRICAL SPECIFICATONS
E4.02	ELECTRICAL SPECIFICATONS
EFA0.01	FIRE ALARM NOTE AND SYMBOLS
EFA0.02	FIRE ALARM DETAILS
EFA0.03	DIAGRAM & CALCULATION
EFA1.01	FIER ALARM FLOOR PLANS

Grand total: 17

PLUMBING

P0.01	LEGEND, NOTES, SCHEDULES & SHEET LIST
P0.02	SPECIFICATIONS
P1.01	PLUMBING SITE PLAN
P1.02	PLUMBING ENLARGED PLAN
P5.01	PLUMBING DETAILS

Grand total: 5

GENERAL NOTES

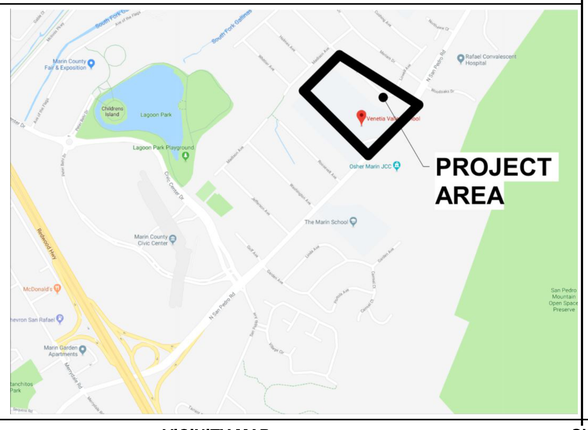

VICINITY MAP

SHEET INDEX

IDENTIFICATION STAMP
DIV. OF THE STATE ARCHITECT
APP: 01-120592 INC:
REVIEWED FOR
SS ☑ FLS ☑ ACS ☑
DATE: 7/11/2023

OWNER: San Rafael City Schools

PROJECT NAME: Venetia Valley - Middle School Restroom Addition

CLIENT ADDRESS: 177 N SAN PEDRO RD., SAN RAFAEL, CA 94903

LICENSED ARCHITECT
ROBERT M. SIMONE
No. C-18301
Jan 31, 2025
STATE OF CALIFORNIA

REVISIONS:

	DESCRIPTION	DATE
1		
2		
3		
4		
5		
6		
7		
8		
9		
10		

PROJECT NO: 2022-40125
DATE ISSUED: 06.29.2023
SCALE:

GEN-1

PROJECT INFORMATION & SHEET INDEX

SVA ARCHITECTS

6 HUTTON CENTRE DR, SUITE 1150 SANTA ANA, CA 92707
T 949.809.3380 WWW.SVA-ARCHITECTS.COM

THIS DOCUMENT CONTAINS INFORMATION PROPRIETARY TO SVA ARCHITECTS INC. AND IS FURNISHED IN CONFIDENCE FOR THE LIMITED PURPOSE OF EVALUATION, BIDDING OR REVIEW. THIS DOCUMENT OR ITS CONTENTS MAY NOT BE USED FOR ANY OTHER PURPOSE AND MAY NOT BE REPRODUCED OR DISCLOSED TO OTHERS WITHOUT THE PRIOR WRITTEN CONSENT OF SVA ARCHITECTS INC. ALL RIGHTS RESERVED. © COPYRIGHT 2018.

ACCESSIBILITY NOTES

1. SITE DEVELOPMENT

A. GRADE AND DEVELOP SITE SUCH THAT ALL PRIMARY BUILDING ENTRANCES ARE ACCESSIBLE TO THE PHYSICALLY DISABLED FROM THE PUBLIC WAY AND DISABLED PARKING PROVIDED.

B. ONE ACCESSIBLE ROUTE SHALL CONNECT ACCESSIBLE BUILDINGS, FACILITIES AND SPACES ON THE SAME SITE. WHERE MORE THAN ONE ROUTE IS PROVIDED, ALL ROUTES SHALL BE ACCESSIBLE

C. IF AN ACCESSIBLE ROUTE HAS A CHANGE IN LEVEL GREATER THAN 1/2", THEN A CURB RAMP, RAMP, ELEVATOR, OR PLATFORM LIFT SHALL BE PROVIDED.

D. ALL WALKS, HALLS, CORRIDORS, AISLES, AND OTHER SPACES THAT ARE PART OF AN ACCESSIBLE ROUTE SHALL PROVIDE A MINIMUM CLEAR WIDTH OF 48 INCHES AND A CLEAR HEIGHT OF 80 INCHES.

2. WALKS AND SIDEWALKS

A. WALKS AND SIDEWALKS SUBJECT TO THESE REGULATIONS SHALL HAVE A CONTINUOUS COMMON SURFACE, NOT INTERRUPTED BY STEPS OR BY ABRUPT CHANGES IN LEVEL EXCEEDING 1/2", AND SHALL BE A MINIMUM OF 48 INCHES IN WIDTH.

B. ALL SIDEWALKS SHALL BE STABLE, FIRM AND SLIP RESISTANT.

C. SURFACE CROSS SLOPES SHALL NOT EXCEED 1:48 (CBC 11B-403.3).

D. WALKS, SIDEWALKS AND PEDESTRIAN WAYS SHALL BE FREE OF GRATINGS WHENEVER POSSIBLE. GRATINGS LOCATED IN THE SURFACE OF ANY OF THESE AREAS, GRID OPENINGS IN THE GRATING SHALL BE LIMITED TO 1/2" IN THE DIRECTION OF TRAFFIC FLOW.

E. ABRUPT CHANGES IN LEVEL ALONG ANY ACCESSIBLE ROUTE SHALL NOT EXCEED 1/2". WHEN CHANGES DO OCCUR, THEY SHALL BE BEVELED WITH A SLOPE NO GREATER THAN 1:2 EXCEPT THAT LEVELS NOT EXCEEDING 1/4" MAY BE VERTICAL.

F. WHEN CHANGES IN LEVELS GREATER THAN 1/2" ARE NECESSARY THEY SHALL COMPLY WITH THE REQUIREMENTS FOR CURB RAMPS OR RAMPS AS REQUIRED.

G. WALKS SHALL BE PROVIDED WITH A LEVEL AREA NOT LESS THAN 60" SQUARE AT A DOOR OR GATE THAT SWINGS TOWARD THE WALK, AND NOT LESS THAN 48" WIDE BY 44" DEEP AT A DOOR OR GATE THAT SWINGS AWAY FROM THE WALK. SUCH WALKS SHALL EXTEND 24" TO THE SIDE OF THE STRIKE EDGE OF A DOOR OR GATE THAT SWINGS TOWARD THE WALK.

H. WHEN THE SLOPE IN THE DIRECTION OF TRAVEL OF ANY WALK EXCEEDS 5%, IT MUST COMPLY WITH THE PROVISIONS FOR PEDESTRIAN RAMPS (PER CBC 11B-405).

I. ALL WALKS WITH CONTINUOUS GRADIENTS SHALL HAVE LEVEL AREAS AT LEAST 5 FEET IN LENGTH AT INTERVALS NOT EXCEEDING 400 FEET.

3. ENTRANCES AND DOORWAYS

A. PRIMARY ENTRANCES TO BUILDINGS AND FACILITIES SHALL BE MADE ACCESSIBLE TO THE DISABLED.

B. ACCESSIBLE ENTRANCES SHALL BE IDENTIFIED WITH AT LEAST ONE "ISA" SIGN AND WITH ADDITIONAL DIRECTIONAL SIGNS AS REQUIRED VISIBLE FROM APPROACHING PEDESTRIAN WAYS.

C. LATCHING AND LOCKING DOORS THAT ARE HAND ACTIVATED AND ARE IN THE PATH OF TRAVEL, SHALL BE OPERABLE WITH A SINGLE EFFORT BY LEVER TYPE HARDWARE, PANIC BARS, PUSH-PULL ACTIVATING BARS OR OTHER HARDWARE DESIGNED TO PROVIDE PASSAGE WITHOUT REQUIRING THE ABILITY TO GRASP THE OPENING HARDWARE.

D. HAND ACTIVATED DOOR HARDWARE SHALL BE CENTERED BETWEEN 34" AND 44" ABOVE THE FLOOR (CBC 11B-404.2.7).

E. THE FLOOR OR LANDING ON EACH SIDE OF AN ENTRANCE OR PASSAGE DOOR SHALL BE LEVEL AND CLEAR. THE LEVEL AND CLEAR AREA SHALL BE A MINIMUM 60" SQUARE IN THE DIRECTION OF THE DOOR SWING AND A MINIMUM 44" SQUARE OPPOSITE THE DIRECTION OF DOOR SWING (48" IF THE DOOR HAS BOTH LATCH AND CLOSER). THE SQUARES SHALL BE MEASURED AT RIGHT ANGLES TO THE PLANE OF THE DOOR IN ITS CLOSED POSITION. SEE NOTE I BELOW FOR STRIKE SIDE REQUIREMENTS.

F. THE WIDTH OF THE LEVEL AND CLEAR AREA ON THE SIDE TO WHICH THE DOOR SWINGS SHALL EXTEND 24" PAST THE STRIKE EDGE OF THE DOOR FOR EXTERIOR DOORS AND 18" PAST THE STRIKE EDGE FOR INTERIOR DOORS AND THE PRIMARY ENTRANCE TO THE DWELLING UNIT.

G THE FLOOR OR LANDING SHALL BE NOT MORE THAN 1/2" LOWER THAN THE THRESHOLD OF THE DOORWAY. CHANGE IN LEVEL BETWEEN 1/4" AND 1/2" SHALL BE BEVELED NO GREATER THAN 1:2.

H. THE BOTTOM 10 INCHES OF ALL DOORS EXCEPT SLIDING AND POCKET DOORS SHALL HAVE A SMOOTH UNINTERRUPTED SURFACE TO ALLOW THE DOOR TO BE OPENED BY A WHEELCHAIR FOOTREST WITHOUT CREATING A TRAP OR HAZARDOUS CONDITION.

I. MAXIMUM EFFORT TO OPERATE DOORS SHALL NOT EXCEED 5 LBS FOR EXTERIOR DOORS AND 5 LBS FOR INTERIOR DOORS, SUCH PULL OR PUSH EFFORT SHALL BE APPLIED AT RIGHT ANGLES TO HINGED DOORS AND AT THE CENTER PLANE OF SLIDING OR FOLDING DOORS. COMPENSATING DEVICES OR AUTOMATIC DOOR OPERATORS MAY BE UTILIZED TO MEET THE ABOVE STANDARDS. THE AUTHORITY HAVING JURISDICTION MAY INCREASE THE MAXIMUM EFFORT TO OPERATE FIRE DOORS TO ACHIEVE POSITIVE LATCHING, BUT NOT TO EXCEED 15 LBS MAX.

J. EXIT DOORS MUST OPEN FROM THE INSIDE WITHOUT A KEY, OR ANY SPECIAL KNOWLEDGE OR EFFORT. EXIT DOORS FROM BUILDINGS OR ROOMS SERVING 10 OR FEWER OCCUPANTS MAY HAVE A NIGHT LATCH, DEADBOLT OR SECURITY CHAIN, AS LONG AS THE DOORS CAN STILL BE OPENED FROM THE INSIDE WITHOUT A KEY, SPECIAL KNOWLEDGE OR EFFORT. IN ADDITION, THESE DEVICES ARE NOT MOUNTED MORE THAN 48" ABOVE THE FLOOR. MANUALLY OPERATED EDGE BOLTS, SURFACE MOUNTED FLUSH BOLTS AND SURFACE BOLTS ARE PROHIBITED. WHEN EXIT DOORS ARE USED IN PAIRS AND AUTOMATIC FLUSH BOLTS ARE USED, THE DOOR LEAF WITH THE FLUSH BOLT MUST HAVE NO DOORKNOB OR SURFACE MOUNTED HARDWARE. THE UNLATCHING OF ANY LEAF MUST NOT REQUIRE MORE THAN ONE OPERATION.

K. EVERY REQUIRED EXIT MUST BE LARGE ENOUGH TO PERMIT A DOOR AT LEAST 3'-0" WIDE BY 6'-8" HIGH. EXIT DOORS SHALL OPEN AT LEAST 90 DEGREES AND PROVIDE A CLEAR WIDTH OF AT LEAST 32".

L. THRESHOLDS AT ALL EXTERIOR DOORS SHALL BE NO HIGHER THAN 1/2". SUCH THRESHOLDS SHALL BE BEVELED NO GREATER THAN 1:2.

M. THE FLOOR LANDING IMMEDIATELY OUTSIDE THE ENTRY MAY BE SLOPED UP TO 1/8" PER FOOT IN THE DIRECTION AWAY FROM THE PRIMARY ENTRANCE FOR DRAINAGE.

N. THE SPACE BETWEEN TWO CONSECUTIVE DOOR OPENINGS IN A VESTIBULE, SERVING OTHER THAN A REQUIRED EXIT STAIRWAY, MUST HAVE AT LEAST 48" OF CLEAR SPACE FROM ANY DOOR OPENING INTO THE VESTIBULE WHEN THE DOOR IS OPEN 90 DEGREES FROM ITS CLOSED POSITION. DOORS IN SERIES MUST SWING IN THE SAME DIRECTION OR AWAY FROM THE SPACE BETWEEN THE DOORS.

4. STAIRWAYS

A. STAIRWAYS SHALL HAVE HANDRAILS ON EACH SIDE. STAIRWAYS SHALL HAVE INTERMEDIATE HANDRAILS WHERE REQUIRED SUCH THAT ALL PORTIONS OF THE STAIRWAY WIDTH REQUIRED FOR EGRESS CAPACITY ARE WITHIN 30 INCHES OF A HANDRAIL. INTERMEDIATE HANDRAILS SHALL BE SPACED AT EQUAL INTERVALS WITHIN THE WIDTH OF THE STAIRWAY AND BE CONTINUOUS FOR THE ENTIRE LENGTH.

B. HANDRAILS MUST BE 34 TO 38 INCHES ABOVE THE NOSING OF THE TREADS AND MUST EXTEND IN THE DIRECTION OF THE STAIR RUN FOR AT LEAST 12" BEYOND THE TOP NOSING AND 12" PLUS THE TREAD WIDTH BEYOND THE BOTTOM NOSING.

C. ENDS SHALL BE RETURNED OR SHALL TERMINATE IN A NEWEL POST OR SAFETY TERMINAL.

D. HANDRAILS PROJECTING FROM A WALL SHALL HAVE A SPACE OF NOT LESS THAN 1-1/2-INCH BETWEEN THE WALL AND THE HANDRAIL.

E. THE HANDGRIP PORTION OF HANDRAILS SHALL BE NOT LESS THAN 1-1/4-INCHES NOR MORE THAN 1 1/2-INCHES IN CROSS-SECTIONAL DIMENSION OR THE SHAPE SHALL PROVIDE AN EQUIVALENT GRIPPING SURFACE AND SHALL HAVE A SMOOTH SURFACE WITH NO SHARP OR ABRASIVE CORNERS AND ALL EDGES MUST HAVE A MINIMUM 1/8" RADIUS.

F. THE UPPER APPROACH AND THE LOWER TREAD OF EACH INTERIOR STAIR SHALL BE MARKED BY A STRIP OF CLEARLY CONTRASTING COLOR THE FULL WIDTH OF THE TREAD AT LEAST 2-INCHES WIDE PLACED PARALLEL TOAND NOT MORE THAN 1-INCH FROM THE NOSE OF THE STEP OR LANDING TO ALERT THE VISUALLY IMPAIRED. THE STRIP SHALL BE OF A MATERIAL THAT IS AT LEAST AS SLIP RESISTANT AS THE OTHER TREADS OF THE STAIR.

G. WHERE STAIRWAYS OCCUR OUTSIDE A BUILDING, THE UPPER APPROACH AND ALL TREADS SHALL BE MARKED BY A STRIP OF CLEARLY CONTRASTING COLOR AT LEAST 2-INCHES WIDE AND PLACED PARALLEL TO AND NOT MORE THAN 1-INCH FROM THE NOSE OF THE STEP OR LANDING TO ALERT THE VISUALLY IMPAIRED. THE STRIP SHALL BE OF A MATERIAL THAT IS AT LEAST AS SLIP RESISTANT AS THE OTHER TREADS OF THE STAIR. A PAINTED STRIP SHALL BE ACCEPTABLE.

H. ALL TREAD SURFACES SHALL BE SLIP RESISTANT.

I. TREADS SHALL HAVE A SMOOTH, ROUNDED OR CHAMFERED EXPOSED EDGES, AND NO ABRUPT EDGES AT THE NOSING (LOWER FRONT EDGE).

J. NOSING SHALL NOT PROJECT MORE THAN 1-1/4 INCH PAST THE FACE OF THE RISER BELOW.

K. STAIR RISERS SHALL BE SOLID PER CBC 11B-504.

5. SANITARY FACILITIES

A. WHEELCHAIR ACCESSIBLE WATER CLOSET COMPARTMENTS SHALL BE EQUIPPED WITH A DOOR THAT HAS AN AUTOMATIC CLOSING DEVICE, AND SHALL HAVE A CLEAR UNOBSTRUCTED OPENING WIDTH OF 32-INCHES WHEN LOCATED AT THE END AND 34-INCHES WHEN LOCATED AT THE SIDE WITH THE DOOR POSITION AT AN ANGLE OF 90 DEGREES FROM ITS CLOSED POSITION.

B. TOILET FLUSH CONTROLS SHALL BE OPERABLE WITH ONE HAND, AND SHALL NOT REQUIRE TIGHT GRASPING, PINCHING, OR TWISTING OF THE WRIST. CONTROLS FOR FLUSH VALVES SHALL BE MOUNTED ON THE WIDE SIDE OF THE TOILET AREAS, NO MORE THAN 44-INCHES ABOVE THE FLOOR. THE FORCE REQUIRED TO ACTIVATE CONTROLS SHALL BE NO GREATER THAN 5 POUNDS PER FOOT.

C. WHERE URINALS ARE PROVIDED AT LEAST ONE WITH A RIM PROJECTING A MINIMUM OF 14-INCHES FROM THE WALL AND AT A MAXIMUM OF 17-INCHES ABOVE THE FLOOR SHALL BE PROVIDED.

D. URINAL FLUSH CONTROLS SHALL BE OPERABLE WITH ONE HAND, AND SHALL NOT REQUIRE TIGHT GRASPING, PINCHING, OR TWISTING OF THE WRIST AND SHALL BE MOUNTED NO MORE THAN 44" ABOVE THE FLOOR. THE FORCE REQUIRED TO ACTIVATE CONTROLS SHALL BE NO GREATER THAN 5 POUNDS PER FOOT.

E. HOT WATER AND DRAIN PIPES UNDER LAVATORIES SHALL BE INSULATED OR OTHERWISE COVERED.

F. FAUCET CONTROLS AND OPERATING MECHANISMS SHALL BE OPERABLE WITH ONE HAND AND SHALL NOT REQUIRE TIGHT GRASPING, PINCHING OR TWISTING OF THE WRIST. THE FORCE REQUIRED TO ACTIVATE CONTROLS SHALL BE NO GREATER THAN 5 POUNDS PER FOOT. LEVER OPERATED, PUSH TYPE AND ELECTRONICALLY CONTROLLED MECHANISMS ARE EXAMPLES OF ACCEPTABLE DESIGNS. SELF-CLOSING VALVES ARE ALLOWED IF THE FAUCET REMAINS OPEN FOR AT LEAST 10 SECONDS.

G. MIRRORS SHALL BE MOUNTED WITH THE BOTTOM GLASS EDGE NOT MORE THAN 40-INCHES ABOVE THE FLOOR.

H. LOCATE TOWEL, SANITARY NAPKIN, AND WASTE RECEPTACLES WITH ALL OPERABLE PARTS NOT MORE THAN 40-INCHES FROM THE FLOOR.

I. TOILET TISSUE DISPENSERS SHALL BE LOCATED ON THE WALL OR PARTITION WITHIN 7" TO 9" TO CENTERLINE FROM THE FRONT EDGE OF THE TOILET SEAT, MOUTED BELOW THE GRAB BAR, AT A MINIMUM HEIGHT OF 19 INCHES, AND 36 INCHES MAXIMUM TO THE FAR EDGE FROM THE REAR WALL. DISPENSERS SHALL PERMIT CONTINUOUS FLOW AND NOT CONTROL DELIVERY (CBC 11B-604.7).

J. GRAB BARS, TUB AND SHOWER SEATS, FASTENERS AND MOUNTING DEVICES SHALL BE DESIGNED FOR 250 LB. PER CBC 1607A.8.2.

K. GRAB BARS:
1. THE DIAMETER OR WIDTH OF THE GRIPPING SURFACE OF A GRAB BAR SHALL BE 1-1/4" TO 1-1/2" OR THE SHAPE SHALL PROVIDE AN EQUIVALENT GRIPPING SURFACE.
2. IF THE GRAB BARS ARE MOUNTED ADJACENT TO A WALL, THE SPACE BETWEEN THE WALL AND THE GRAB BARS SHALL BE 1-1/2".
3. A GRAB BAR AND ANY WALL OR OTHER SURFACE ADJACENT SHALL BE FREE OF ANY SHARP OR ABRASIVE ELEMENTS.
4. GRAB BARS SHALL NOT ROTATE WITHIN THEIR FITTINGS.
5. EDGES SHALL HAVE A MINIMUM RADIUS OF 1/8".

6. SWITCHES CONTROLS AND ELECTRICAL OUTLETS

A. RECEPTACLE OUTLETS SHALL BE 15" MIN ABOVE THE FINISHED FLOOR TO THE BOTTOM OF THE BOX PER CBC 11B-308.1.2.

B. SWITCHES SHALL BE 48" MAX. ABOVE THE FINISHED FLOOR TO THE TOP OF THE BOX (11B-308.1.1).

C. IF REACH IS OVER AN OBSTRUCTION (FOR EXAMPLE, A BASE CABINET) BETWEEN 20" AND 25" IN DEPTH, THE MAXIMUM HEIGHT IS REDUCED TO 44" FOR FORWARD APPROACH, OR 46" FOR SIDE APPROACH PROVIDED THE OBSTRUCTION IS NO MORE THAN 24" IN DEPTH. THE OBSTRUCTION MAY NOT EXTEND MORE THAN 25" FROM THE WALL BENEATH THE CONTROL.

D. THE CENTER OF FIRE ALARM INITIATING DEVICES (BOXES) SHALL BE LOCATED 48" ABOVE THE LEVEL OF THE FLOOR, WORKING PLATFORM, GROUND SURFACE OR SIDEWALK.

E. IF EMERGENCY WARNING SYSTEMS ARE REQUIRED THEY SHALL ACTIVATE A MEANS OF WARNINGTHE HEARING IMPAIRED. FLASHING VISUAL WARNING SHALL HAVE A FREQUENCY OF NOT MORE THAN 60 FLASHES PER MINUTE.

GENERAL NOTES

1. THESE DOCUMENTS AND THE IDEAS AND DESIGNS INCORPORATED HEREIN, AS AN INSTRUMENT OF PROFESSIONAL SERVICE, ARE THE PROPERTY OF SVA ARCHITECTS, AND ARE NOT TO BE USED, IN WHOLE OR IN PART FOR ANOTHER PROJECT WITHOUT THE WRITTEN AUTHORIZATION OF SVA ARCHITECTS.

2. THE WORK SHOWN ON THESE DRAWINGS AS EXISTING CONDITIONS WAS PREPARED FROM INFORMATION FURNISHED BY THE OWNER. WHILE THIS INFORMATION IS BELIEVED TO BE RELIABLE, SVA ARCHITECTS INC. IS NOT RESPONSIBLE FOR THE ACCURACY OR ADEQUACY OF ANY WORK SHOWN AS EXISTING NOR IS SVA ARCHITECTS INC. RESPONSIBLE FOR ANY ERRORS OR OMISSIONS WHICH MAY HAVE BEEN INCORPORATED INTO THESE DRAWINGS AS A RESULT.

3. EACH BIDDER SHALL POSSESS AT THE TIME OF BID A CLASS B OR THE APPROPRIATE CLASS C CONTRACTOR'S LICENSE PURSUANT TO PUBLIC CONTRACT CODE SECTION 3300 AND BUSINESS AND PROFESSIONS CODE SECTION 7028.15. THE SUCCESSFUL BIDDER MUST MAINTAIN THE LICENSE THROUGHOUT THE DURATION OF THIS CONTRACT.

4. FIRE SAFETY DURING CONSTRUCTION AND THE DURATION OF THIS CONTRACT:

A. GENERAL: FIRE SAFETY DURING CONSTRUCTION SHALL COMPLY WITH 2022 CALIFORNIA FIRE CODE TITLE 24, PART 9, CHAPTER 33.

B. ACCESS ROADS: FIRE DEPARTMENT ACCESS ROADS SHALL BE ESTABLISHED AND MAINTAINED IN ACCORDANCE WITH SECTION 1410.

C. WATER SUPPLY: WATER MAINS AND HYDRANTS SHALL BE OPERATIONAL IN ACCORDANCE WITH SECTION 1412.

D. BUILDING ACCESS: ACCESS TO BUILDINGS FOR THE PURPOSE OF FIREFIGHTING SHALL BE PROVIDED. CONSTRUCTION MATERIAL SHALL NOT BLOCK ACCESS TO BUILDINGS, HYDRANTS OR FIRE APPLIANCES.

E. ALTERATIONS OF BUILDINGS: SHALL COMPLY WITH APPLICABLE PROVISIONS OF SECTIONS 1405, 1411, 1413, AND 1415.

G. FIRE WATCH: MAINTAIN FIRE WATCH WHEN REQUIRED BY THE BUILDING OFFICIAL AND WHEN EXISTING FIRE PROTECTION SYSTEMS ARE SHUT DOWN FOR ALTERATIONS. FIRE WATCH SHALL REMAIN IN EFFECT UNTIL EXISTING FIRE PROTECTION SYSTEMS ARE RETURNED TO SERVICE OR AS ALLOWED BY THE BUILDING OFFICIAL.

5. PENETRATIONS TO FIRE RATED MATERIALS OR ASSEMBLIES SHALL BE RESTORED TO EQUAL RATING. FIRE STOP SYSTEMS AS LISTED BY UNDERWRITERS LABORATORIES SHALL BE INSTALLED PER FIRE RESISTANCE DIRECTORY. FIRE STOP SYSTEMS SHALL BE AS SPECIFIED.

6. STATEMENT (TITLE 24, PART 6): NONRESIDENTIAL ENERGY STANDARDS COMPLIANCE: THE DESIGN INDICATED HEREIN COMPLIES WITH THE REQUIREMENTS OF THE ENERGY CONSERVATION STANDARDS OF TITLE 24, PART 6, CALIFORNIA CODE OF REGULATIONS. THE PROPOSED BUILDING(S) WILL BE IN COMPLIANCE WITH THE ENERGY CONSERVATION STANDARDS PROVIDED IT (THEY) IS (ARE) BUILT ACCORDING TO THESE DRAWINGS AND SPECIFICATIONS AND PROVIDED ANY FUTURE IMPROVEMENTS ARE COMPLETED ACCORDING TO THE REQUIREMENTS OF TITLE 24, PART 6, CALIFORNIA CODE OF REGULATIONS. THESE PLANS AND SPECIFICATIONS HAVE BEEN PREPARED TO INCLUDE ALL SIGNIFICANT ENERGY CONSERVATION FEATURES REQUIRED FOR COMPLIANCE WITH THE STANDARDS. BUILDING AREAS THAT ARE UNCONDITIONED AND/OR NOT SUBJECT TO THE STANDARDS ARE INDICATED ON THE PLANS.

ENVELOPE MANDATORY MEASURES:

A. INSTALLED INSULATING MATERIALS SHALL HAVE BEEN CERTIFIED BY THE MANUFACTURER TO COMPLY WITH THE CALIFORNIA QUALITY STANDARDS FOR INSULATING MATERIAL.

B. ALL INSULATING MATERIALS SHALL BE INSTALLED IN COMPLIANCE WITH THE FLAME SPREAD RATING AND SMOKE DENSITY REQUIREMENTS OF [TITLE 24, PART 2, CALIFORNIA BUILDING CODE, SECTIONS 719 AND 2603.]

C. ALL EXTERIOR JOINTS AND OPENINGS IN THE BUILDING ENVELOPE THAT ARE POTENTIAL AND OBSERVABLE SOURCES OF AIR LEAKAGE SHALL BE CAULKED, GASKETED, WEATHERSTRIPPED OR OTHERWISE SEALED.

D. SITE CONSTRUCTED DOORS, AND WINDOWS SHALL BE CAULKED BETWEEN THE UNIT AND THE BUILDING, AND SHALL BE WEATHERSTRIPPED (EXCEPT FOR UNFRAMED GLASS DOORS AND FIRE DOORS).

E. MANUFACTURED DOORS AND WINDOWS INSTALLED SHALL HAVE AIR INFILTRATION RATES CERTIFIED BY THE MANUFACTURER IN ACCORDANCE WITH TITLE 24, PART 6, CALIFORNIA CODE OF REGULATIONS, SECTION 116(a)1.

F. MANUFACTURED FENESTRATION PRODUCTS IN THE ENVELOPE OF THE BUILDING, INCLUDING, BUT NOT LIMITED TO, WINDOWS, SLIDING GLASS DOORS, FRENCH DOORS, SKYLIGHTS, CURTAIN WALLS, AND GARDEN WINDOWS MUST BE LABELED FOR U-VALUE IN ACCORDANCE WITH THE (NFRC) NATIONAL FENESTRATION RATING COUNCIL'S INTERIM U-VALUE RATING PROCEDURE.

G. DEMISING WALL INSULATION SHALL BE INSTALLED IN ALL OPAQUE PORTIONS OF FRAMED WALLS (EXCEPT DOORS).

7. INSPECTOR OF RECORD REQUIREMENTS: A. ONE OR MORE INSPECTORS EMPLOYED BY THE OWNER IN ACCORDANCE WITH THE REQUIREMENTS OF TITLE 24 OF THE CALIFORNIA CODE OF REGULATIONS WILL BE ASSIGNED TO THE WORK. THE INSPECTORS DUTIES ARE SPECIFICALLY DEFINED IN SECTION 4-342 OF SAID TITLE 24, PART 1 AND IN ADDITION SHALL BE AS STIPULATED IN INTERPRETATION OF REGULATION DOCUMENT IR A-8. B. INSPECTOR SHALL BE CERTIFIED AS A CLASS [2] INSPECTOR THROUGH THE DIVISION OF THE STATE ARCHITECT INSPECTOR EXAMINATION PROGRAM. INSPECTOR SHALL ALSO BE SPECIFICALLY APPROVED BY THE DIVISION OF THE STATE ARCHITECT FOR THIS PROJECT AT LEAST 10 DAYS PRIOR TO THE START OF ANY WORK FOR THIS PROJECT.

8. ALL WORK SHOWN ON THESE DRAWINGS SHALL COMPLY WITH THE REQUIREMENTS OF TITLE 24, CALIFORNIA CODE OF REGULATIONS (CCR).

9. CHANGES TO THE APPROVED DRAWINGS AND SPECIFICATIONS SHALL BE MADE BY AN ADDENDUM OR A CCD APPROVED BY THE DIVISION OF THE STATE ARCHITECT.

10. GRADING PLANS, DRAINAGE IMPRPOVEMENTS, ROAD AND ACCESS REQUIREMENTS AND ENVIROMENTAL HEALTH CONCIDERATIONS SHALL COMPLY WITH ALL LOCAL ORDINANCES.

11. DRINKING WATER SHALL COMPLY WITH ALL LOCAL HEALTH DEPARTMENT REQUIREMENTS.

12. ALL CONSTRUCTION SHALL BE IN ACCORDANCE WITH THE REQUIREMENTS OF THE APPLICABLE CODES. ALL ENGINEERING SHALL COMFORM WITH ALL APPLICABLE MUNICIPAL, STATE AND FEDERAL REGULATIONS HAVING JURISDICTION INCLUDING ACCESSIBILITY STANDARDS AND ADA REQUIREMENTS.

13. DO NOT SCALE THE DRAWINGS. THE DRAWINGS ARE NOT NECESSARILY TO SCALE. THE CONTRACTOR SHALL VERIFY ALL CONDITIONS AND DIMENSIONS IN THE FIELD PRIOR TO BIDDING AND START OF CONSTRUCTION. IF DISCREPANCIES ARE FOUND, THE ARCHITECT SHALL BE NOTIFIED FOR CLARIFICATION BEFORE COMMENCING WORK.

14. ALL DIMENSIONS ARE TO FACE OF CONCRETE, FACE OF MASONRY UNITS, CENTERLINE OF COLUMNS AND BEAMS, OR FACE OF STUDS, UNLESS OTHERWIS NOTED. FINISH FLOOR ELEVATIONS ARE TO TOP OF CONCRETE SLAB OR TOP OF INTERIOR PAVING UNLESS NOTED OTHERWISE. CEILING HEIGHT DIMENSIONS ARE TO FINISHED SURFACES UNLESS NOTED OTHERWISE.

15. THE CIVIL, STRUCTURAL, MECHANICAL, PLUMBING, AND ELECTRICAL DRAWINGS ARE SUPPLEMENTARY TO THE ARCHITECTURAL DRAWINGS. IT SHALL BE THE RESPONSIBILITY OF THE CONTRACTOR TO CHECK WITH THE ARCHITECTURAL DRAWINGS BEFORE PROCEEDING WITH INSTALLATION OF CIVIL, STRUCTURAL MECHANICAL, PLUMBING, AND ELECTRICAL WORK. SHOULD THERE BE ANY DISCREPANCIES BETWEEN THE ARCHITECT'S AND THE CONSULTING ENGINEER'S DRAWINGS AND SPECIFICATIONS THAT WOULD CAUSE A CONFLICT, IT SHALL BE BROUGHT TO THE ARCHITECTS ATTENTION FOR CLARIFICATION PRIOR TO INSTALLATION OF SAID WORK. ANY WORK INSTALLED IN CONFLICT WITH THE ARCHITECTURAL DRAWINGS SHALL BE CORRECTED BY THE CONTRACTOR AT HIS EXPENSE AND AT NO ADDITIONAL COST TO THE OWNER OR ARCHITECT.

16. ALL SYMBOLS AND ABBREVIATIONS USED ON THE DRAWINGS ARE CONSIDERED TO BE CONSTRUCTION STANDARDS. IF THE CONTRACTOR HAS QUESTIONS REGARDING ABBREVIATIONS OR THEIR EXACT MEANING, THE ARCHITECT SHALL BE NOTIFIED FOR CLARIFICATION.

17. DETAILS MARKED "TYPICAL" SHALL APPLY IN ALL SIMILAR CASES UNLES SPECIFICALLY INDICATED OTHERWISE.

18. ALL RUBBISH AND DEBRIS RESULTING FROM DEMOLITION AND/OR NEW WORK SHALL BE DISPOSED OF OFF-SITE AND SHALL NOT BE ALLOWED TO ACCUMULATE.

19. SUBMIT SHOP DRAWINGS IN ACCORDANCE WITH SECTION 01 30 00 OF SPECIFICATIONS AND AS REQUIRED BY INDIVIDUAL SPECIFICATION SECTIONS.

20. NO SUBSTITUTIONS WILL BE ALLOWED WITHOUT PRIOR WRITTEN APPROVAL. REQUEST FOR SUBSTITUTION SHALL BE IN ACCORDANCE WITH SECTION 01 60 00 OF SPECIFICATIONS.

21. ALL METAL FRAMING MEMBERS SHALL BE SO ARRANGED AND SPACED AS TO PERMIT INSTALLATION OF PIPE CONDUITS AND DUCT-WORK WITH A MINIMUM OF CUTTING. SHAFT WALLS SHALL BE PROVIDED WITH NECESSARY FRAMES, BRACING, AND SEALANT AROUND THE OPENING.

22. OFFSET STUDS WHERE REQUIRED SO THAT FINISH WALL SURFACE WILL BE FLUSH.

24. DOORS IN RATED WALLS SHALL CONSIST OF SELF-CLOSING, SELF-LATCHING ASSEMBLIES WITH SMOKE AND DRAFT SEALS AT HEAD AND JAMBS. DOOR ASSEMBLY RATINGS SHALL BE AS INDICATED ON DOOR AND ACTIVATED BY SMOKE DETECTORS.

25. INSTALL METAL CORNER BEADS AT ALL EXPOSED GYPSUM BOARD EDGES INSTALL CASING BEADS WHEREVER GYPSUM BOARD, PLASTER, ETC. ABUTS DISSIMILAR FINISH MATERIAL AND PROVIDE SEALANT AS REQUIRED.

26. GYPSUM BOARD SHALL EXTEND TO UNDERSIDE OF STRUCTURE ABOVE AT ALL COLUMNS AND EXTERIOR PERIMETER WALLS UNLESS OTHERWISE NOTED. WELD FURRING CHANNELS TO STEEL COLUMN PRIOR TO FIRE PROOFING WHEN REQUIRED.

27. CONTRACTOR SHALL PROVIDE AND INSTALL ALL STIFFENERS, BRACING, BACK-UP PLATES, AND SUPPORTING BRACKETS REQUIRED FOR THE INSTALLATION OF ALL CASEWORK, STAIR RAILINGS, TOILET ROOM ACCESSORIES AND PARTITIONS, AND OF ALL WALL MOUNTED OR SUSPENDED MECHANICAL, ELECTRICAL, OR MISCELLANEOUS EQUIPMENT.

28. ALL GLAZING SHALL COMPLY WITH THE CONSUMER PRODUCT SAFETY COMMISSION REQUIREMENTS (C.P.S.C.), CFC, AND CBC.

29. CONTACT BETWEEN DISSIMILAR METAL SHALL BE PROTECTED.

30. ALL DOOR SIZES SHOWN ON DOOR SCHEDULE ARE OPENING SIZES. ALLOWANCE FOR THRESHOLDS, ETC. SHALL BE TAKEN OFF DOOR. ALL DOORS AND FRAME SHALL BE REINFORCED WHERE REQUIRED FOR CLOSERS, STOPS, AND HARDWARE.

31. ROOFING SYSTEM SHALL BEAR U.L. LISTING AS A CLASS "A" SYSTEM. ALL MANUFACTURED MATERIALS USED SHALL BEAR THE APPROPRIATE U.L. LABEL.

32. ALL WOOD TRIM, SPACER, FILLER, ETC., THROUGHOUT JOB SHOULD BE FIRE TREATED.

33. INSPECTION AND TESTING LABORATORY MUST BE IN THE EMPLOY OF THE OWNER, NOT THE CONTRACTOR.

34. MINIMUM HEADROOM CLEARANCE AT STAIRS SHALL BE 6'-8" MEASURED VERTICALLY FROM A PLANE PARALLEL AND TANGENT TO THE TREAD NOSING TO THE SOFFIT ABOVE AT ALL POINTS.

35. ALL EXIT DOORS SHALL BE OPERABLE FROM THE INSIDE WITHOUT THE USE OF A KEY OR ANY SPECIAL KNOWLEGE. LOCKING DEVICES SHALL BE OF AN APPROVED TYPE.

36. EXIT SIGNS SHALL HAVE 6" MINIMUM HEIGHT LETTERS AND SHALL CONFORM TO SECTION 1013 OF THE CALIFORNIA BUILDING CODE.

37. FURNISH AND INSTALL ACCESS DOORS, FIRE DAMPERS, ETC. IN CEILING AND WALL CONSTRUCTION LOCATED AS REQUIRED BY INSTALLATION OF MECHANICAL PLUMBING, AND ELECTRICAL WORK AND AS APPROVED BY THE ARCHITECT. PROVIDE RATED ASSEMBLIES IN RATED WALLS AND CEILINGS AND SHALL BE APPROVED BY BUILDING INSPECTOR PRIOR TO INSTALLATION.

38. FURNISH AND INSTALL EMERGENCY LIGHTING AS SPECIFIED AND INDICATED BUT IN NO CASE SHALL THE LIGHT VALUE BE LESS THAN ONE FOOT CANDLE AT FLOOR LEVEL IN ALL EXIT CORRIDORS AND STAIR SHAFTS (CBC SECTION 1008).

39. THERE SHALL BE NO TRENCHES OR EXCAVATIONS 5' OR MORE IN DEPTH INTO WHICH A PERSON IS REQUIRED TO DECEND UNLESS A PERMIT IS OBTAINED FROM THE STATE OF CALIFORNIA DIVISION OF INDUSTRIAL SAFETY PRIOR TO THE ISSUANCE OF A BUILDING OR GRADING PERMIT.

40. THE CONSTRUCTION OR DEMOLITION OF ANY BUILDING, STRUCTURE, SCAFFOLDING OR FALSEWORK MORE THAN 3 STORIES OR 36' IN HEIGHT REQUIRES A PERMIT FROM THE STATE OF CALIFORNIA DIVISION OF INDUSTRIAL SAFETY PRIOR TO THE ISSUANCE OF A BUILDING PERMIT.

41. GLASS DOORS, ADJACENT PANELS AND ALL GLAZED OPENINGS WITHIN 18" OF THE ADJACENT FLOOR SHALL BE GLASS APPROVED FOR IMPACT HAZARD.

42. ALL LIGHT GAUGE METAL STUDS AND BRACING SHALL COMPLY WITH 2016 CALIFORNIA BUILDING CODE.

43. INSTALLATION OF SHORING, UNDERPINNING, AND/OR SLOT CUTTING EXCAVATIONS SHALL BE PERFORMED UNDER THE CONTINUOUS INSPECTION AND APPROVAL OF THE GEOTECHNICAL ENGINEER.

44. ALL CONSTRUCTION SHALL PERFORMED IN ACCORDANCE WITH THE STATE CONSTRUCTION SAFETY ORDERS ENFORCED BY THE STATE DIVISION OF INDUSTRIAL SAFETY.

45. DIMENSIONS AND CONDITIONS AT THE JOB SITE SHALL BE VERIFIED BY ALL CONTRACTORS. IT IS THE RESPONSIBILITY OF THE CONTRACTOR TO EXAMINE THE EXISTING CONDITIONS PRIOR TO SUBMITTING BIDS TO THE OWNER SINCE PROPOSALS MUST TAKE INTO CONSIDERATION ALL SUCH CONDITIONS THAT MAY AFFECT THE WORK. DISCREPANCIES IN THE DRAWINGS OR BETWEEN THE DRAWINGS AND ACTUAL FIELD CONDITION SHALL BE REPORTED TO THE ARCHITECT. REVISED DRAWINGS OR INSTRUCTIONS SHALL BE ISSUED BY THE OWNER PRIOR TO THE INSTALLATION OF ANY WORK.

46. CONTRACTORS SHALL PROVIDE AND INSTALL ALL CONCRETE HOUSEKEEPING PADS FOR MECHANICAL AND ELECTRICAL EQUIPMENT, AS REQUIRED.

47. ALL GYPSUM WALL BOARD TO BE 5/8" THICK TYPE 'X' UNLESS OTHERWISE NOTED OR REQUIRED FOR SPECIFIC WALL CONSTRUCTION.

48. THERMAL INSULATION SHALL BE PROVIDED PER TYPICAL ASSEMBLIES NOTED ON DRAWINGS. REFER TO SPECS FOR PRODUCT INFORMATION.

49. PROVIDE TEMPERED GLASS AT LOCATIONS REQUIRED BY CBC SECTION 2406 AND BY OTHER APPLICABLE CODE.

50. ROOF DRAINS DISCHARGING WATER MUST BE CONDUCTED UNDER THE SIDEWALK

51. DOORS SHALL NOT PROJECT MORE THAN 7 INCHES INTO THE REQUIRED CORRIDOR WIDTH WHEN FULLY OPENED OR MORE THAN ONE HALF INTO THE REQUIRED WIDTH WHEN IN ANY POSITION. (CBC SECTION 1005.7.1)

52. PUBLIC HALLWAYS AND EXIT COURT PASSAGEWAYS TO HAVE 7'-0" CLEAR HEIGHT TO LOWEST PROJECTION. (CBC SECTION 1005.3)

53. OCCUPANCY LOAD SIGNS SHALL BE POSTED IN EACH CLASSROOM, ASSEMBLY ROOM, OR SIMILAR PURPOSE ROOM, HAVING AN OCCUPANT LOAD OF 50 OR MORE.

54. DUCT PENETRATIONS THROUGH PROTECTIVE ELEMENTS OF FIRE RATED CORRIDOR WALLS SHALL BE PROTECTED WITH A COMBINATON FIRE SMOKE DAMPERS PER CBC SECTION 714.

55. NO CHANGES ARE TO BE MADE ON THESE PLANS WITHOUT THE KNOWLEDGE OR CONSENT OF THE ARCHITECT/ENGINEER WHOSE SIGNATURE APPEARS HEREON.

56. THESE DRAWINGS DO NOT CONTAIN THE NECESSARY COMPONENTS FOR CONSTRUCTION SAFETY.

57. LOCATIONS OF ALL UTILITIES SHOWN ARE APPROXIMATE AND CONTRACTOR SHALL EXERCISE EXTREME CAUTION IN EXCAVATING AND TRENCHING ON THIS SITE TO AVOID INTERCEPTING EXISTING PIPING OR CONDUITS. IT SHALL BE THE RESPONSIBILITY OF THE CONTRACTOR TO LOCATE ALL EXISTING UTILITIES WHETHER SHOWN HEREON OR NOT AND TO PROTECT THEM FROM DAMAGE. THE ARCHITECT IS NOT RESPONSIBLE FOR THE LOCATION OF UNDERGROUND UTILITIES OR STRUCTURES WHETHER OR NOT SHOWN OR DETAILED AND INSTALLED BY ANY OTHER CONTRACT. THE CONTRACTOR SHALL IMMEDIATELY NOTIFY THE ARCHITECT SHOULD ANY UNIDENTIFIED CONDITIONS BE DISCOVERED. THE CONTRACTOR SHALL BEAR ALL EXPENSE OF REPAIR OR REPLACEMENT OF UTILITIES OR OTHER PROPERTY DAMAGED BY OPERATIONS IN CONJUNCTION WITH THE PROSECUTION OF THIS WORK.

58. THE PROJECT APPLICANT SHALL COMPLY WITH THE REQUIREMENTS OF THE ENGINEERING DIVISION FOR ALL PUBLIC IMPROVEMENTS.

59. A BUILDING ADDRESS IDENTIFICATION SHALL BE PROVIDED, THIS SHALL BE LEGIBLE AND PLACED IN A POSITION THAT IS VISIBLE FROM THE STREET OR ROAD FRONTING THE PROPERTY. ADDRESS IDENTIFICATION CHARACTER S SHALL CONTRAST WITH THEIR BACKGROUND. ADDRESS NUMBERS SHALL BE ARABIC NUMBERS OR ALPHABETICAL LETTERS. NUMBER SHALL NOT BE SPELLED OUT. EACH CHARACTER SHALL BE NOT LESS THAN 4 INCHES HIGH WITH A MINIMUM STROKE WIDTH OF 1/2". WHERE REQUIRED BY THE FIRE CODE OFFICIAL, ADDRESS INDENTIFICATION SHALL BE PROVIDED IN ADDITIONAL APPROVED LOCATION TO FACILITATE EMERGENCY RESPONSE. WHERE ACCESS IS BY MEANS OF A PRIVATE ROAD AND BUILDING CANNOT BE VIEWED FROM THE PUBLIC WAY, A MONUMENT, POLE OR OTHER SIGN OR MEANS SHALL BE USED TO IDENTIFY THE STRUCTURE. ADDRESS IDENTIFICATION SHALL BE MAINTAINED.

ABBREVIATIONS

A.B.	ANCHOR BOLT (S)
A.C.	ASPHALT CONCRETE PAVING
ACOUS	ACOUSTIC
AC. T.	ACOUSTICAL TILE
A.D.	AREA DRAIN
ADJ.	ADJUSTABLE
AGG	AGGREGATE
ALT.	ALTERNATE
ALUM.	ALUMINUM
APPROX.	APPROXIMATE
APT.	APARTMENT
ASPH.	ASPHALT
A.S.T.M.	AMERICAN SOCIETY OF TESTING MATERIALS
@	AT
B.B	BOTTOM OF BEAM
BD.	BOARD
BLK.	BLOCK
BLK'G.	BLOCKING
BM.	BEAM
BOT.	BOTTOM
BDRM.	BEDROOM
BR.	BROOM
CAB.	CABINET
CPT.	CARPET
C.B.	CATCH BASIN
CEM.	CEMENT
CEM. PLAS.	CEMENT PLASTER
C.	CENTER LINE
CER.	CERAMIC
C.I.	CAST IRON
CIRC.	CIRCULAR
CLG.	CEILING
CLR.	CLEAR
C.M.T.	CERAMIC MOSAIC TILE
COMPC.	COMPOSITION
CONC.	CONCRETE
CONT.	CONTINUOUS
CTSK.	COUNTERSUNK
CU. FT.	CUBIC FEET
CU. IN.	CUBIC INCH
CU. YD.	CUBIC YARD
D.	DRYER
D.F.	DOUGLAS FIR
D.F.	DRINKING FOUNTAIN
DIA.	DIAMETER
DIM.	DIMENSION
DN.	DOWN
DR.	DOOR
D.S.	DOWN SPOUT
DSP.	DRY STANDPIPE
DUP.	DUPLICATE
DW.	DISHWASHER
DWGS.	DRAWINGS
E.	EAST
EA.	EACH
E.J.	EXPANSION JOINT
ELEVA.	ELEVATOR
ELEV.	ELEVATION
ENCL.	ENCLOSURE
EQ.	EQUAL
EQUIP.	EQUIPMENT
E.W.W.M.	ELECTRIC WELDED WIRE MESH
EXPN.	EXPANSION
EXP.	EXPOSED
EXT.	EXTERIOR
EXTR.	EXTINGUISHER
FHS	FLAT HEAD SCREW
F.A.U.	FORCED AIR UNIT
F.F.	FINISH FLOOR
F.G.	FIXED GLASS
FHWS	FLAT HEAD WOOD SCREW
FIN.	FINISH
FIXT.	FIXTURE
FLASH.	FLASHING
FLR	FLOOR
FLR'G	FLOORING
FLUOR.	FLUORESCENT
F.O.C.	FACE OF CONCRETE
F.O.M.	FACE OF MASONRY
F.O.S.	FACE OF STUD
F.O.W.	FACE OF WALL
F.P.	FIRE PLACE
F.S.	FINISH SURFACE
FREQ.	FREQUENCY
FT.	FEET, FOOT
FTG.	FOOTING
FXC	FIRE EXTINGUISHER & CABINET
GA.	GAUGE
GALV.	GALVANIZED
G.I.	GALVANIZED IRON (STEEL)
GUN.	FUNITE
GYP.	GYPSUM
GYP. BD.	GYPSUM BOARD
H.B.	HOSE BIBB
H.C.	HOLLOW CORE
HD	DEAD
H.M.	HOWLLOW METAL
HORIZ.	HORIZONTAL
HR.	HOUR
I.	IRON
I.D.	INSIDE DIAMETER
INC.	INCORPORATED
INSUL.	INSULATION
INT	INTERIOR
JT.	JOINT
JST.	JOIST
K.	KITCHEN
LAM.	LAMINATED
LAM. PLAS.	LAMINATED PLASTIC
LAV.	LAVATORY
LT.	LIGHT
LVR.	LOUVER

M.C.	MEDICINE CABINET
MECH.	MECHANICAL
MEMB.	MEMBRANE
MET.	METAL
MFG.	MANUFACTURE
M.H.	MAN HOLE
MIN.	MINIMUM
MIR.	MIRROR
MTG.	MOUNTING
MTL.	METAL
N.	NORTH
NAT.	NATURAL
N.I.C.	NOT IN CONTRACT
NO.	NUMBER
N.T.S.	NOT TO SCALE
O/	OVER
O.C.	ON CENTER
O.D.	OVERFLOW DRAIN
OPP.	OPPOSITE
OV.	OVEN
OVHD.	OVERHEAD
PB.	PUSHBUTTON
PC	PULL CHAIN
PL	PLATE
P	PROPERTY LINE
PLAS.	PLASTER
PL. GLS.	PLATE GLASS
PLAST.	PLASTER
PLYWD.	PLYWOOD
PNL.	PANEL
PR.	PAIR
PRCST.	PRECAST
PREFAB.	PREFABRICATED
%	[ERCEMT
QRY.	QUARRY
QTY.	QUANTITY
RAD.	RADIUS
R.	RISER
R.A.G.	RETURN AIR GRILLE
RD.	ROAD
R.D.	ROOF DRAIN
RDWD.	REDWOOD
RECP.	RECEPTABLE
REF.	REFERENCE
REF.	REFRIGERATOR
REG.	REGISTER
REINF.	REINFORCEMENT
REQ'D	REQUIRED
RES. FLR.	RESILIENT FLOORING
RET.	RETAINING
RF.	ROOF
RF'G.	ROOFING
RM.	ROOM
RO.	ROUGH
R.O.	ROUGH OPENING
RUB.	RUBBER
R.B.	RUBBER (RESILIENT) BASE
S.	SOUTH
S.C.	SOLID CORE
S.D.	STORM DRAIN
SHT.	SHEET
SHT'G	SHEATHING
SIM.	SIMILAR
S&P	SHELF AND POLE
SPECS.	SPECIFICATIONS
SPRKL.	SPRINKLER
SQ. IN.	SQUARE INCH
SQ. FT.	SQUARE FOOT
ST.	STEEL
STOR.	STORAGE
STRUCT.	STRUCTURAL
SUSP.	SUSPENDED
SIM.	SIMILAR
S4S	SMOOTH FOUR SIDES
T	TREAD
T&B	TOP AND BOTTOM
T.B.	TOP OF BEAM
T.C.	TOP OF CURB
T.C.	TOP OF CONCRETE
T.G.	TOP OF GRATE
TEL	TELEPHONE
TEMP.	TEMPERED
T&G	TONGUE AND GROOVE
THK.	THICK
THRESH	THRESHOLD
T.P.	TOP OF PAVING
T.S.	TOP OF SHEATHING
T.W.	TOP OF WALL
TYP.	TYPICAL
UL	UNDERWRITER'S LABEL
ULT.	ULTIMATE
UNFIN.	UNFINISHED
U.R.F.	UNDER ROOF FRAMING
V.A.T.	VINYL ASBESTOS TILE
VENT.	VENTILATOR
VERT.	VERTICAL
VIT.	VITREOUS
VOL.	VOLUME
V.T.	VINYL TILE
W.	WEST
W/	WITH
W.C.	WATER CLOSET
WD.	WOOD
W	WIDE FLANGE (STEEL)
W.G.	WIRE GLASS
W.H.	WATER HEATER
W.I.	WROUGHT IRON
W/O	WITH OUT
WP.	WATERPROOFING
WS	WEATHERSTRIPPING
W.S.P.	WET STANDPIPE
WT.	WEIGHT
YD.	YARD

ARCHITECTURAL SYMBOLS LEGEND

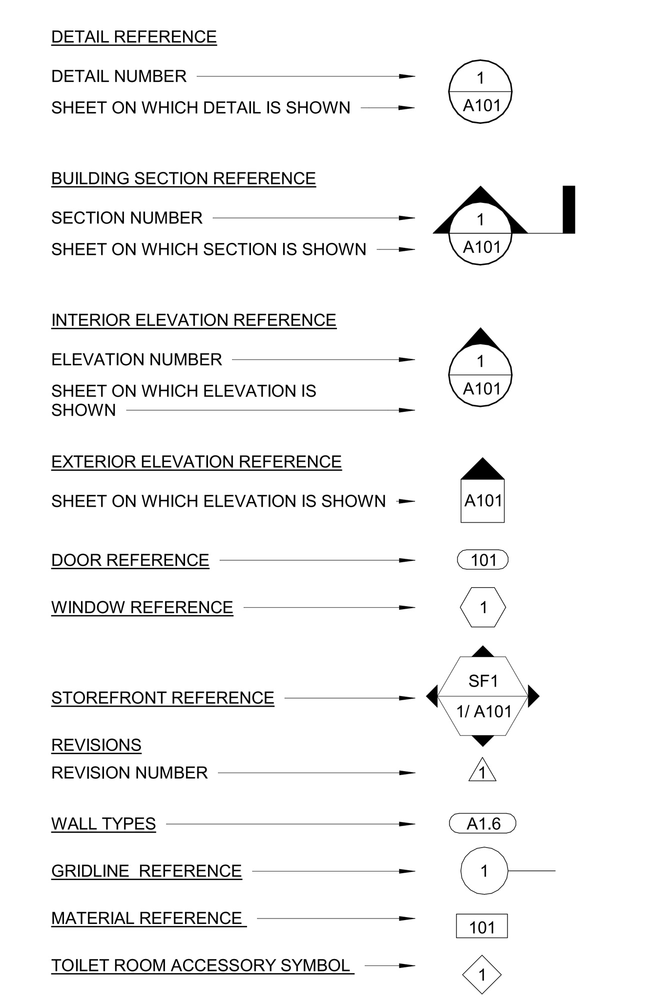

IDENTIFICATION STAMP
DIV. OF THE STATE ARCHITECT
APP: 01-120592 INC:
REVIEWED FOR
SS ☑ FLS ☑ ACS ☑
DATE: 7/11/2023

OWNER: San Rafael City Schools

PROJECT NAME: Venetia Valley - Middle School Restroom Addition

CLIENT ADDRESS: 177 N SAN PEDRO RD., SAN RAFAEL, CA 94903

LICENSED ARCHITECT
ROBERT M. SIMONS
No. C-18301
Jan 31, 2025
STATE OF CALIFORNIA

REVISIONS:

	DESCRIPTION	DATE
△		
△		
△		
△		
△		
△		
△		
△		
△		
△		
△		

PROJECT NO:	2022-40125
DATE ISSUED:	06.29.2023
SCALE:	1 1/2" = 1'-0"

GEN-3

GENERAL NOTES

SVA ARCHITECTS

6 HUTTON CENTRE DR, SUITE 1150 SANTA ANA, CA 92707
T 949.809.3380 WWW.SVA-ARCHITECTS.COM

THIS DOCUMENT CONTAINS INFORMATION PROPRIETARY TO SVA ARCHITECTS INC. AND IS FURNISHED IN CONFIDENCE FOR THE LIMITED PURPOSE OF EVALUATION, BIDDING OR REVIEW. THIS DOCUMENT OR ITS CONTENTS MAY NOT BE USED FOR ANY OTHER PURPOSE AND MAY NOT BE REPRODUCED OR DISCLOSED TO OTHERS WITHOUT THE PRIOR WRITTEN CONSENT OF SVA ARCHITECTS INC. ALL RIGHTS RESERVED, © COPYRIGHT 2018.

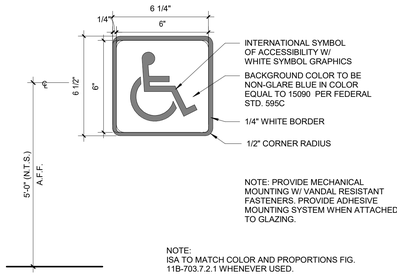

NOTE: PROVIDE MECHANICAL MOUNTING W/ VANDAL RESISTANT FASTENERS. PROVIDE ADHESIVE MOUNTING SYSTEM WHEN ATTACHED TO GLAZING.

NOTE:
ISA TO MATCH COLOR AND PROPORTIONS FIG. 11B-703.7.2.1 WHENEVER USED.

ACCESSIBLE ENTRANCE SIGN | 3" = 1'-0" | 8

TABLE *11B-703.3.1*
BRAILLE DIMENSIONS

MEASUREMENT RANGE	MINIMUM IN INCHES MAXIMUM IN INCHES
Dot base diameter	0.059 (1.5 mm) to 0.063 (1.6 mm)
Distance between two dots in the same cell[1]	*0.100 (2.5 mm)*
Distance between corresponding dots in adjacent cells[1]	*0.300 (7.6 mm)*
Dot height	0.025 (0.6 mm) to 0.037 (0.9 mm)
Distance between corresponding dots from one cell directly below[1]	0.395 (10 mm) to 0.400 (10.2 mm)

[1] Measured center to center.

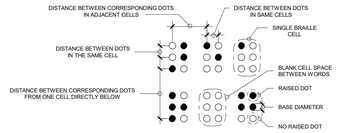

FIGURE 703.3.1
Braille Measurement

BRAILLE DIMENSIONS | 12" = 1'-0" | 12

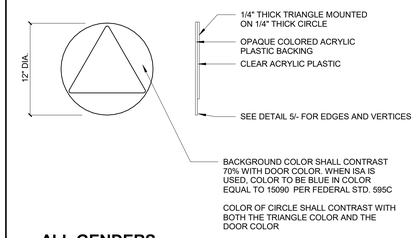

ALL GENDERS

CBC 11B-703.7.2.6.3
DSA BU 17-01

NOTE:
ATTACH SIGNS USING THREE FLATHEAD VANDAL RESISTANT COUNTERSUNK SCREWS AND ADHESIVE. SIGNS SHALL BE CENTERED ON THE DOOR AND MOUNTED BEING A 4'-10" MINIMUM AND A 5'-0" MAXIMUM ABOVE FINISH FLOOR LINE TO CENTER OF SIGN.

RESTROOM DOOR SIGNAGE - UNISEX | 1 1/2" = 1'-0" | 4

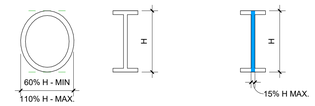

CHARACTER PROPORTIONS

RAISED CHARACTERS ON SIGNS SHALL BE SELECTED FROM FONTS WHERE THE WIDTH OF THE UPPERCASE LETTER "O" IS 60 PERCENT MINIMUM AND 110 PERCENT MAXIMUM OF THE HEIGHT OF THE UPPERCASE LETTER "I".

STROKE PROPORTION

STROKE THICKNESS OF THE UPPERCASE LETTER "I" SHALL BE 15% MAXIMUM OF THE HEIGHT OF THE CHARACTER.

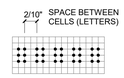

CONTRACTED GRADE 2 BRAILLE SHALL BE USED WHEREVER BRAILLE IS REQUIRED. INDIVIDUAL BRAILLE DOTS SHALL EACH BE DISTINCT AND SEPARATE. EACH DOT SHALL BE ROUNDED OR DOMED IN LIEU OF SQUARE SIDED AND FLAT TOPPED. *PER CBC TABLE 11B-703.3.1, DOT BASE DIAMETER SHALL BE 0.059" TO 0.063", DISTANCE BETWEEN TWO DOTS IN THE SAME CELL SHALL BE 0.100", DISTANCE BETWEEN CORRESPONDING DOTS IN ADJACENT CELLS SHALL BE 0.300", DOT HEIGHT SHALL BE 0.025" TO 0.037", AND DISTANCE BETWEEN CORRESPONDING DOTS FROM ONCE CELL DIRECTLY BELOW SHALL BE 0.395" TO 0.400"*

WIDTH TO HEIGHT PROPORTION TEMPLATE

BRAILLE SPACING TEMPLATE PER CALIFORNIA BUILDING CODE (CBC) AND CALIFORNIA CODE OF REGULATIONS (CCR), TITLE 24, PART 2.

TACTILE SIGNAGE TEMPLATE | 12" = 1'-0" | 7

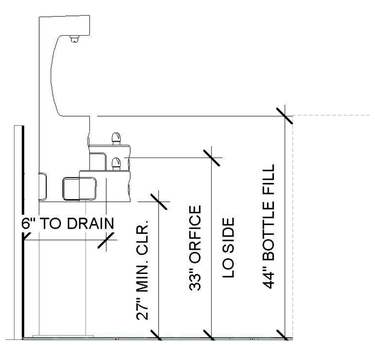

DRINKING FOUNTAIN - SIDE ELEVATION | 1" = 1'-0" | 14

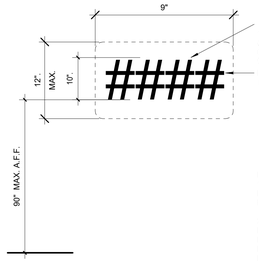

NUMBER TEXT:
10" HIGH LETTERS, RAISED MIN 1/32" ABOVE BACKGROUND; FONT: AVANT GARDE (SANS SERIF, UPPER CASE), WHITE

BACKGROUND COLOR TO MATCH (E) EXTERIOR SIGNAGE

NOTE:
1. PROVIDE MECHANICAL MOUNTING W/ VANDAL RESISTANT FASTENERS.

2. PRIMARY ENTRANCES TO RECEIVE BLDG SIGN NAME OR NUMBER , VERIFY W/ ADJACENT BLDGS FOR CONSECUTIVE LETTERS OR NUMBERS.
3. SIGNAGE TO MATCH (E) SIZE , TYPE AND COLOR -SHAPE SIGNAGE ON SITE

BUILDING IDENTIFICATION SIGNAGE | 3" = 1'-0" | 10

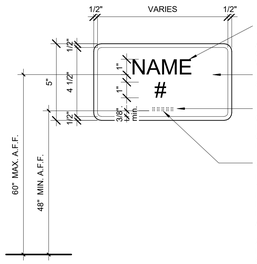

ROOM NAME AND NUMBER TEXT:
1" HIGH LETTERS, RAISED MIN 1/32" ABOVE BACKGROUND; FONT: AVANT GARDE (SANS SERIF, UPPER CASE), WHITE

BACKGROUND COLOR SAND (#287)

BRAILLE FONT:
CONTRACTED GRADE 2 BRAILLE DOTS 1/10" O.C., 2/10" BETWEEN CELLS, RAISED MIN. 1/400" ABOVE BACKGROUND. SEE12/GEN-4

CENTER TEXT & BRAILLE ON SIGN

NOTE:
1. PROVIDE MECHANICAL MOUNTING W/ VANDAL RESISTANT FASTENERS. PROVIDE ADHESIVE MOUNTING SYSTEM WHEN ATTACHED TO GLAZING.

2. PRIMARY ENTRANCES TO RECEIVE ROOM IDENTIFICATION SIGN; SECONDARY ENTRANCES TO HAVE ROOM NUMBER U.N.O., REFER ACCESSIBILITY PLAN AND DOOR SCHEDULE

3. SEE DETAIL 7/GEN-4 FOR TACTILE TEXT REQUIREMENTS

ROOM DESIGNATION SIGN | 3" = 1'-0" | 6

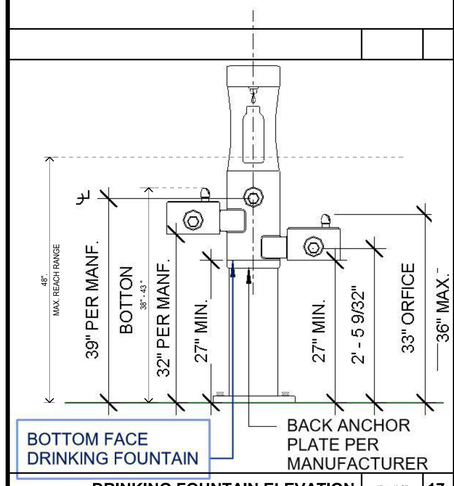

DRINKING FOUNTAIN ELEVATION | 1" = 1'-0" | 17

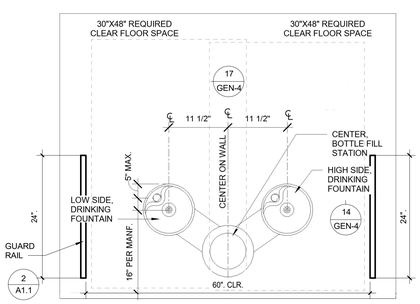

WATER FLOW NOTES: (PER CBC 11B-602.6)
- SPOUT SHALL FLOW WATER 4" MIN HIGH AND LOCATE 5" MAX. FROM FRONT OF UNIT. MEASURE ANGLE HORIZONTALLY RELATIVE TO FRONT FACE OF UNIT.
- WHERE SPOUTS LOCATED LESS THAN 3" FROM FRONT OF UNIT, ANGLE OF WATER STREAM SHALL BE 30 DEGREES MAX.
- WHERE SPOUTS ARE BETWEEN 3" MIN. AND 5" MAX. FROM FRONT OF UNIT, ANGLE OF WATER STREAL SHALL BE 15 DEGREES MAX.

DRINKING FOUNTAIN PLAN | 1" = 1'-0" | 13

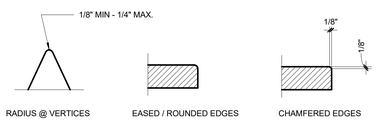

FIGURE 11B-703.7.2.6.4
EDGES AND VERTICES ON GEOMETRIC SYMBOLS

EDGES AND VERTICES ON SYMBOLS | 3" = 1'-0" | 5

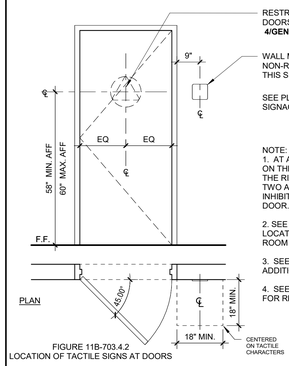

FIGURE 11B-703.4.2
LOCATION OF TACTILE SIGNS AT DOORS

RESTROOM SYMBOL @ ALL RESTROOM DOORS, SEE DETAIL **4/GEN-4**

WALL MOUNTED DESIGNATION SIGN @ NON-RESTROOMS - SEE **DETAIL 6/GEN-4** THIS SIGN IS OPTIONAL AT TOILET FACILITY

SEE PLANS AND DOOR SCHEDULES FOR SIGNAGE TYPE AT EACH DOOR

NOTE:
1. AT ALL DOUBLE DOORS, LOCATE SIGNAGE ON THE INACTIVE LEAF OF DOOR PAIR OR TO THE RIGHT OF THE RIGHT HAND DOOR IF TWO ACTIVE LEAFS. PROVIDE 90 DEGREE INHIBITOR TYPE CLOSER ON INACTIVE DOOR.

2. SEE SHEET 2.4/A11.2 FOR SIGNAGE LOCATION AND A52.1- FINISH SCHEDULE FOR ROOM NAMES PERTAINING FOR EACH DOOR.

3. SEE A52.1 - DOOR SCHEDULES FOR ADDITIONAL INFORMATION.

4. SEE REQUIRED ROOM SIGNAGE DETAILS FOR REQUIRED HEIGHT.

DOOR SIGNAGE | 1/2" = 1'-0" | 1

IDENTIFICATION STAMP
DIV. OF THE STATE ARCHITECT
APP: 01-120592 INC:
REVIEWED FOR
SS ☑ FLS ☑ ACS ☑
DATE: 7/11/2023

OWNER: San Rafael City Schools

PROJECT NAME: Venetia Valley - Middle School Restroom Addition

PROJECT ADDRESS: 177 N SAN PEDRO RD., SAN RAFAEL, CA 94903

LICENSED ARCHITECT
ROBERT M. SIMONS
No. C-18301
Jan 31, 2025
STATE OF CALIFORNIA

REVISIONS:

	DESCRIPTION	DATE
1		
2		
3		
4		
5		
6		
7		
8		
9		
10		

PROJECT NO:	2022-40125
DATE ISSUED:	06.29.2023
SCALE:	As indicated

GEN-4

PROJECT SIGNAGE- SITE DETAILS

SVA ARCHITECTS

2030 FRANKLIN ST. SUITE #210 OAKLAND, CA 94612
T 510.267.3180 WWW.SVA-ARCHITECTS.COM

THIS DOCUMENT CONTAINS INFORMATION PROPRIETARY TO SVA ARCHITECTS INC. AND IS FURNISHED IN CONFIDENCE FOR THE LIMITED PURPOSE OF EVALUATION, BIDDING OR REVIEW. THIS DOCUMENT OR ITS CONTENTS MAY NOT BE USED FOR ANY OTHER PURPOSE AND MAY NOT BE REPRODUCED OR DISCLOSED TO OTHERS WITHOUT THE PRIOR WRITTEN CONSENT OF SVA ARCHITECTS INC. ALL RIGHTS RESERVED. © COPYRIGHT 2018.

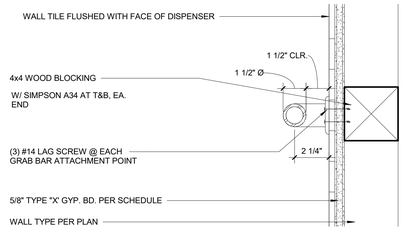

NOTE: THE GRAB BAR SHALL BE CAPABLE OF WITHSTANDING A SHEAR FORCE OF 250# WITHOUT BENDING OR PULLING OUT OF THE WALL

GRAB BARS 3" = 1'-0" **20**

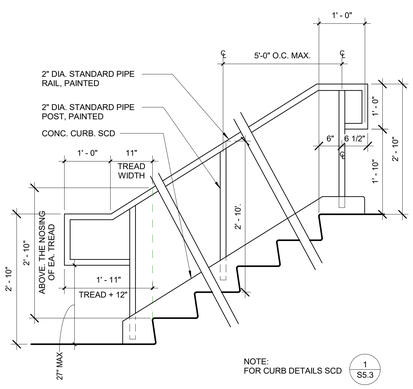

NOTE:
FOR CURB DETAILS SCD (S5.3)

STAIR RAILING 3/4" = 1'-0" **19**

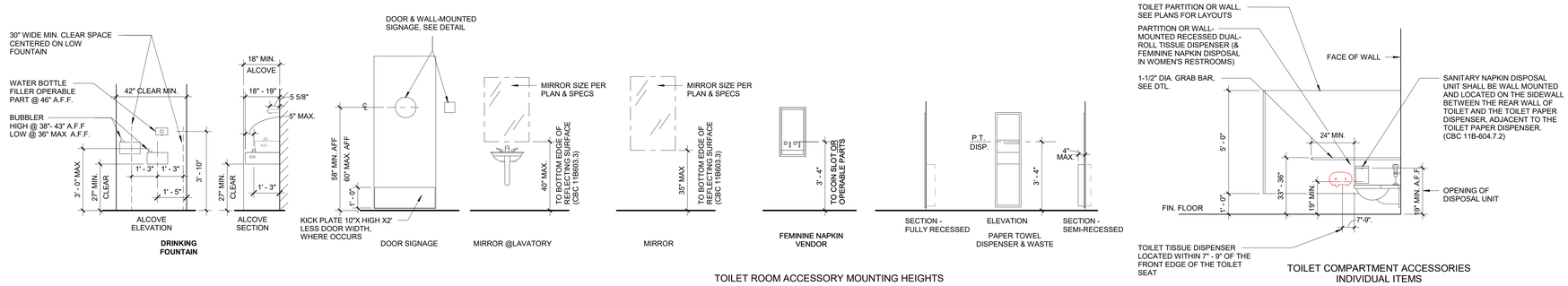

TOILET ROOM ACCESSORY MOUNTING HEIGHTS

TOILET COMPARTMENT ACCESSORIES INDIVIDUAL ITEMS

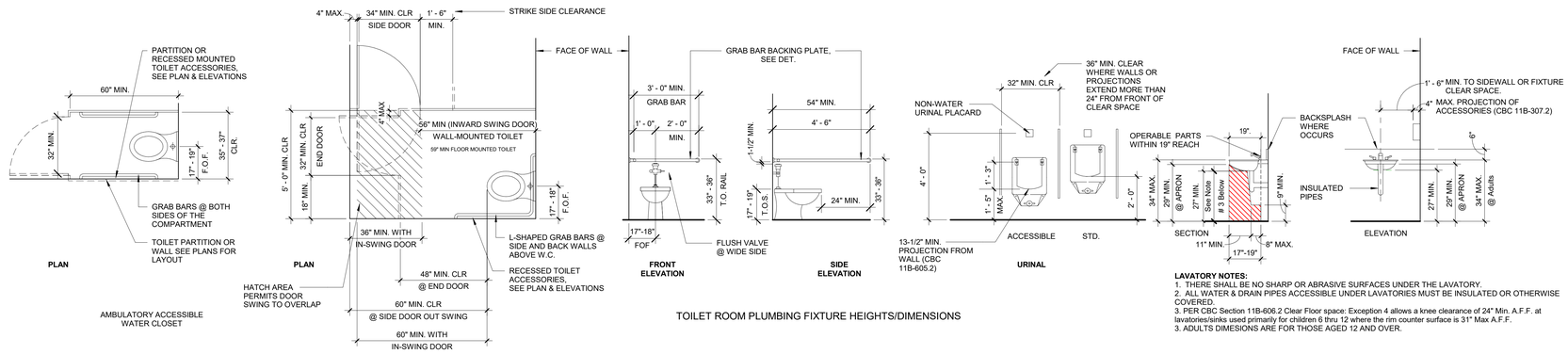

TOILET ROOM PLUMBING FIXTURE HEIGHTS/DIMENSIONS

LAVATORY NOTES:
1. THERE SHALL BE NO SHARP OR ABRASIVE SURFACES UNDER THE LAVATORY.
2. ALL WATER & DRAIN PIPES ACCESSIBLE UNDER LAVATORIES MUST BE INSULATED OR OTHERWISE COVERED.
3. PER CBC Section 11B-606.2 Clear Floor space: Exception 4 allows a knee clearance of 24" Min. A.F.F. at lavatories/sinks used primarily for children 6 thru 12 where the rim counter surface is 31" Max A.F.F.
3. ADULTS DIMESIONS ARE FOR THOSE AGED 12 AND OVER.

REACH RANGES AND MOUNTING HEIGHTS 3/8" = 1'-0" **2**

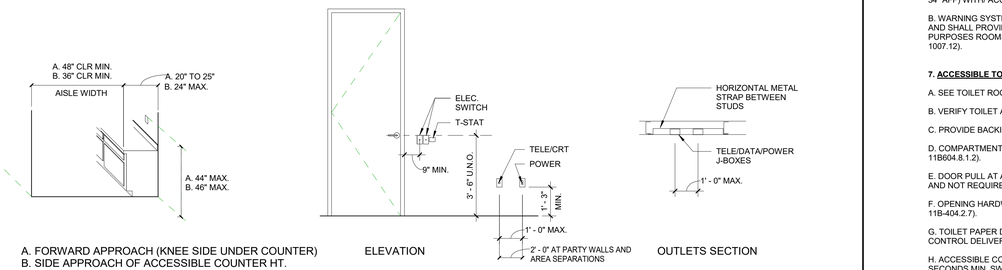

A. FORWARD APPROACH (KNEE SIDE UNDER COUNTER)
B. SIDE APPROACH OF ACCESSIBLE COUNTER HT.

REACH OVER OBSTRUCTION
TYP. WALL MOUNT DIMENSION

ELEVATION

OUTLETS SECTION

REACH RANGES AND MOUNTING HEIGHTS 3/8" = 1'-0" **14**

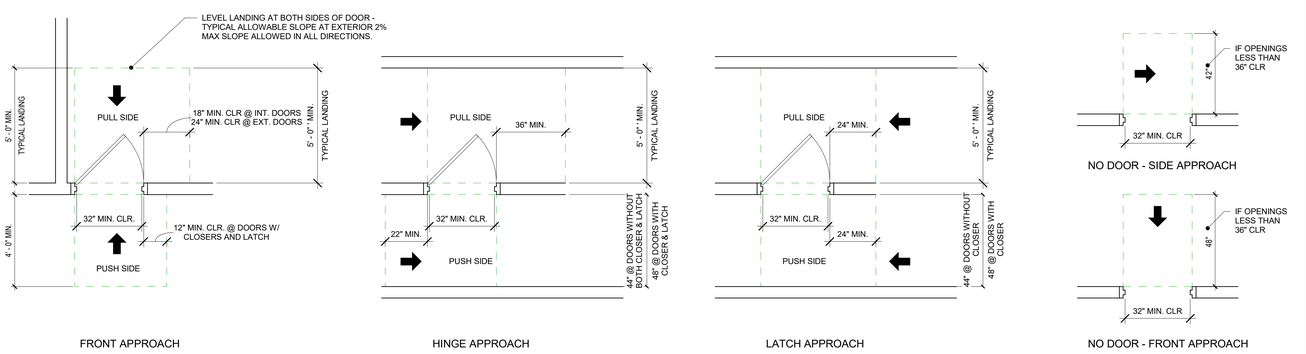

FRONT APPROACH

HINGE APPROACH

LATCH APPROACH

NO DOOR - SIDE APPROACH

NO DOOR - FRONT APPROACH

COMMON AREA ACCESSIBILITY NOTES 3/8" = 1'-0" **9**

6. ADDITIONAL COMPLIANCE REQUIREMENTS:

A. COUNTERTOPS AND WORK SURFACES SHALL BE ACCESSIBLE (HEIGHT BETWEEN 28" AND 34" AFF) WITH/ ACCESSIBLE CLEAR SPACE BELOW PER CBC 11B-203.9.

B. WARNING SYSTEMS SHALL COMPLY WITH NFPA 72 AND 72G (AS AMENDED BY CHAPTER 35) AND SHALL PROVIDE VISUAL ALARMS (I.E. STROBES) IN RESTROOMS, CORRIDORS, MULTI-PURPOSES ROOMS, LOBBIES, MEETING ROOMS, AND ANY OTHER COMMON USE ROOMS (CBC 1007.12).

7. ACCESSIBLE TOILET COMPARTMENTS:

A. SEE TOILET ROOM FLOOR PLAN FOR ACCESSIBLE TOILET STALL LOCATION.

B. VERIFY TOILET ACCESSORIES & TYPE OF PARTITION IN SPECS.

C. PROVIDE BACKING IN WALL & TOILET PARTITION FOR GRAB BAR ANCHORAGE.

D. COMPARTMENT DOOR TO PROVIDE MINIMUM 18" STRIKE-SIDE CLEARANCE (CBC 11B604.8.1.2).

E. DOOR PULL AT ACCESSIBLE COMPARTMENT SHALL COMPLY WITH CBC SECTION 11B-309.4 AND NOT REQUIRE GRASPING OR TWISTING.

F. OPENING HARDWARE IS CENTERED BETWEEN 34" AND 44" ABOVE FINISH FLOOR (CBC 11B-404.2.7).

G. TOILET PAPER DISPENSER SHALL PERMIT CONTINUOUS PAPER FLOW AND SHALL NOT CONTROL DELIVERY (CBC 11B-604.9.6).

H. ACCESSIBLE COMPARTMENT DOOR EQUIPPED WITH AN AUTOMATIC CLOSING DEVICES (3 SECONDS MIN. SWEEP TIME FROM OPEN POSITION OF 70 DEGREES TO A POINT 3" FROM THE LATCH).

I. SEE ACCESSIBILITY NOTES FOR ADDITIONAL REQUIREMENTS.

J. FLUSH CONTROL SHALL BE ON WIDE SIDE OF TOILET COMPARTMENT AT ALL ACCESSIBLE STALLS, TYP.

K. WHERE ONLY ONE TYPE OF TOILET FIXTURE OR ACCESSORY IS USED, IT SHALL BE POSITIONED FOR ACCESSIBILITY.

H. LOCATE TOWEL, SANITARY NAPKIN, AND WASTE RECEPTACLES WITH ALL OPERABLE PARTS NOT MORE THAN 40 INCHES FROM THE FLOOR.

I. LOCATE TOILET TISSUE DISPENSERS ON THE WALL OR PARTITION WITHIN 7" INCHES MIN. AND 9" INCHES MAX. OF THE FRONT EDGE OF THE TOILET SEAT AT A MINIMUM HEIGHT OF 19 INCHES (CBC 11B-604.7)

J. GRAB BARS, TUB AND SHOWER SEATS, FASTENERS AND MOUNTING DEVICES SHALL BE DESIGNED FOR 250 LB. PER LINEAR FOOT LOAD.

K. GRAB BARS (REFER DETAIL 20/GEN-5):

1) THE DIAMETER OR WIDTH OF THE GRIPPING SURFACE OF A GRAB BAR SHALL BE 1-1/4" TO 2" OR THE SHAPE SHALL PROVIDE EQUIVALENT GRIPPING SURFACE.
2) IF THE GRAB BARS ARE MOUNTED ADJACENT TO A WALL, THE SPACE BETWEEN THE WALL AND GRAB BARS SHALL BE 1-1/2".
3) A GRAB BAR AND ANY WALL OR OTHER SURFACE ADJACENT SHALL BE FREE OF ANY SHARP OR ABRASIVE ELEMENTS.
4) GRAB BARS SHALL NOT ROTATE WITHIN THEIR FITTINGS.
5) EDGES SHALL HAVE A MINIMUM RADIUS OF 1/8".

L. THERE SHALL BE NO SHARP OR ABRASIVE SURFACES UNDER LAVATORIES.

4. DRINKING FOUNTAINS: (REFER TO DETAIL)

A. ON ANY FLOOR WHERE DRINKING FOUNTAINS ARE PROVIDED, THERE SHALL BE A DRINKING FOUNTAIN THAT IS ACCESSIBLE TO INDIVIDUALS WHO USE WHEELCHAIRS AND ONE ACCESSIBLE TO THOSE WHO HAVE DIFFICULTY BENDING OR STOOPING ("HI-LO" FOUNTAIN) PER CBC 11B-211.2) WHERE MORE THAN ONE IS PROVIDED ON A FLOOR, 50% SHALL COMPLY WITH THESE REQUIREMENTS.(CBC 11B-211.3)

B. THE DRINKING FOUNTAIN SHALL BE A MINIMUM OF 18 INCHES AND A MAXIMUM OF 19 INCHES IN DEPTH AND THERE SHALL BE A CLEAR AND UNOBSTRUCTED KNEE SPACE UNDER THE DRINKING FOUNTAIN NOT LESS THAN 27 INCHES IN HEIGHT, 30 INCHES IN WIDTH, AND 8 INCHES IN DEPTH, THE DEPTH MEASUREMENT BEING TAKEN FROM THE FRONT EDGE OF THE FOUNTAIN. ADDITIONALLY THERE SHALL BE TOE CLEARANCE OF 9 INCHES IN HEIGHT ABOVE THE FLOOR, AND 17 INCHES IN DEPTH FROM THE FRONT EDGE OF THE FOUNTAIN. A SIDE APPROACH DRINKING FOUNTAIN IS NOT ACCEPTABLE.

C. THE BUBBLER SHALL BE ACTIVATED BY A CONTROL WHICH IS EASILY OPERATED BY A DISABLED PERSON SUCH AS A HAND-OPERATED LEVER TYPE LOCATED WITHIN T INCHES OF THE FRONT OF THE DRINKING FOUNTAIN, ETC. THE BUBBLER OUTLET ORIFICE SHALL BE LOCATED WITHIN 5" INCHES OF THE FRONT OF THE DRINKING FOUNTAIN AND SHALL BE WITHIN 36 INCHES OF THE FLOOR. THE WATER STREAM FROM THE BUBBLER SHALL BE SUBSTANTIALLY PARALLEL TO THE FRONT EDGE OF THE DRINKING FOUNTAIN. THE SPOUT SHALL PROVIDE A FLOW OF WATER THAT IS AT LEAST 4 INCHES HIGH SO AS TO ALLOW THE INSERTION OF A CUP OR GLASS UNDER THE FLOW OF WATER. THE FORCE REQUIRED TO ACTIVATE THE CONTROLS SHALL BE NO GREATER THAN 5 LB.

5. SWITCHES, CONTROLS AND ELECTRICAL OUTLETS: (REFER TO DETAIL)

A. ELECTRICAL AND COMMUNICATION SYSTEMS OUTLETS SHALL BE MOUNTED NOT LESS THAN 15 INCHES ABOVE THE FLOOR OR WORKING PLATFORM.

B. THE HIGHEST OPERABLE PART OF ALL CONTROLS, DISPENSERS, RECEPTACLES AND OTHER OPERABLE EQUIPMENT SHALL BE NOT LESS THAN 15 INCHES NOR MORE THAN 4 FEET ABOVE THE FLOOR OR WORKING PLATFORM AT BOTH FORWARD AND PARALLEL APPROACH.

C. IF REACH IS OVER AN OBSTRUCTION (FOR EXAMPLE, A BASE CABINET) BETWEEN 20" AND 25" IN DEPTH, THE MAXIMUM HEIGHT IS REDUCED TO 44" FOR FORWARD APPROACH. FOR SIDE APPROACH PROVIDED THE OBSTRUCTION IS NO MORE THAN 24" IN DEPTH, THE MAXIMUM HEIGHT IS REDUCED TO 46". THE OBSTRUCTION MAY NOT EXTEND MORE THAN 24" FROM THE WALL BENEATH THE CONTROL.

D. FIRE ALARM INITIATING DEVICES (BOXES) SHALL BE LOCATED 48" ABOVE THE LEVEL OF THE FLOOR, WORKING PLATFORM, GROUND SURFACE, OR SIDEWALK.

E. IF EMERGENCY WARNING SYSTEMS ARE REQUIRED THEY SHALL ACTIVATE A MEANS OF WARNING THE HEARING IMPAIRED. FLASHING VISUAL WARNING SHALL HAVE A FREQUENCY OF NOT MORE THAN 60 FLASHES PER MINUTE.

1. RAMPS AND STAIRWAYS
REFER TO ACCESSIBILITY NOTES ON SHEET GEN-2 AND ELSEWHERE IN THESE DRAWINGS

2. ENTRANCES AND DOORWAYS: (REFER TO DETAIL)

A. PRIMARY ENTRANCES TO BUILDINGS AND FACILITIES SHALL BE MADE ACCESSIBLE TO THE DISABLED.

B. RECESSED DOOR MATS SHALL BE ANCHORED TO PREVENT INTERFERENCE WITH WHEELCHAIRS.

C. ACCESSIBLE ENTRANCES SHALL BE IDENTIFIED WITH AT LEAST ONE SIGN (INTERNATIONAL SYMBOL OF ACCESSIBILITY) AND WITH ADDITIONAL DIRECTIONAL SIGNS AS REQUIRED VISIBLE FROM APPROACHING PEDESTRIAN WAYS.

D. THE FLOOR OR LANDING ON EACH SIDE OF AN ENTRANCE OR PASSAGE DOOR SHALL BE LEVEL AND CLEAR. THE LEVEL AND CLEAR AREA SHALL BE A MINIMUM 60" SQUARE IN THE DIRECTION OF THE DOOR SWING AND A MINIMUM 44" SQUARE OPPOSITE THE DIRECTION OF DOOR SWING. THE SQUARES SHALL BE MEASURED AT RIGHT ANGLES TO THE PLANE OF THE DOOR IN ITS CLOSED POSITION. SEE NOTE E BELOW FOR STRIKE SIDE CLEARANCES.

E. THE WIDTH OF THE LEVEL AND CLEAR AREA ON THE SIDE TO WHICH THE DOOR SWINGS SHAL EXTEND 24" PAST THE STRIKE EDGE OF THE DOOR FOR EXTERIOR DOORS AND 18" PAST THE STRIKE EDGE FOR INTERIOR DOORS.

F. THE FLOOR OR LANDING SHALL BE NOT MORE THAN 1/2" LOWER THAN THE THRESHOLD OF THE DOORWAY. CHANGE IN LEVEL BETWEEN 1/4" AND 1/2" SHALL BE BEVELED NO GREATER THAN 1:2.

G. THE SPACE BETWEEN TWO CONSECUTIVE DOOR OPENINGS IN A VESTIBULE, SERVING OTHER THAN A REQUIRED EXIT STAIRWAY, MUST HAVE AT LEAST 48" OF CLEAR SPACE FROM ANY DOOR OPENING INTO THE VESTIBULE WHEN THE DOOR IS OPEN 90 DEGREES FROM ITS CLOSED POSITION. DOOR IN SERIES MUST SWING IN THE SAME DIRECTION OR AWAY FROM THE SPACE BETWEEN THE DOORS.

H. WHERE A PAIR OF DOORS, MANUALLY OR AUTOMATICALLY OPERATED, IS UTILIZED, AT LEAST ONE OF THE DOORS SHALL PROVIDE A CLEAR, UNOBSTRUCTED OPENING 32" WIDE WITH THE LEAF POSITIONED 90 DEGREES FROM ITS CLOSED POSITION.

I. THE BOTTOM 10" OF ALL DOORS EXCEPT AUTOMATIC AND SLIDING SHALL HAVE A SMOOTH, UNINTERRUPTED SURFACE TO ALLOW THE DOOR TO OPEN BY A WHEELCHAIR FOOTREST WITHOUT CREATING A TRAP OR HAZARDOUS CONDITION. WHERE NARROW FRAME DOORS ARE USED A 10" HIGH SMOOTH PANEL SHALL BE INSTALLED ON THE PUSH SIDE OF THE DOOR, WHICH WILL ALLOW THE DOOR TO BE OPENED BY A WHEELCHAIR FOOTREST WITHOUT CREATED A TRAP OR HAZARDOUS CONDITION.

J. MAXIMUM EFFORT TO OPERATED DOORS SHALL NOT EXCEED 5 LB. SUCH PULL OR PUSH EFFORT SHALL BE APPLIED AT RIGHT ANGLES TO HINGED DOORS AND AT THE CENTER PLANE OF SLIDING OR FOLDING DOORS. COMPENSATING DEVICES OR AUTOMATIC DOOR OPERATORS MAY BE UTILIZED TO MEET THE ABOVE STANDARDS. WHEN FIRE DOORS ARE REQUIRED, THE MAXIMUM EFFORT TO OPERATE THE DOOR MAY BE INCREASED TO THE MAXIMUM ALLOWABLE BY THE APPROPRIATE ADMINISTRATIVE AUTHORITY, NOT TO EXCEED 15 POUNDS.

3. SANITARY FACILITIES: (REFER TO DETAIL)

A. WATER CLOSET COMPARTMENTS SHALL BE EQUIPPED WITH A DOOR THAT HAS AN AUTOMATIC CLOSING DEVICE, AND SHALL HAVE A CLEAR UNOBSTRUCTED OPENING WIDTH OF 32" INCHES WHEN LOCATED AT THE END AND 34 INCHES WHEN LOCATED AT THE SIDE WITH THE DOOR POSITION AT AN ANGLE OF 90 DEGREES AWAY FROM ITS CLOSED POSITION.

B. TOILET FLUSH CONTROLS SHALL BE OPERABLE WITH ONE HAND, AND SHALL NOT REQUIRE TIGHT GRASPING, PINCHING, OR TWISTING OF THE WRIST. CONTROLS FOR FLUSH VALVES SHALL BE MOUNTED ON THE WIDE SIDE OF THE TOILET AREAS, NO MORE THAN 44" INCHES ABOVE THE FLOOR. THE FORCE REQUIRED TO ACTIVATE CONTROLS SHALL BE NO GREATER THAN 5 POUNDS PER FOOT.

C. WHERE URINALS ARE PROVIDED AT LEAST ONE WITH A RIM PROJECTING A MINIMUM OF 13-1/2 INCHES FROM THE WALL AND AT A MAXIMUM OF 17 INCHES ABOVE THE FLOOR SHALL BE PROVIDED.

D. URINAL FLUSH CONTROLS SHALL BE OPERABLE WITH ONE HAND, AND SHALL NOT REQUIRE TIGHT GRASPING, PINCHING, OR TWISTING OF THE WRIST AND SHALL BE MOUNTED NO MORE THAN 44 INCHES ABOVE THE FLOOR. THE FORCE REQUIRED TO ACTIVE CONTROLS SHALL BE NO GREATER THAN 5 POUNDS PER FOOT.

E. ALL WATER AND DRAIN PIPES UNDER LAVATORIES SHALL BE INSULATED OR OTHERWISE COVERED.

F. FAUCET CONTROLS AND OPERATING MECHANISMS SHALL BE OPERABLE WITH ONE HAND AND SHALL NOT REQUIRE TIGHT GRASPING, PINCHING, OR TWISTING OF THE WRIST. THE FORCE REQUIRED TO ACTIVATE CONTROLS SHALL BE NO GREATER THAN 5 POUNDS PER FOOT. LEVEL OPERATED, PUSH-TYPE AND ELECTRONICALLY CONTROLLED MECHANISMS ARE EXAMPLES OF ACCEPTABLE DESIGNS. SELF-CLOSING VALVES ARE ALLOWED IF THE FAUCET REMAINS OPEN FOR AT LEAST 10 SECONDS.

G. MIRRORS OVER LAVATORIES AND SINKS SHALL BE MOUNTED WITH THE BOTTOM EDGE OF GLASS NOT MORE THAN 40 INCHES ABOVE THE FLOOR.

COMMON AREA ACCESSIBILITY NOTES 12" = 1'-0" **1**

IDENTIFICATION STAMP
DIV. OF THE STATE ARCHITECT
APP: 01-120592 INC:
REVIEWED FOR
SS ☑ FLS ☑ ACS ☑
DATE: 7/11/2023

OWNER: San Rafael City Schools

PROJECT NAME: Venetia Valley - Middle School Restroom Addition

PROJECT ADDRESS: 177 N SAN PEDRO RD., SAN RAFAEL, CA 94903

LICENSED ARCHITECT
ROBERT M. SIMONS
No. C-18301
Jan 31, 2025
STATE OF CALIFORNIA

REVISIONS:

	DESCRIPTION	DATE
1		
2		
3		
4		
5		
6		
7		
8		
9		
10		

PROJECT NO:	2022-40125
DATE ISSUED:	06.29.2023
SCALE:	As indicated

GEN-5

ACCESSIBILITY DETAILS

SVA ARCHITECTS
2030 FRANKLIN ST. SUITE #210 OAKLAND, CA 94612
T 510.267.3180 WWW.SVA-ARCHITECTS.COM

THIS DOCUMENT CONTAINS INFORMATION PROPRIETARY TO SVA ARCHITECTS INC. AND IS FURNISHED IN CONFIDENCE FOR THE LIMITED PURPOSE OF EVALUATION, BIDDING OR REVIEW. THIS DOCUMENT OR ITS CONTENTS MAY NOT BE USED FOR ANY OTHER PURPOSE AND MAY NOT BE REPRODUCED OR DISCLOSED TO OTHERS WITHOUT THE PRIOR WRITTEN CONSENT OF SVA ARCHITECTS INC. ALL RIGHTS RESERVED. © COPYRIGHT 2018.

IMPROVEMENT PLANS

FOR

VENETIA VALLEY SCHOOL - RESTROOM ADDITION

177 N SAN PEDRO ROAD

SAN RAFAEL, CA 94903

GENERAL CIVIL NOTES

GENERAL:

1. ALL PERMITS WILL BE SECURED BY THE OWNER AND IT IS THE RESPONSIBILITY OF THE CONTRACTOR TO COMPLY WITH THE CONDITIONS AND REQUIREMENTS OF THE PERMITS.
2. THE CONTRACTOR SHALL TAKE EFFECTIVE ACTION TO PREVENT THE FORMATION OF AN AIRBORNE DUST NUISANCE AND SHALL BE RESPONSIBLE FOR DAMAGE RESULTING FROM THEIR FAILURE TO DO SO.
3. THE CONTRACTOR SHALL PROVIDE ALL LIGHTS, SIGNS, BARRICADES, FLAGMEN OR OTHER DEVICES NECESSARY TO PROVIDE FOR SAFETY.
4. THE CONTRACTOR SHALL POST EMERGENCY TELEPHONE NUMBERS FOR THE POLICE, FIRE AMBULANCE, AND THOSE AGENCIES RESPONSIBLE FOR MAINTENANCE OF UTILITIES IN THE VICINITY OF THE JOB SITE.
5. LENGTHS OF SANITARY SEWERS AND STORM DRAINS SPECIFIED ARE HORIZONTAL DISTANCES AS MEASURED FROM CENTERS OF STRUCTURES ROUNDED TO THE NEAREST FOOT.
6. EXISTING UNDERGROUND UTILITIES AND IMPROVEMENTS ARE SHOWN IN THEIR APPROXIMATE LOCATIONS BASED UPON RECORD INFORMATION AVAILABLE TO THE ENGINEER AT THE TIME OF PREPARATION OF THESE PLANS. LOCATIONS MAY NOT HAVE BEEN VERIFIED IN THE FIELD AND NO GUARANTEE IS MADE AS TO THE ACCURACY OR COMPLETENESS OF THE INFORMATION SHOWN. THE CONTRACTOR SHALL PERFORM AT THEIR EXPENSE A FIELD OBSERVATION LOCATING ALL EXISTING UTILITIES INCLUDING ELEVATIONS AND NOTIFY THE OWNER AND THE ENGINEER OF ANY CONFLICTS PRIOR TO CONSTRUCTION. IT SHALL BE THE RESPONSIBILITY OF THE CONTRACTOR TO DETERMINE THE EXISTING LOCATIONS OF UTILITIES SHOWN ON THESE PLANS. ANY ADDITIONAL COST INCURRED AS A RESULT OF THE CONTRACTOR'S FAILURE TO VERIFY LOCATIONS OF THE EXISTING UTILITIES PRIOR TO BEGINNING CONSTRUCTION SHALL BE BORNE BY THE CONTRACTOR.
7. CONTRACTOR TO VERIFY ALL EXISTING INVERT ELEVATIONS FOR STORM DRAIN AND SANITARY SEWER CONSTRUCTION PRIOR TO ANY WORK. ALL WORK FOR STORM DRAIN AND SANITARY SEWER INSTALLATION SHALL BEGIN AT THE DOWNSTREAM CONNECTION POINT. THIS WILL ALLOW FOR ANY NECESSARY ADJUSTMENTS TO BE MADE PRIOR TO THE INSTALLATION OF THE ENTIRE LINE. IF THE CONTRACTOR FAILS TO BEGIN AT THE DOWNSTREAM CONNECTION POINT AND WORKS UPSTREAM, HE SHALL PROCEED AT HIS OWN RISK AND BE RESPONSIBLE FOR ANY ADJUSTMENTS NECESSARY.
8. CONTRACTOR SHALL UNCOVER AND EXPOSE ALL EXISTING UTILITY AND SEWER LINES WHERE THEY ARE CROSSED ABOVE OR BELOW BY THE NEW FACILITY BEING CONSTRUCTED IN ORDER TO VERIFY THE GRADE AND TO ASSURE THAT THERE IS SUFFICIENT CLEARANCE. PIPES SHALL NOT BE STRUNG NOR TRENCHING COMMENCED UNTIL ALL CROSSINGS HAVE BEEN VERIFIED FOR CLEARANCE. IF THE CONTRACTOR FAILS TO FOLLOW THIS PROCEDURE HE WILL BE SOLELY RESPONSIBLE FOR ANY EXTRA WORK OR MATERIAL REQUIRED IF MODIFICATIONS TO THE DESIGN ARE NECESSARY.
9. ALL EXISTING UTILITIES AND IMPROVEMENTS THAT BECOME DAMAGED DURING CONSTRUCTION SHALL BE COMPLETELY RESTORED TO THE SATISFACTION OF THE OWNER AT THE CONTRACTOR'S SOLE EXPENSE.
10. CONTRACTOR TO TAKE NECESSARY PRECAUTIONARY MEASURES TO PREVENT SOIL EROSION AND SEDIMENTATION. EXISTING AND PROPOSED DRAINAGE STRUCTURES TO BE TEMPORARILY COVERED WITH FILTER FABRIC OR EQUAL UNTIL SURROUNDING PAVEMENT IS INSTALLED.
11. ANY RELOCATION OF UTILITIES SHALL BE COORDINATED WITH THE OWNER AND CONDUCTED IN ACCORDANCE WITH ANY AND ALL REQUIREMENTS OF THE OWNER, INCLUDING FEES, BONDS. PERMITS AND WORKING CONDITIONS, ETC. THE OWNER SHALL PAY THE FEES, BONDS, AND FILE THE APPROPRIATE PERMITS FOR ALL SUCH RELOCATION WORK. ALL ON- SITE UTILITY WORK IS THE RESPONSIBILITY OF THE CONTRACTOR (MATERIALS AND INSTALLATION).
12. IF ARCHAEOLOGICAL MATERIALS ARE UNCOVERED DURING GRADING. TRENCHING OR OTHER EXCAVATION, EARTHWORK WITHIN 100 FEET OF THESE MATERIALS SHALL BE STOPPED UNTIL A PROFESSIONAL ARCHAEOLOGIST WHO IS CERTIFIED BY THE SOCIETY OF CALIFORNIA ARCHAEOLOGY (SCA) AND/OR THE SOCIETY OF PROFESSIONAL ARCHAEOLOGY (SOPA) HAS HAD AN OPPORTUNITY TO EVALUATE THE SIGNIFICANCE OF THE FIND AND SUGGEST APPROPRIATE MITIGATION MEASURES, IF THEY ARE DEEMED NECESSARY.
13. THESE PLANS DO NOT SPECIFY NOR RECOMMEND THE USE OR INSTALLATION OF ANY MATERIAL OR EQUIPMENT WHICH IS MADE FROM, OR WHICH CONTAINS ASBESTOS FOR USE IN THE CONSTRUCTION OF THESE IMPROVEMENTS. ANY PARTY INSTALLING OR USING SUCH MATERIALS OR EQUIPMENT SHALL BE SOLELY RESPONSIBLE FOR ALL INJURES. DAMAGES, OR LIABILITIES, OF ANY KIND, CAUSED BY THE USE OF SUCH MATERIALS, OR EQUIPMENT. NOTIFY OWNER WHEN DISCOVERING ASBESTOS MATERIALS. REFER TO SPECIFICATION "HAZARDOUS MATERIALS PROCEDURES AND CONTROL' AND 'HAZARDOUS MATERIALS ABATEMENT AND CONTROL."
14. THE CONTRACTOR SHALL MEET AND FOLLOW ALL (NPDES) NATIONAL POLLUTANT DISCHARGE ELIMINATION SYSTEM REQUIREMENTS IN EFFECT AT THE TIME OF CONSTRUCTION.
15. SHOULD IT APPEAR THAT THE WORK TO BE DONE OR ANY MATTER RELATIVE THERETO IS NOT SUFFICIENTLY DETAILED OR EXPLAINED ON THESE PLANS, THE CONTRACTOR SHALL CONTACT THE ENGINEER FOR SUCH FURTHER EXPLANATIONS AS MAY BE NECESSARY.
16. CONTRACTOR SHALL ARRANGE, INSTALL, AND PAY FOR ANY TEMPORARY UTILITIES, INCLUDING BUT NOT LIMITED TO TELEPHONE, ELECTRIC, SEWER, WATER, ETC.. THE CONTRACTOR IS TO COORDINATE ANY SUCH UTILITY NEEDS WITH THE OWNER.
17. ALL SITE AREAS SHALL BE GRADED AT 1% MINIMUM FOR DRAINAGE UNLESS OTHERWISE NOTED OR ALONG FLOWLINES OF CONCRETE LINED GUTTERS AND VALLEY GUTTERS.
18. ESTIMATED EARTHWORK QUANTITIES SHOWN ARE APPROXIMATE ONLY AND SHOWN FOR THE PURPOSES OF ESTIMATING GRADING PERMIT FEES, HOHBACH-LEWIN ASSUMES NO LIABILITY FOR THE ACCURACY OF THESE QUANTITIES.
19. WHERE EXISTING STRUCTURES ARE TO REMAIN IN CONSTRUCTION ZONE AREA, CONTRACTOR SHALL ADJUST RIMS OF THESE STRUCTURES, I.E. CATCH BASINS, VALVE BOXES, CLEAN OUTS, UTILITY BOXES, ETC. TO NEW FINISH GRADE.
20. CONTRACTOR SHALL CONTACT UNDERGROUND SERVICE ALERT FOR NORTHERN CALIFORNIA AT LEAST 48 HOURS (2 WORKING DAY) PRIOR TO COMMENCEMENT OF CONSTRUCTION. (800) 227-2600.
21. THE ORGANIC MATERIAL COVERING THE SITE SHALL BE STRIPPED AND STOCKPILED. THE STRIPPINGS SHALL BE USED TO BACKFILL ALL LANDSCAPE PLANTERS AND ROUGH GRADE MOUND AREAS, AS SHOWN ON LANDSCAPE DRAWINGS, TO WITHIN 1" OF GRADES SHOWN. EXCESS STRIPPINGS AND EXCAVATED MATERIAL SHALL BE REMOVED FROM THE SITE BY THE CONTRACTOR.
22. ADJUSTMENTS TO PAD ELEVATIONS OR PARKING LOT GRADES TO ACHIEVE EARTHWORK BALANCE SHALL BE MADE ONLY WITH APPROVAL OF THE ENGINEER.
23. COMPACTION TO BE DETERMINED USING ASTM D1557-LATEST EDITION.
24. STORM DRAIN PIPES DESIGNATED AS SD FROM 4" TO 24" IN DIAMETER SHALL BE SDR-35 PVC. (GREEN-TITE PIPE BY MANVILLE OR APPROVED EQUAL), CLASS HDPE SMOOTH INTERIOR PIPE PER ASTM D3212 HANCOR SURE-LOK WT PIPE OR APPROVED EQUAL WITH CLASS 1 BACKFILL OR DUCTILE IRON PIPE DIP. IF SPECIFIED ON PLANS. NO MATERIAL SUBSTITUTE SHALL BE ALLOWED FOR DUCTILE IRON PIPE. ANY PIPES LARGER THAN 24" IN DIAMETER SHALL BE CLASS III REINFORCED CONCRETE PIPE RCP. PVC PIPE EXCEEDING 24" DIAMETER SHALL ONLY BE USED WHEN APPROVED BY MANUFACTURER IN THIS JURISDICTION.
25. PROPOSED SPOT GRADES (ELEVATIONS) SHOWN HEREON ARE FINISHED PAVEMENT GRADES, NOT TOP OF CURB GRADES, UNLESS NOTED OTHERWISE.
26. THE CONTRACTOR SHALL VERIFY THE CONTENTS AND THICKNESS OF THE BUILDING SLAB SECTION (IE: CONCRETE, SAND, ROCK) WITH THE STRUCTURAL PLANS AND THE ELEVATIONS SHOWN HEREON PRIOR TO COMMENCEMENT OF GRADING.
27. ALL WORK SHALL BE PERFORMED IN ACCORDANCE WITH APPLICABLE O.S.H.A. REGULATIONS.
28. CONSTRUCTION CONTRACTOR AGREES THAT IN ACCORDANCE WITH GENERALLY ACCEPTED CONSTRUCTION PRACTICES, CONSTRUCTION CONTRACTOR WILL BE REQUIRED TO ASSUME SOLE AND COMPLETE RESPONSIBILITY FOR JOB SITE CONDITIONS DURING THE COURSE OF CONSTRUCTION OF THE PROJECT, INCLUDING SAFETY OF ALL PERSONS AND PROPERTY; THAT THIS REQUIREMENT SHALL BE MADE TO APPLY CONTINUOUSLY AND NOT BE LIMITED TO NORMAL WORKING HOURS, AND CONSTRUCTION CONTRACTOR FURTHER AGREES TO DEFEND, INDEMNIFY AND HOLD DESIGN PROFESSIONAL HARMLESS FROM ANY AND ALL LIABILITY, REAL OR ALLEGED, IN CONNECTION WITH THE PERFORMANCE OF WORK ON THIS PROJECT, EXCEPTING LIABILITY ARISING FROM THE SOLE NEGLIGENCE OF DESIGN PROFESSIONAL.
29. WHERE OFF-SITE DRIVEWAY APPROACHES ARE TO BE CONSTRUCTED THE ON-SITE DRIVEWAY SHALL NOT BE CONSTRUCTED UNTIL THE OFF-SITE IMPROVEMENTS ARE INSTALLED. THE ON-SITE DRIVEWAY SHALL CONFORM TO THE COMPLETED OFF-SITE DRIVEWAY.

GRADING NOTES:

1. UNDERGROUND UTILITY LOCATIONS SHOWN HEREON WERE TAKEN FROM RECORD DATA. NO GUARANTEE IS MADE OR IMPLIED AS TO THE ACCURACY OF SUCH RECORD DATA. NO EXCAVATIONS WERE MADE TO CONFIRM LOCATIONS. CONTRACTORS ARE CAUTIONED TO CONTACT U.S.A. UNDERGROUND AND TO EXERCISE EXTREME CARE IN VERIFYING ALL LOCATIONS PRIOR TO COMMENCING EXCAVATIONS OR OTHER WORK WHICH MAY AFFECT THESE UTILITIES.
2. IRRIGATION LATERALS, PARKING LOT LIGHTING WIRING AND SIGNAL WIRING NOT SHOWN. VERIFY LOCATION BEFORE COMMENCING TRENCHING. REPLACE OR REPAIR IMMEDIATELY WHERE BROKEN TO PROVIDE UNINTERRUPTED SERVICE.
3. ALL FINISH GRADES SHOWN ARE FINISH GRADE ELEVATIONS UNLESS NOTED OTHERWISE.

UTILITY NOTES:

1. THIS SURVEY IS NOT INTENDED TO REPRESENT THE EXACT LOCATIONS, SIZES OR EXTENT OF THE UTILITIES WITHIN THE AREA ENCOMPASSED BY THIS SURVEY. THEREFORE, IT IS THE RESPONSIBILITY OF THE OWNER AND/OR CONTRACTOR TO VERIFY THE LOCATION, SIZE AND EXTENT OF ANY EXISTING UTILITIES PRIOR TO DESIGN OR CONSTRUCTION. CONTRACTORS ARE CAUTIONED TO CONTACT U.S.A. UNDERGROUND AND TO EXERCISE EXTREME CARE IN VERIFYING ALL LOCATIONS PRIOR TO COMMENCING EXCAVATIONS OR OTHER WORK WHICH MAY AFFECT THESE UTILITIES.
2. IRRIGATION LATERALS, PARKING LOT LIGHTING WIRING AND SIGNAL WIRING NOT SHOWN. VERIFY LOCATION BEFORE COMMENCING TRENCHING. REPLACE OR REPAIR IMMEDIATELY WHERE BROKEN TO PROVIDE UNINTERRUPTED SERVICE.
3. UTILITY ABANDONMENT/REMOVAL: DISCONNECT AND CAP PIPES AND SERVICES TO REMAIN. REMOVE ALL PORTIONS OF ALL UTILITIES WITHIN NEW BUILDING FOOTPRINT AND DISPOSE OF OFF-SITE. OTHERWISE ABANDON IN PLACE UNLESS NOTED OTHERWISE.
4. NOTIFY THE ENGINEER IMMEDIATELY OF ANY UTILITIES ENCOUNTERED THAT ARE NOT SHOWN ON THE DRAWINGS. PRESERVE AND REPAIR ANY UTILITIES THAT ARE DAMAGED AND THAT ARE TO REMAIN.
5. CONTRACTOR IS RESPONSIBLE FOR COORDINATING ALL CROSSINGS OF NEW UTILITIES WITH EACH OTHER, AND WITH EXISTING UTILITIES. VERIFY EXISTING PIPE LOCATION AND INVERT PRIOR TO INSTALLING NEW UTILITIES. NOTIFY THE ENGINEER IMMEDIATELY OF ANY DISCREPANCIES OR DEVIATIONS.
6. PRIOR TO CONNECTING TO EXISTING UTILITIES FIELD VERIFY LOCATION 6. & INVERT OR DEPTH PRIOR TO INSTALLING NEW PIPE OR EQUIPMENT.
7. EACH BUILDING WATER SERVICE CONNECTION SHALL BE WITH VALVE AND VALVE BOX SET AT GRADE.
8. ALL BUILDING SEWER LATERALS SHALL BE WITH CLEANOUT TO GRADE.
9. ALL CATCH BASINS WITHIN VEHICULAR AREAS SHALL BE TRAFFIC RATED FOR H20 VEHICULAR LOADS. FOR CATCH BASINS IN WALKWAY AREAS, INCLUDING EXISTING CATCH BASINS, USE HEEL PROOF AND ADA GRATE.

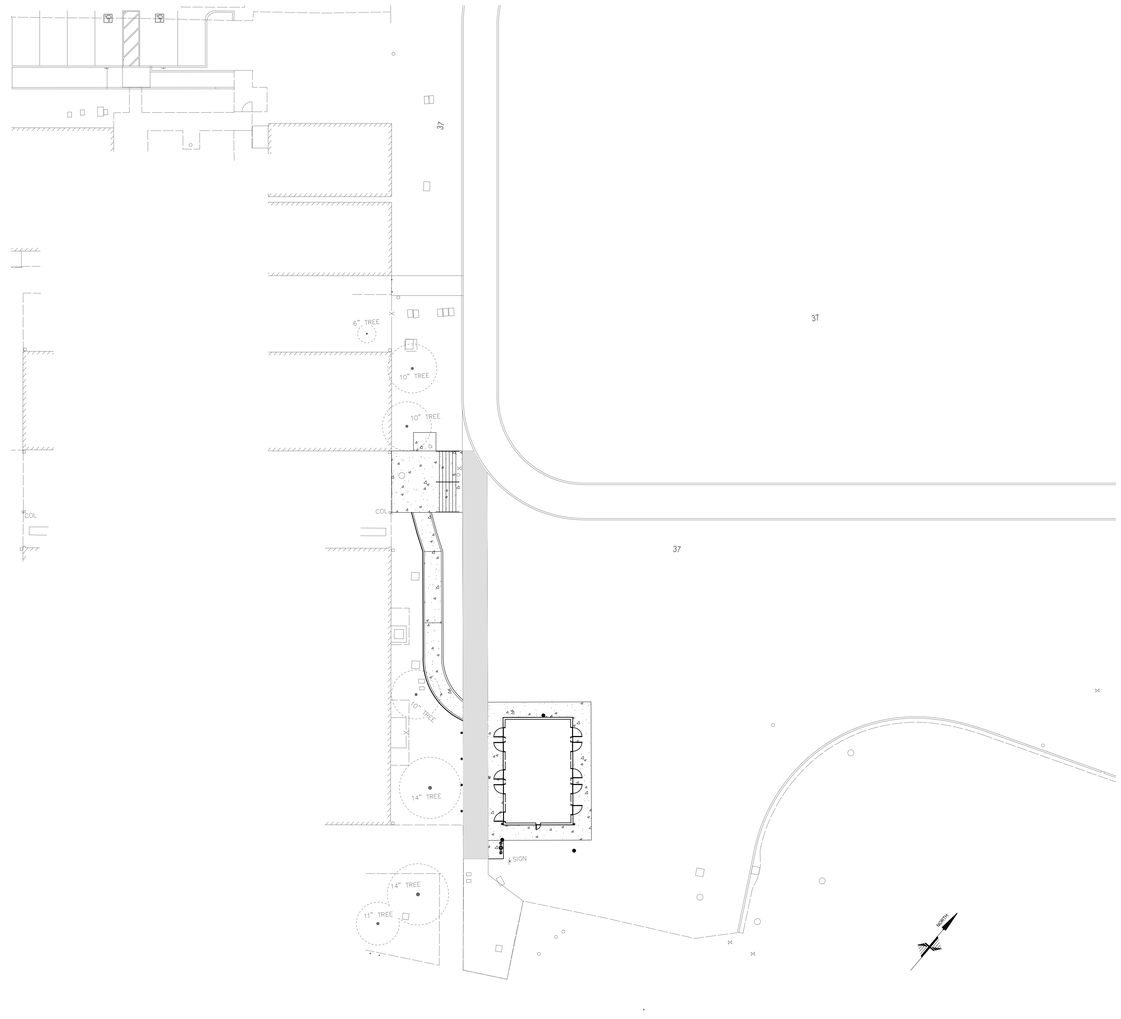

ADA COMPLIANCE:

1. ALL NEW WORK SHALL CONFORM TO TITLE 24 OF THE CALIFORNIA ADMINISTRATIVE CODE AND THE AMERICANS WITH DISABILITIES ACT 2010 ADA STANDARDS FOR ACCESSIBLE DESIGN, AND ANY LOCAL OR STATE AMENDMENTS THEREOF.
2. ALL NEW CURB RAMPS SHALL NOT EXCEED A SLOPE OF 1:12 (8.33%).
3. ALL NEW ENTRANCE WALKS TO THE BUILDINGS SHALL NOT EXCEED A SLOPE OF 1:20 (5%) LONGITUDINALLY UNLESS RAILINGS ARE PROVIDED IN WHICH CASE THE SLOPE SHALL NOT EXCEED 1:12 (8.33%). SEE ARCHITECTURAL PLANS FOR RAILING REQUIREMENTS.
4. LANDINGS SHALL BE PROVIDED AT PRIMARY ENTRANCES TO BUILDINGS WITH A 2% MAXIMUM SLOPE THE LANDINGS SHALL HAVE A MINIMUM WIDTH OF 60" AND A MINIMUM DEPTH OF 60" WHEN THE DOOR OPENS INTO THE BUILDING, AND 42" PLUS THE WIDTH OF THE DOOR WHEN THE DOOR OPENS ONTO THE LANDING.
5. RAMPS ARE DEFINED AS ANY WALKWAY BETWEEN SLOPES OF 1:20 (5%) AND 1:12 (8.33%), AND SHALL HAVE A MINIMUM WIDTH OF 48" AND A MAXIMUM CROSS-SLOPE OF 2%. RAMPS EXCEEDING 30" VERTICAL DROP SHALL HAVE INTERMEDIATE (2% MAXIMUM SLOPE) LANDINGS HAVING A MINIMUM LENGTH IN THE DIRECTION OF TRAVEL OF 60". BOTTOM LANDINGS AND LANDINGS AT CHANGES IN RAMP DIRECTION SHALL HAVE A MINIMUM LENGTH OF 72".
6. MAXIMUM CROSS-SLOPE ON ANY SIDEWALK OR RAMP SHALL BE 2%. MAXIMUM SLOPE IN ANY DIRECTION WITHIN PARKING STALLS DESIGNATED AS ACCESSIBLE PARKING STALL SHALL BE 2%.

GEOTECHNICAL CRITERIA:

1. ALL WORK INCLUDING GRADING, TRENCHING, COMPACTION, AND SUBBASES SHALL FOLLOW THE RECOMMENDATIONS OF THE PROJECT GEOTECHNICAL REPORT.
2. ALL ENGINEERED FILL SHALL HAVE A MINIMUM RELATIVE COMPACTION PER PROJECT GEOTECHNICAL REPORT.

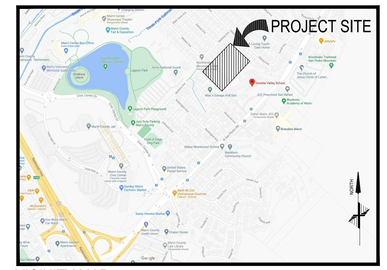

VICINITY MAP

LEGEND

BOUNDARY LINES

- CENTER LINE
- EASEMENT LINE
- PROPERTY LINE
- ADJACENT PROPERTY LINE

MISCELLANEOUS LINES

- SIDEWALK
- LIP OF GUTTER
- FENCE-WIRE
- BIORETENTION AREA

UTILITY LINES

- E — ELECTRIC
- FO — FIBER OPTIC
- FS — FIRE SERVICE
- G — GAS LINE
- IRR — IRRIGATION LINE
- JT — JOINT TRENCH
- NG — NITROGEN GAS
- OH — OVERHEAD
- RW — RECYCLED WATER
- STORM DRAIN
- SS — SANITARY SEWER
- T — TELEPHONE
- W — WATER

UTILITY LEGEND

- FIRE HYDRANT
- WATER VALVE
- WATER METER
- STORM DRAIN MANHOLE
- BACKFLOW PREVENTER
- CATCH BASIN
- AREA DRAIN
- CLEANOUT TO GRADE
- FIRE DEPARTMENT CONNECTION

ABBREVIATIONS

AB	AGGREGATE BASE
AC	ASPHALTIC CONCRETE
AD	AREA DRAIN
ATT	AT&T
BC	BACK OF CURB
BFP	BACKFLOW PREVENTER
BLDG	BUILDING
BOL	BOLLARD
BOW	BACK OF WALK
BW	BOTTOM OF WALL
BW/FS	BOTTOM OF WALL/FINISHED SURFACE
C	CONCRETE
CATV	CABLE TV
CB	CATCH BASIN
CONC	CONCRETE
COTG	CLEANOUT TO GRADE
DI	DRAIN INLET
DS	DOWN SPOUT
E	ELECTRIC OR EAST
EW	EACH WAY
EX.	EXISTING
(E)	EXISTING
ELEC	ELECTRIC
ESMT	EASEMENT
G	GAS
GB	GRADE BREAK
FF	FINISHED FLOOR
FG	FINISHED GRADE
FL	FLOWLINE
FM	FORCE MAIN
FNC	FENCE
FS	FINISHED SURFACE
GRN	GROUND
HP	HIGH POINT
INV	INVERT
JP	JOINT POLE
LF	LINEAR FEET
LIP	LIP OF GUTTER
LT	LIGHT
M	MAPS
N	NORTH
NE	NORTHEAST
NTS	NOT TO SCALE
NW	NORTHWEST
OC	ON CENTER
OH	OVERHEAD
OR	OF RECORD
PERF	PERFORATED PIPE
PGE	PACIFIC GAS & ELECTRIC
POC	POINT OF CONNECTION
PV	PAVEMENT
RC	RELATIVE COMPACTION
RW	RECYCLED WATER
RIM	RIM OF UTILITY OBJECT
S	SOUTH
SD	STORMDRAIN
SE	SOUTHEAST
SJWC	SAN JOSE WATER COMPANY
SS	SANITARY SEWER
SL	STREET LIGHT
SW	SOUTHWEST
T	TREE
TC	TOP OF CURB
TW	TOP OF WALL
TW/FS	TOP OF WALL/FINISHED SURFACE
TYP.	TYPICAL
UON	UNLESS OTHERWISE NOTED
USA	UNDERGROUND SERVICE ALERT
VG	VALLEY GUTTER
W	WATER/WEST/WITH
WM	WATER METER
WTR	WATER
WV	WATER VALVE

SHEET INDEX

C1.0	COVER SHEET
C1.1	NOTES
C2.0	DEMOLITION PLAN
C3.0	GRADING AND DRAINAGE PLAN
C4.0	UTILITY PLAN
C5.0	EROSION CONTROL PLAN

CALL BEFORE YOU DIG — USA — 800-227-2600

IDENTIFICATION STAMP
DIV. OF THE STATE ARCHITECT
APP: 01-120592 INC:
REVIEWED FOR
SS ☑ FLS ☑ ACS ☑
DATE: 7/11/2023

OWNER: SAN RAFAEL CITY SCHOOLS

PROJECT NAME: VENETIA VALLEY SCHOOL MIDDLE SCHOOL RESTROOM ADDITION

CLIENT ADDRESS: 177 N SAN PEDRO RD, SAN RAFAEL, CA 94903

SEAL:

REGISTERED PROFESSIONAL ENGINEER — DANIEL G. HOHBACH — NO. C38406 — CIVIL — STATE OF CALIFORNIA

REVISIONS:

	DESCRIPTION	DATE
1		
2		
3		
4		
5		
6		
7		
8		
9		
10		

DATE ISSUED:

PROJECT NO:

SCALE: AS SHOWN

SHEET NUMBER:

C1.0

SHEET TITLE:

COVER SHEET

HOHBACH-LEWIN, INC.
STRUCTURAL & CIVIL ENGINEERS
260 Sheridan Avenue, Suite 150
Palo Alto, CA 94306
(650) 617-5930, Fax (650) 617-5932

HOHBACH-LEWIN #14997.33

Plot Date: Jun 5, 2023 - 10:16 AM

CAUTION:

1. THE LOCATIONS, SIZES AND/OR DEPTHS OF EXISTING UNDERGROUND UTILITIES AS SHOWN ON THIS PLAN WERE OBTAINED FROM SOURCES OF VARYING RELIABILITY. THE CONTRACTOR IS CAUTIONED THAT ONLY ACTUAL EXCAVATION WILL REVEAL THE TYPES, EXTENT, SIZES, LOCATIONS AND DEPTHS OF SUCH UNDERGROUND UTILITIES. (A REASONABLE EFFORT HAS BEEN MADE TO LOCATE AND DELINEATE ALL KNOWN UNDERGROUND UTILITIES). CONTRACTOR SHALL VERIFY LOCATION AND DEPTH PRIOR TO ANY EXCAVATION OR IMPROVEMENT.
2. CONTRACTOR SHALL CONTACT UNDERGROUND SERVICE ALERT FOR LOCATION OF UNDERGROUND UTILITIES AT LEAST 48 HOURS PRIOR TO COMMENCEMENT OF CONSTRUCTION-PHONE (800) 642-2444. CONTRACTOR SHALL VERIFY ALL EXISTING UTILITIES PRIOR TO BEGINNING ANY WORK ON THIS SITE.
3. THESE DRAWINGS DO NOT ADDRESS CONTRACTOR MEANS, METHODS OR PROCESSES THAT MAY BE ASSOCIATED WITH ANY TOXIC SOILS IF FOUND ON SITE. THE CONTRACTOR IS RESPONSIBLE FOR COMPLYING WITH ALL CITY AND COUNTY STANDARDS AND APPROPRIATE REGULATIONS IF TOXIC SOILS ARE ENCOUNTERED. CONTRACTOR MUST NOTIFY THE OWNER'S PROJECT MANAGER IMMEDIATELY IF ANY SOILS ARE EVEN SUSPECTED OF BEING CONTAMINATED.

GENERAL SITE NOTES:

1. CONTRACTOR SHALL VISIT THE SITE PRIOR TO BIDDING ON THIS WORK AND CONSIDER THE EXISTING CONDITIONS AND SITE CONSTRAINTS IN THE BID. CONTRACTOR SHALL BE IN THE POSSESSION OF AND FAMILIAR WITH ALL APPLICABLE GOVERNING AGENCIES STANDARD DETAILS AND SPECIFICATIONS PRIOR TO SUBMITTING OF A BID.
2. ALL WORK IN THE PUBLIC RIGHT-OF-WAY SHALL CONFORM TO ALL APPLICABLE GOVERNING AGENCIES STANDARD DETAILS & SPECIFICATIONS.
3. CONTRACTOR AND HIS/HER SUBCONTRACTORS SHALL BE IN POSSESSION AND FAMILIAR WITH THE GEOTECHNICAL REPORT BY: MILLER PACIFIC ENGINEERING GROUP DATED: 4/27/2017, JOB NO. 779.253.
4. PRIOR TO BEGINNING WORK, AND AFTER INITIAL HORIZONTAL CONTROL STAKING, CONTRACTOR SHALL FIELD CHECK ALL ELEVATIONS MARKED WITH (E) AND REPORT ANY DISCREPANCIES GREATER THAN 0.05' TO OWNER'S PROJECT MANAGER.
5. DAMAGE TO ANY EXISTING SITE IMPROVEMENTS, UTILITIES AND/OR SERVICES TO REMAIN SHALL BE RESPONSIBILITY OF THE CONTRACTOR. CONTRACTOR SHALL REPAIR AND/OR REPLACE IN KIND.
6. CONTRACTOR SHALL REPLACE ALL STRUCTURES AND GRATE LIDS FOR VAULTS, CATCH BASINS, ETC.., WITH VEHICULAR-RATED STRUCTURES IN ALL TRAFFIC ACCESSIBLE AREAS.
7. CONTRACTOR SHALL MAINTAIN THE EXISTING SITE IN A SAFE AND USABLE MANNER SUCH THAT EMERGENCY VEHICLE ACCESS IS AVAILABLE AT ALL TIMES. CONTRACTOR TO SUPPLY, INSTALL AND MAINTAIN ALL NECESSARY FENCING, GATES, SIGNAGE, TEMPORARY WALKWAYS, AND PROVISIONS FOR ENSURING THE PROJECT'S SECURITY AND SAFE PASSAGEWAY AROUND IT BY CAMPUS STAFF, STUDENTS AND VISITORS AT ALL TIMES.
8. CONTRACTOR TO BE RESPONSIBLE FOR OBTAINING ALL NECESSARY & REQUIRED PERMITS FOR THIS WORK.
9. NOTIFICATION PRIOR TO THE START OF THE WORK MUST BE GIVEN TO THE UNDERGROUND SERVICE ALERT (USA).
10. CONTRACTOR SHALL BE RESPONSIBLE FOR ACQUIRING APPROVAL FROM DISTRICT PERSONNEL AND PROJECT ARCHITECT FOR THE LOCATION OF ALL STAGING, STORAGE, CONSTRUCTION OFFICE AND LAY DOWN AREAS.
11. CONSTRUCTION HOURS TO BE VERIFIED AND APPROVED BY DISTRICT AND LOCAL AGENCIES.
12. CONTRACTOR MUST HAVE OWNER'S REPRESENTATIVE OR ENGINEER/ARCHITECT FIELD REVIEW AND APPROVE FORMWORK PRIOR TO PLACING SITE CONCRETE FOR CURBS, RAMPS, STAIRS, WALKS, DRIVEWAYS AND RELATED FLATWORK.
13. IF ARCHEOLOGICAL MATERIALS ARE UNCOVERED DURING GRADING, TRENCHING OR OTHER ON-SITE EXCAVATION, ALL WORK ON THE SITE SHALL BE STOPPED AND THE CITY IMMEDIATELY NOTIFIED. THE COUNTY CORONER & THE NATIVE AMERICAN HERITAGE COMMISSION SHALL ALSO BE NOTIFIED AND PROCEDURES FOLLOWED AS REQUIRED IN APPENDIX "K" OF THE CALIFORNIA ENVIRONMENTAL ACT.
14. CONTRACTOR TO COORDINATE WITH SCHOOL PERSONNEL AND ENSURE HIS/HER WORK DOES NOT IMPACT SCHOOL OPERATION AND TRAFFIC CIRCULATION OF BUSSES, EMERGENCY VEHICLES, STAFF AND STUDENT VEHICLES.

SITE MAINTENANCE:

1. CONTRACTOR SHALL: GATHER ALL CONSTRUCTION DEBRIS ON A REGULAR BASIS AND PLACE IT IN A DUMPSTER OR OTHER CONTAINER WHICH IS EMPTIED OR REMOVED ON A REGULAR BASIS. WHEN APPROPRIATE, USE TARPS ON THE GROUND TO COLLECT FALLEN DEBRIS OR SPLATTERS THAT COULD CONTRIBUTE TO STORM WATER RUNOFF POLLUTION.
2. REMOVE ALL DIRT, GRAVEL, RUBBISH, REFUSE, AND GREEN WASTE FROM STREET PAVEMENT AND STORM DRAINS ADJOINING THE SITE. LIMIT CONSTRUCTION ACCESS ROUTES ONTO THE SITE AND PLACE GRAVEL PADS AT THESE LOCATIONS. DO NOT DRIVE VEHICLES AND EQUIPMENT OFF THE PAVED OR GRAVELED AREAS DURING WET WEATHER.
3. SWEEP OR VACUUM THE STREET PAVEMENT AND SIDEWALKS ADJOINING THE PROJECT SITE AND THE ON-SITE PAVED AREAS ON A DAILY BASIS. SCRAPE CAKED-ON MUD AND DIRT FROM THESE AREAS BEFORE SWEEPING. CORNERS AND HARD TO REACH AREAS SHALL BE SWEPT MANUALLY.
4. IF THE STREETS, SIDEWALKS AND/OR PARKING LOT ARE PRESSURE WASHED, DEBRIS MUST BE TRAPPED AND COLLECTED TO PREVENT ENTRY INTO THE STORM DRAIN SYSTEM. NO CLEANING AGENT MAY BE DISCHARGED INTO THE STORM DRAIN. IF ANY CLEANING AGENT OR DEGREASER IS USED, WASH WATER MUST BE COLLECTED AND DISCHARGED TO THE SANITARY SEWER, SUBJECT TO THE APPROVAL OF THE OWNER'S PROJECT MANAGER, OR OTHERWISE DISPOSED OF THROUGH APPROVED DISPOSAL METHODS.
5. CREATE A CONTAINED AND COVERED AREA ON THE SITE FOR THE STORAGE OF BAGS, CEMENT, PAINTS, OILS, FERTILIZERS, PESTICIDES, OR OTHER MATERIALS USED ON THE SITE THAT HAVE THE POTENTIAL OF BEING DISCHARGED INTO THE STORM DRAIN SYSTEM THROUGH EITHER BEING WIND-BLOWN OR IN THE EVENT OF A MATERIAL SPILL.
6. NEVER CLEAN MACHINERY, EQUIPMENT OR TOOLS INTO A STREET, GUTTER OR STORM DRAIN.
7. ENSURE THAT CEMENT TRUCKS, PAINTERS, OR STUCCO/PLASTER FINISHING CONTRACTORS DO NOT DISCHARGE WASH WATER FROM EQUIPMENT, TOOLS OR RINSE CONTAINERS INTO GUTTERS OR DRAINS.
8. PREVENT DUST FROM LEAVING THE SITE AND ACCUMULATING ON ADJACENT AREAS AS REQUIRED IN THE DUST CONTROL NOTES ON THIS SHEET.
9. PREVENT SEDIMENT LADEN STORM RUN-OFF FROM LEAVING THE SITE OR ENTERING STORM DRAIN OR SANITARY SEWER SYSTEMS AS REQUIRED IN THE EROSION AND SEDIMENTATION CONTROL NOTES ON THIS SHEET.
10. MAINTAIN EXISTING TREES AND PLANTS THAT ARE TO REMAIN AS REQUIRED BY THE TREE AND PLANT PROTECTION NOTES ON THIS SHEET.

DUST CONTROL:

1. WATER TRUCKS SHALL BE PRESENT AND IN USE AT THE CONSTRUCTION SITE. ALL PORTIONS OF THE SITE SUBJECT TO BLOWING DUST SHALL BE WATERED AS OFTEN AS DEEMED NECESSARY BY THE APPROPRIATE GOVERNMENTAL AGENCY IN ORDER TO ENSURE PROPER CONTROL OF BLOWING DUST FOR THE DURATION OF THE PROJECT.
2. WATERING ASSOCIATED WITH ON-SITE CONSTRUCTION ACTIVITY SHALL TAKE PLACE BETWEEN THE ESTABLISHED CONSTRUCTION HOURS AND SHALL INCLUDE AT LEAST ONE LATE-AFTERNOON WATERING TO MINIMIZE THE EFFECTS OF BLOWING DUST.
3. ALL PUBLIC STREETS AND MEDIANS SOILED OR LITTERED DUE TO THIS CONSTRUCTION ACTIVITY SHALL BE CLEANED AND SWEPT ON A DAILY BASIS DURING THE WORK WEEK, OR AS OFTEN AS DEEMED NECESSARY BY THE OWNER'S ENGINEER/INSPECTOR, TO THE SATISFACTION OF THE CITY'S DEPARTMENT OF PUBLIC WORKS.
4. WATERING ON PUBLIC STREETS OR POWER WASHING SEDIMENTATION ON STREETS SHALL NOT OCCUR, UNLESS CONTRACTOR COLLECTS AND FILTERS THE WASH WATER PRIOR TO ITS ENTERING THE CITY'S STORM DRAIN SYSTEM.
5. ON-SITE PAVED ACCESS ROADS, PARKING AREAS, AND STAGING AREAS SHALL BE SWEPT DAILY WITH A WATER SWEEPER.
6. ALL TRUCKS HAULING SOIL, SAND, AND OTHER LOOSE MATERIALS SHALL BE COVERED WITH TARPAULINS OR OTHER EFFECTIVE COVERS.
7. THE SPEED OF ALL VEHICLES DRIVING ON UNPAVED ROADS OR PORTIONS OF THE SITE SHALL BE LIMITED TO 10 MPH.

EROSION AND SEDIMENTATION CONTROL NOTES:

1. EROSION CONTROL MEASURES ARE INTENDED TO PREVENT SEDIMENT AND DEBRIS FROM ENTERING THE CITY, COUNTY STORM DRAIN SYSTEM, SANITARY SEWER SYSTEM OR FROM LEAVING THE SITE. THE CONTRACTOR SHALL MAKE ADJUSTMENTS IN THE FIELD TO MAKE SURE THAT THIS CONCEPT IS CARRIED OUT.
2. EROSION CONTROL FACILITIES AND MEASURES ARE TO BE INSTALLED AND OPERABLE BY OCTOBER 1st AND SHALL CONTINUE IN EFFECT UNTIL DISTURBED AREAS ARE STABILIZED OR UNTIL INSTALLATION OF THE PERMANENT SITE IMPROVEMENTS.
3. CONTRACTOR SHALL ASSUME THE CONCEPTS ON THE EROSION CONTROL PLAN, C5.1, ARE SCHEMATIC MINIMUM REQUIREMENTS, THE FULL EXTENT OF WHICH ARE TO BE DETERMINED BY THE CONTRACTOR. CONTRACTOR IS RESPONSIBLE FOR THE EXACT DESIGN AND EXTENT OF THE EROSION CONTROL SYSTEM SO THAT IT WORKS WITH THE CONTRACTOR'S INTENDED USE AND MANAGEMENT OF THE CONSTRUCTION SITE, AND IS APPROVAL BY THE APPROPRIATE GOVERNMENTAL AGENCIES.
4. ALL EROSION CONTROL FACILITIES SHALL BE INSPECTED BY THE CONTRACTOR AND REPAIRED, AS REQUIRED, AT THE CONCLUSION OF EACH WORKING DAY DURING THE RAINY SEASON. THE CONTRACTOR SHALL INSPECT THE EROSION CONTROL FACILITIES AND MAKE NECESSARY REPAIRS PRIOR TO ANTICIPATED STORMS AND AT REASONABLE INTERVALS DURING STORMS OF EXTENDED DURATION. REPAIRS TO DAMAGED FACILITIES SHALL BE MADE IMMEDIATELY UPON DISCOVERY.
5. AS SOON AS PRACTICAL FOLLOWING EACH STORM, THE CONTRACTOR SHALL REMOVE ANY ACCUMULATION OF SILT OR DEBRIS FROM THE EROSION CONTROL SEDIMENT BASINS AND SHALL CLEAR THE OUTLET PIPES OF ANY BLOCKAGE.
6. PROVISION SHALL BE MADE TO ASSURE THAT BORROW AREAS AND STOCK PILED SOILS ARE PROTECTED FROM EROSION WITH EROSION CONTROL MEASURES SATISFACTORY TO THE APPROPRIATE GOVERNMENTAL AGENCIES.
7. ALL STOCKPILE MATERIALS SHALL BE COVERED AND PROTECTED FROM THE ELEMENTS WITH A NON-PERMEABLE PLASTIC MEMBRANE SO AS TO PREVENT SOIL EROSION FROM OCCURRING. THIS COVER SHALL BE SECURED WITH ANCHORS OR WEIGHTS OF SUFFICIENT SIZE AND FREQUENCY TO PREVENT DISRUPTION OR REMOVAL BY WIND OR RAIN. ANCHORAGE AT THE BASE OF THE SLOPE SHALL BE AS INDICATED BY DETAIL ON THIS SHEET. ALL MEMBRANE AND COVERINGS SHALL BE INSPECTED AND MAINTAINED BY THE CONTRACTOR OR HIS REPRESENTATIVE ON A FREQUENT AND REGULAR BASIS. SPECIFICALLY BEFORE AND AFTER ANY INCLEMENT WEATHER, WITH ANY NECESSARY REPAIRS BEING IMMEDIATELY PERFORMED. COVERINGS SHALL REMAIN IN PLACE UNTIL THE STOCKPILE(S) IS READY TO BE REMOVED FROM THE SITE, AT WHICH TIME THEY MAY BE REMOVED AND DISPOSED OF BY THE CONTRACTOR.
8. EARTHEN BERMS, STRAW-FIBER FILLED TUBES AND/OR GEOTEXTILE FABRIC BARRIER (SILT FENCING) SHALL BE CONSTRUCTED AS SHOWN TO PREVENT OFF-FLOW OF SEDIMENT-LADEN RUNOFF, OR THE EROSION OF BANKS OR ROADWAYS. ALL SUCH TEMPORARY EROSION CONTROL MEASURES SHALL BE REMOVED BY THE CONTRACTOR AS SOON AS CONSTRUCTION IS COMPLETED AND VEGETATION IS ESTABLISHED. HAY BALES SHALL NOT BE USED.
9. ALL PAVED AREAS SHALL BE KEPT CLEAR OF EARTH MATERIAL AND DEBRIS, SWEPT ON A REGULAR BASIS, TO THE SATISFACTION OF THE ON-SITE INSPECTORS.
10. SWEEP OR VACUUM THE STREET PAVEMENT AND SIDEWALKS ADJOINING THE PROJECT SITE AND THE ON-SITE PAVED AREAS ON A DAILY BASIS OR AS REQUIRED BY THE CITY. SCRAPE CAKED-ON MUD AND DIRT FROM THESE AREAS BEFORE SWEEPING. CORNERS AND HARD TO REACH AREAS SHALL BE SWEPT MANUALLY.
11. PERSON RESPONSIBLE FOR EROSION CONTROL IMPLEMENTATION, TO BE DETERMINED.
12. WHEEL WASHERS SHALL BE INSTALLED AND USED TO CLEAN ALL TRUCKS AND EQUIPMENT LEAVING THE CONSTRUCTION SITE. IF WHEEL WASHERS CANNOT BE INSTALLED, TIRES OR TRACKS OF ALL TRUCKS AND EQUIPMENT SHALL BE WASHED OFF BEFORE LEAVING THE CONSTRUCTION SITE.

TREE/PLANT PROTECTION NOTES:

1. PRIOR TO BEGINNING CONSTRUCTION ON SITE, CONTRACTOR SHALL IDENTIFY, CONFIRM WITH OWNER AND PROTECT EXISTING TREES AND PLANTS DESIGNATED AS TO REMAIN.
2. PROVIDE 6 FOOT TALL TREE PROTECTION FENCE WITH DISTINCTIVE MARKING VISIBLE TO CONSTRUCION EQUIPMENT, ENCLOSING DRIP LINES OF TREES DESIGNATED TO REMAIN.
3. WORK REQUIRED WITHIN FENCE LINE SHALL BE HELD TO A MINIMUM, AVOID UNNECESSARY MOVEMENT OF HEAVY EQUIPMENT WITHIN FENCED AREA AND DO NOT PARK ANY VEHICLES UNDER DRIP LINE OF TREES. DO NOT STORE EQUIPMENT OR MATERIALS WITHIN FENCE LINE.
4. PRIOR TO REMOVING ROOTS AND BRANCHES LARGER THAN 2" IN DIAMETER OF TREES OR PLANTS THAT ARE TO REMAIN, CONSULT WITH THE OWNER'S PROJECT MANAGER.
5. ANY GRADE CHANGES GREATER THAN 6" WITHIN THE DRIPLINE OF EXISTING TREES SHALL NOT BE MADE WITHOUT FIRST CONSULTING THE LANDSCAPE ARCHITECT / CIVIL ENGINEER.
6. PROTECT EXISTING TREES TO REMAIN FROM SPILLED CHEMICALS, FUEL OIL, MOTOR OIL, GASOLINE AND ALL OTHER CHEMICALLY INJURIOUS MATERIAL; AS WELL AS FROM PUDDLING OR CONTINUOUSLY RUNNING WATER. SHOULD A SPILL OCCUR, STOP WORK IN THAT AREA AND CONTACT THE CITY'S ENGINEER / INSPECTOR IMMEDIATELY. CONTRACTOR SHALL BE RESPONSIBLE TO MITIGATE DAMAGE FROM SPILLED MATERIAL AS WELL AS MATERIAL CLEAN UP.
7. PROVIDE TEMPORARY IRRIGATION TO ALL TREES AND PLANTS THAT ARE IN OR ADJACENT TO CONSTRUCTION AREAS WHERE EXISTING IRRIGATION SYSTEMS MAY BE AFFECTED BY THE CONSTRUCTION. ALSO PROVIDE TEMPORARY IRRIGATION TO RELOCATED TREES.
8. CONTRACTOR SHALL BE RESPONSIBLE FOR ONGOING MAINTENANCE OF ALL TREES DESIGNATED TO REMAIN AND FOR MAINTENANCE OF RELOCATED TREES STOCKPILED DURING CONSTRUCTION. CONTRACTOR WILL BE REQUIRED TO REPLACE TREES THAT DIE DUE TO LACK OF MAINTENANCE.
9. CONSULT WITH LANDSCAPE ARCHITECT SHOULD SPECIAL CIRCUMSTANCES ARISE OR QUESTIONS ARISE REGARDING THESE PROCEDURES.

DEMOLITION NOTES :

1. DEMOLITION AND CONSTRUCTION WORK MAY BE PERFORMED OVER THE TOP OF AND AROUND TELEPHONE AND POWER SERVICES. CONTRACTOR SHALL WORK BY HAND IN ALL AREAS WHERE THESE SERVICES MIGHT BE HARMED BY LARGER LESS PRECISE EQUIPMENT.
2. THE CONTRACTOR SHALL LOCATE AND CLEARLY MARK (AND THEN PRESERVE THESE MARKERS) FOR THE DURATION OF CONSTRUCTION OF ALL TELEPHONE, DATA, STREET LIGHT, SIGNAL LIGHT AND POWER FACILITIES THAT ARE IN OR NEAR THE AREA OF CONSTRUCTION.
3. CONTRACTOR'S BID IS TO INCLUDE ALL VISIBLE SURFACE AND ALL SUBSURFACE FEATURES IDENTIFIED TO BE REMOVED OR ABANDONED IN THESE DOCUMENTS.
4. THE CONTRACTOR SHALL BE RESPONSIBLE FOR A SITE INSPECTION TO FULLY ACKNOWLEDGE THE EXTENT OF THE DEMOLITION WORK.
5. THE CONTRACTOR SHALL BE RESPONSIBLE FOR OBTAINING ANY AND ALL PERMITS NECESSARY FOR ENCROACHMENT, GRADING, DEMOLITION, AND DISPOSAL OF SAID MATERIALS AS REQUIRED BY PRIVATE, LOCAL AND STATE JURISDICTIONS. THE CONTRACTOR SHALL PAY ALL FEES ASSOCIATED WITH THE DEMOLITION WORK.
6. CONTRACTOR SHALL PAY DISPOSAL FEES.
7. BACKFILL ALL DEPRESSIONS AND TRENCHES FROM DEMOLITION OF FOUNDATIONS & UTILITIES TO THE SATISFACTION OF THE GEOTECHNICAL ENGINEER.
8. WITHIN LIMITS OF WORK, REMOVE CURBS, GUTTERS, LANDSCAPING, SIGNAGE, TREES, SHRUBS, ASPHALT, UNDERGROUND PIPES, ETC. AS INDICATED ON THE DRAWINGS.
9. REMOVAL OF LANDSCAPING SHALL INCLUDE ROOTS AND ORGANIC MATERIALS TO THE SATISFACTION OF THE GEOTECHNICAL ENGINEER.
10. PRIOR TO BEGINNING DEMOLITION WORK ACTIVITIES, CONTRACTOR SHALL INSTALL EROSION CONTROL MEASURES OUTLINED IN THE EROSION CONTROL PLAN & DETAILS.
11. CONTRACTOR SHALL BE RESPONSIBLE FOR DISPOSING ALL DEMOLITION MATERIALS, OR STORING SELECTED ITEMS BY OWNER'S REPRESENTATIVE AT DESIGNATED LOCATIONS.
12. ABANDONED UTILITIES WITHIN 6 FEET OF THE PROPOSED BUILDING FOOTPRINT SHOULD BE REMOVED IN THEIR ENTIRETY. UTILITIES OUTSIDE THE BUILDING AREA SHOULD BE REMOVED OR ABANDONED IN-PLACE BY LOCATING AND PLUGGING ALL LATERALS AND ENDS OF PIPES WITH CONCRETE, AND THEN FILLING THE ENTIRE PIPE WITH GROUT. REMOVAL OF ANY UTILITIES WILL REQUIRE THAT ALL TRENCHES BE BACKFILLED PER THE SPECIFICATIONS WITH APPROPRIATE TESTS BY THE GEOTECHNICAL ENGINEER TO VERIFY COMPACTION VALUES.

SITE FENCING NOTES :

1. CONTRACTOR SHALL PROVIDE A CONSTRUCTION FENCE AROUND THE ENTIRE AREA OF DEMOLITION AND CONSTRUCTION, INCLUDING ALL STAGING, STORAGE, CONSTRUCTION OFFICE AND LAYDOWN AREAS.
2. FENCE LOCATION MAY BE ADJUSTED FROM TIME TO TIME AS CONSTRUCTION PROCEEDS TO EXCLUDE SOME AREAS WHERE CONSTRUCTION WORK IS NOT BEING DONE AND THE AREA IS NOT OBJECTIONABLE IN VISUAL APPEARANCE, AT THE DISCRETION AND APPROVAL OF THE DISTRICT STAFF. CONSTRUCTION FENCE SHALL BE A MINIMUM OF A 6' HIGH GALVANIZED CHAIN LINK.
3. CONSTRUCTION FENCE ADDRESSED IN THESE NOTES IS TO MEET MINIMUM SEPARATION REQUIREMENTS FROM CONSTRUCTION SITE AND THE CAMPUS. CONTRACTOR IS REQUIRED TO INSTALL ANY ADDITIONAL FENCING, BARRICADES OR OTHER SAFETY DEVICES NEEDED TO KEEP THE SITE SECURE & SAFE AT ALL TIMES.
4. ALL FENCING SHALL BE INSTALLED AT ONLY LOCATIONS DESIGNATED AND APPROVED BY DISTRICT PERSONNEL, WITH PARTICULAR CARE GIVEN SUCH THAT THE FENCING DOES NOT CREATE A TRAFFIC HAZARD OR NUISANCE, OR RESTRICT CAMPUS CIRCULATION & FIRE EXITING.

GRADING & EARTHWORK NOTES:

1. ALL PAVED AREAS ARE TO SLOPE A MINIMUM OF 1%. ACCESSIBLE STALLS AND LOADING ZONES ARE TO SLOPE AT A MAXIMUM OF 2% IN ANY DIRECTION AND ACCESSIBLE PATHWAYS ARE TO SLOPE AT A MAXIMUM OF 8.33%, WITH A MAXIMUM CROSS-SLOPE OF 2%. ANY AREAS ON THE SITE NOT CONFORMING TO THESE BASIC RULES DUE TO EXISTING CONDITIONS OR DISCREPANCIES IN THE DOCUMENTS ARE TO BE REPORTED TO THE ARCHITECT/ENGINEER PRIOR TO PROCEEDING WITH FORMWORK FOR CURBS AND/OR FLATWORK.
2. CONTRACTOR SHALL DETERMINE EARTHWORK QUANTITIES BASED ON THE TOPOGRAPHIC SURVEY, THE SOILS INVESTIGATION AND THE PROPOSED SURFACE GRADES AND BASE THE BID ACCORDINGLY. ANY DIFFERENCES BETWEEN THE STATE IN WHICH THE PROJECT SITE IS DELIVERED TO THE CONTRACTOR AND THESE DOCUMENTS SHOULD BE NOTED TO THE CIVIL ENGINEER.
3. ALL FILL SHALL BE COMPACTED PER THE CONSTRUCTION SPECIFICATIONS AND THE CONTRACTOR SHALL COORDINATE AND COMPLY WITH THE OWNER'S TESTING AGENCY TO TAKE THE APPROPRIATE TESTS TO VERIFY COMPACTION VALUES.
4. IMPORT SOILS MUST MEET THE REQUIREMENTS OF THE CONSTRUCTION SPECIFICATIONS.
5. COORDINATE THE PLACEMENT OF ALL SLEEVES FOR LANDSCAPE IRRIGATION (WATER AND CONTROL WIRING) AND STREET LIGHTING PRIOR TO THE PLACEMENT OF ANY ASPHALT, BASEROCK OR CONCRETE SURFACING. SEE LANDSCAPE AND SITE ELECTRICAL DRAWINGS.
6. DO NOT ADJUST GRADES ON THIS PLAN WITHOUT PRIOR WRITTEN APPROVAL OF ARCHITECT & ENGINEER.
7. SPOT ELEVATIONS ARE TO FINISHED SURFACE.
8. TOP OF CONCRETE CURBS ARE 0.50' ABOVE TOP OF PAVING ELEVATIONS, U.N.O.
9. ROUGH GRADING TO BE WITHIN 0.1' AND FINISH GRADES ARE TO BE WITHIN 0.05'.
10. SUBGRADES SHALL BE PROOF ROLLED, OR AS INSTRUCTED PER THE CONSTRUCTION SPECIFICATIONS.
11. CONTRACTOR TO GRADE LANDSCAPED (NON PAVED) AREAS TO A FINISH GRADE OF 8" BELOW PROPOSED FINISH GRADE SHOWN ON THE GRADING PLANS. DISTRICT WILL INSTALL TOP 8 INCHES OF TOPSOIL AND PERFORM FINISH GRADING. CONTRACTOR TO GRADE PLANTER & LANDSCAPED AREAS (NON-PAVED AREAS ADJACENT TO BUILDINGS) TO FINISH GRADE 24" BELOW FINISH FLOOR OF BUILDING. DISTRICT TO INSTALL FINAL FILL MATERIAL, AND INSTALL IRRIGATION SYSTEMS.
12. AFTER STAKING FOR HORIZONTAL CONTROL CONTRACTOR SHALL FIELD CHECK ALL ELEVATIONS MARKED WITH (E) AND REPORT ANY DISCREPANCIES GREATER THAN 0.05' TO ARCH/ENGR.
13. ALL EXISTING UTILITY STRUCTURES WITHIN THE AREA OF WORK SHALL HAVE THE LIDS, GRATES, COVERS, ETC. ADJUSTED TO BE FLUSH WITH FINISHED GRADES. CONTRACTOR SHALL IDENTIFY ALL SUCH ITEMS BY USE OF THESE PLANS AND THOROUGH FIELD INVESTIGATION.
14. GEOTECHNICAL CONSULTANT TO BE NOTIFIED OF DELIVERY OF ALL IMPORTED SOILS TO SITE FOR HIS/HER INSPECTION AND APPROVAL PRIOR TO PLACING BY CONTRACTOR.

EARTHWORK QUANTITY NOTES:

1. THE CONTRACTOR IS RESPONSIBLE FOR DETERMINING THE QUANTITIES OF ALL FORMS OF EARTHWORK ON THIS PROJECT AND BASING THE BID ON THOSE QUANTITIES WITH FULL KNOWLEDGE THAT ADDITIONAL PROCESSES - INCLUDING ENGINEERING - AND QUANTITIES ARE ALSO TO BE INCLUDED IN THE BID PER THE FOLLOWING NOTES.
2. THE CONTRACTOR SHALL MAKE AN INITIAL DETERMINATION OF THE QUANTITIES, BASED ON A DETAILED SITE VISIT, THE TOPOGRAPHIC SURVEY, THE GEOTECHNICAL REPORT, THE FINISH GRADES SHOWN ON THESE DRAWINGS, THE SIZE AND EXTENT OF FOOTINGS, THE PREPARATION AND MATERIALS USED FOR BUILDING SLABS, PAVEMENT SECTIONS, AND THE SIZE AND DEPTH OF UTILITY TRENCHES, INCLUDING THE UTILITY CONTRACTORS ANTICIPATED RE-USE OF EXISTING MATERIAL FOR BACKFILL IF ANY.
3. THE CONTRACTOR SHALL MEET THE GRADES SHOWN ON THE DRAWINGS, ADJUSTING THE AMOUNT OF IMPORT OR EXPORT AS REQUIRED TO DO SO. NO ASSUMPTIONS SHOULD BE MADE ABOUT THE SITE BALANCING. NO ADJUSTMENTS TO THE GRADES SHALL BE PERMITTED UNLESS SPECIFICALLY APPROVED BY THE ARCH/ENGR IN WRITING AFTER THE IMPACT OF ANY GRADE CHANGES (IMPACT TO RAMPS, STAIRS, WORK BY OTHERS, ETC.) HAS BEEN THOROUGHLY REVIEWED BY THE ARCH/ENGR. WHEN PREPARING THE EARTHWORK BIDS, DO NOT ASSUME ANY CHANGES TO THE FINISHED GRADES SHOWN ON THESE DRAWINGS WILL BE PERMITTED.
4. THE EARTHWORK SPECIFICATIONS AND GEOTECHNICAL REPORT HAVE SPECIFIC REQUIREMENTS FOR BRINGING FILL MATERIAL ONTO THE SITE (IMPORT) SINCE THE EXISTING SOILS ARE NOT SUITABLE FOR FILL MATERIAL IN CERTAIN AREAS. THE EARTHWORK SPECIFICATIONS AND GEOTECHNICAL REPORT MAY IDENTIFY ALTERNATIVES THAT ALLOW TREATMENT OF EXISTING SOILS TO MINIMIZE IMPORT, HOWEVER MEETING THE GRADES SHOWN ON THESE DRAWINGS MUST ALSO BE CONSIDERED WHEN DETERMINING THE METHOD.
5. AFTER THE BID IS AWARDED THE CONTRACTOR SHALL SUBMIT A DETAILED EARTHWORK HANDLING PLAN THAT SHOWS THE INTENT AND LOCATIONS OF EARTH MOVEMENT AND QUANTITIES OF CUT, FILL, IMPORT AND EXPORT AS THE PROJECT WAS BID. PROPOSING ALTERNATIVE PLANS THAT MAY IDENTIFY GRADE ADJUSTMENTS TO MINIMIZE THE DISTANCE SOIL IS MOVED OR TO MINIMIZE IMPORT OR EXPORT WILL NOT RELIEVE THE CONTRACTOR OF THE RESPONSIBILITY OF PREPARING AN EARTHWORK PLAN AS BID.

GENERAL UTILITY SYSTEM NOTES :

1. ALL TRENCHES SHALL BE BACKFILLED PER THE SPECIFICATIONS WITH APPROPRIATE TESTS TO VERIFY COMPACTION VALUES.
2. CONTRACTOR SHALL STAKE LOCATION OF ABOVE GROUND UTILITY EQUIPMENT (HYDRANTS, TRANSFORMERS, ETC.) AND MEET WITH THE APPROPRIATE GOVERNMENTAL AUTHORITY AND PROPER UTILITY AUTHORITY TO REVIEW LOCATION PRIOR TO INSTALLATION. THE APPROPRIATE GOVERNMENTAL AUTHORITY AND PROPER UTILITY AUTHORITY MUST SPECIFICALLY AGREE WITH LOCATION PRIOR TO PROCEEDING WITH THE INSTALLATION.
3. CONTRACTOR SHALL VERIFY (POTHOLE IF NECESSARY) SIZE, MATERIAL, LOCATION AND DEPTH OF ALL SYSTEMS THAT ARE TO BE CONNECTED TO OR CROSSED PRIOR TO THE TRENCHING OR INSTALLATION OF PROPOSED UTILITIES, AND INFORM ENGINEER OF ANY CONFLICTS BEFORE PROCEEDING WITH WORK.
4. CATHODIC PROTECTION IS REQUIRED ON ALL METALLIC FITTINGS AND ASSEMBLIES THAT ARE IN CONTACT WITH THE SOIL. CONTRACTOR IS RESPONSIBLE FOR FULLY ENGINEERING AND INSTALLING THIS SYSTEM AND COORDINATE ANODE AND TEST STATION LOCATIONS WITH OWNER'S ENGINEER. SEE PROJECT SPECIFICATIONS FOR ADDITIONAL CORROSION PROTECTION REQUIREMENTS.
5. CONTRACTOR SHALL VERIFY ALL EXISTING UTILITIES, INVERTS AND LOCATIONS PRIOR TO BEGINNING ANY WORK ON THIS SITE.
6. ALL DRAINAGE STRUCTURES LOCATED IN VEHICULAR TRAFFIC AREAS SHALL HAVE TRAFFIC RATED COVERS AND BOLT-DOWN GRATES. ALL DRAINAGE STRUCTURES IN PEDESTRIAN ACCESSIBLE AREAS SHALL HAVE ADA APPROVED BOLT-DOWN GRATES.
7. ALL UTILITY STRUCTURES WITHIN THE AREA OF WORK SHALL HAVE THE LIDS, GRATES, COVERS, ETC. ADJUSTED TO BE FLUSH WITH FINISHED GRADES. CONTRACTOR SHALL IDENTIFY ALL SUCH ITEMS BY USE OF THESE PLANS AND FIELD INVESTIGATION.
8. SEE LANDSCAPE LAYOUT PLANS FOR IRRIGATION SLEEVE LOCATIONS.
9. ALL EXISTING UTILITY STRUCTURES (CLEANOUTS, VALVES, BOXES, MANHOLES, CB'S, ETC.) SHALL BE RAISED TO FINAL FINISH GRADE AND COMPLETED WITH THE NECESSARY LABOR AND MATERIALS TO BE IN ACCORDANCE WITH DETAILS SHOWN ON THESE PLANS.
10. CLEANOUTS, CATCH BASINS, MANHOLES AND AREA DRAINS ARE TO BE ACCURATELY LOCATED BY THEIR RELATIONSHIP TO THE BUILDING, FLATWORK, BUILDING UTILITIES, AND/OR CURB LAYOUT. NOT BY THE LENGTH OF PIPE SPECIFIED ON THE DRAWINGS. (WHICH IS APPROXIMATE)

GENERAL UTILITY SYSTEM NOTES (Cont.) :

11. SEE ELECTRICAL PLANS FOR SITE ELECTRICAL WORK. ADVISE ENGINEER OF ANY CONFLICTS WITH OTHER UTILITIES PRIOR TO BEGINNING WORK.
12. COMPLETE SYSTEMS: ALL UTILITY SYSTEMS ARE DELINEATED IN A SCHEMATIC MANNER ON THESE PLANS. CONTRACTOR IS TO PROVIDE ALL FITTINGS, ACCESSORIES & WORK NECESSARY TO COMPLETE THE UTILITY SYSTEM SO THAT IT IS FULLY FUNCTIONING FOR THE PURPOSE INTENDED.
13. SEE SPECIFICATION SECTION 01300 FOR SUBMITTAL REQUIREMENTS OF UTILITY COMPONENTS.

SANITARY SEWER NOTES:

1. INSTALL DETECTABLE METALIZED WARNING TAPE APPROXIMATELY 18" BELOW THE SURFACE IN NON-PAVED AREAS, AND AT BOTTOM OF BASEROCK FOR PAVED AREAS. GREEN, IMPRINTED WITH "CAUTION-SANITARY SEWER LINE BELOW", CALPICO TYPE 2 OR EQUAL.
2. PUBLIC AND PRIVATE SANITARY SEWER MAIN AND SERVICE LINE 4-INCH THROUGH 8-INCH SHALL BE POLYVINYL CHLORIDE (PVC) SDR 26 SEWER PIPE.
3. WHERE CONNECTION IS TO BE MADE TO AN EXISTING SEWER OR STRUCTURE, SAID EXISTING SEWER OR STRUCTURE SHALL BE UNCOVERED AND CHECKED FOR LOCATION AND ELEVATION PRIOR TO STAKING NEW SEWER DEPTH AND LOCATION. ANY DISCREPANCY BETWEEN THE PLANS AND FIELD INFORMATION SHALL BE REPORTED IMMEDIATELY TO THE ENGINEER.
4. ALL SANITARY SEWER DESIGNED AT 1% OR FLATTER SHALL BE STAKED BY A CIVIL ENGINEER OR LAND SURVEYOR.
5. REFER TO SANITARY SEWER SPECIFICATIONS FOR LABOR AND MATERIAL, TESTING, AND QUALITY CONTROL REQUIREMENTS.
6. MINIMUM SLOPE FOR SITE SANITARY SEWER PIPES SHALL BE PER CURRENT UPC REQUIREMENTS:

   4" @ 2%
   6" @ 1%
   8" & LARGER @ 0.5%

STORM DRAIN NOTES:

1. INSTALL DETECTABLE METALIZED WARNING TAPE APPROXIMATELY 18" BELOW THE SURFACE IN NON-PAVED AREAS, AND AT BOTTOM OF BASEROCK FOR PAVED AREAS. GREEN, IMPRINTED WITH "CAUTION-STORM DRAIN LINE BELOW", CALPICO TYPE 2 OR EQUAL.
2. PAINT THE TOP OF THE CURBS ADJACENT TO EACH CATCH BASIN INSTALLED UNDER THIS WORK OR ADJACENT TO THIS SITE WITH THE WORDS "NO DUMPING - DRAINS TO BAY". WORDING TO BE BLUE 4" HIGH LETTERS ON A PAINTED WHITE BACKGROUND.
3. INSTALL ADA APPROVED GRATES ON ALL DRAINAGE STRUCTURES WITHIN PEDESTRIAN ACCESSIBLE PAVED AREAS. INSTALL BOLT-DOWN GRATES ON ALL DRAINAGE STRUCTURES.
4. WHERE CONNECTION IS TO BE MADE TO AN EXISTING SEWER OR STRUCTURE, SAID EXISTING SEWER OR STRUCTURE SHALL BE UNCOVERED AND CHECKED FOR LOCATION AND ELEVATION PRIOR TO STAKING NEW SEWER DEPTH AND LOCATION. ANY DISCREPANCY BETWEEN THE PLANS AND FIELD INFORMATION SHALL BE REPORTED IMMEDIATELY TO THE ENGINEER.
5. REFER TO STORM SEWER SPECIFICATIONS FOR LABOR AND MATERIAL, TESTING AND QUALITY CONTROL REQUIREMENTS.
6. MINIMUM SLOPE FOR SITE STORM DRAIN PIPES SHALL BE:

   4" @ 2%
   6" @ 1%
   8" & LARGER @ 0.5%
   UNLESS INDICATED OTHERWISE

7. PRIVATE STORM DRAIN LINE 4-INCH THROUGH 12-INCH WITH A MINIMUM OF TWO (2) FEET OF COVER IN NON-TRAFFIC AREAS SHALL BE POLYVINYL CHLORIDE (PVC) SDR 35.
8. PRIVATE STORM DRAIN LINE 6-INCH THROUGH 12-INCH WITH LESS THAN THREE (3) FEET OF COVER IN VEHICULAR TRAFFIC AREAS SHALL BE POLYVINYL CHLORIDE (PVC) C900, RATED 150 PSI CLASS PIPE.

WATER SYSTEM NOTES:

1. INSTALL DETECTABLE METALIZED WARNING TAPE APPROXIMATELY 18" BELOW THE SURFACE IN NON-PAVED AREAS, AND AT BOTTOM OF BASEROCK FOR PAVED AREAS. BLUE, IMPRINTED WITH "CAUTION-WATER-LINE BELOW", CALPICO TYPE 2 OR EQUAL.
2. PROVIDE THRUST BLOCKS OR COMPARABLE RESTRAINTS PER THE LOCAL WATER AGENCY, AT BENDS OF 22 1/2 DEGREES OR GREATER (HORIZONTAL AND VERTICAL), AT SIZE CHANGES AND AT FIRE HYDRANTS PER CITY STANDARD. AWWA C600, SECTION 3.8 UNLESSS NOTED OTHERWISE.
3. PROVIDE MINIMUM OF 3 FEET OF COVER OVER WATER LINES, UNLESS NOTED OTHERWISE.
4. MAINTAIN PUBLIC WATER LINES 10' AWAY FROM PUBLIC SANITARY SEWER LINES.
5. WHERE WATER LINES HAVE TO CROSS SANITARY SEWER LINES, DO SO AT A 90 DEGREE ANGLE AND WATER LINES SHALL BE MINIMUM OF 12" ABOVE TOP OF SANITARY SEWER LINES AND WATERLINE JOINTS SHALL BE A MINIMUM OF 10 FEET FROM SANITARY SEWERS.
6. WATER LINES ARE SHOWN SCHEMATICALLY. CONTRACTOR SHALL IDENTIFY EACH ANGLE AND/OR BEND WITH APPROPRIATE FITTINGS THAT MAY BE REQUIRED TO ACCOMPLISH THE INTENDED DESIGN.
7. BOTTOM OF BACKFLOW PREVENTOR ASSEMBLY TO BE INSTALLED NO GREATER OR LESS THAN 12" FROM FINISH GRADE.
8. THE UNDERGROUND DOMESTIC WATER SYSTEM INSTALLER SHALL OBTAIN ALL APPROVALS AND PERMITS PRIOR TO ORDERING MATERIALS, FABRICATING SYSTEMS OR ANY INSTALLATION.
9. CONTRACTOR TO POTHOLE AND VERIFY LOCATION, DEPTH & SIZE OF P.O.C. TO EXISTING WATERMAIN PRIOR TO INSTALLING ANY NEW WATERMAIN AND ADVISE THE OWNER ENGINEER OF ANY FIELD DISCREPANCIES THAT WILL IMPACT THE DESIGN.
10. REFER TO DOMESTIC WATER SPECIFICATIONS FOR LABOR AND MATERIAL, TESTING AND QUALITY CONTROL REQUIREMENTS.
11. PUBLIC AND PRIVATE WATER MAIN AND WATER SERVICE LINE 4-INCH THROUGH 12-INCH SHALL BE POLYVINYL CHLORIDE (PVC) AND SHALL MEET AWWA C900, RATED FOR 200 PSI CLASS PIPE WITH EPOXY COATED DUCTILE IRON FITTINGS AND FUSION EPOXY COATED GATE VALVES.
12. ALL WATER LINES 3" OR SMALLER SHALL BE TYPE K COPPER WITH SILVER BRAZED JOINTS. CONTRACTOR TO VERIFY PRESSURES FROM EXISTING LINES ARE ADEQUATE TO SERVICE BUILDINGS AS SPECIFIED BY THE PLUMBING PLANS.

CONDUITS:

1. CONDUITS FOR POWER, SITE LIGHTING, LOW VOLTAGE SYSTEMS, TELEPHONE, SECURITY, DATA, CABLE TV, CLOSED CIRCUIT TV, FIRE ALARM SYSTEMS, ETC SHALL BE INSTALLED PER THE ELECTRICAL SITE PLANS & DETAILS.
2. ALL CONDUITS SHALL INCLUDE PULL STRINGS.
3. ALL CONDUITS STUBBED TO A SPECIFIC LOCATION FOR FUTURE USE OR USE BY A SEPARATE CONTRACTOR SHALL BE CLEARLY MARKED IN THE FIELD AND DOCUMENTED IN THE CONTRACTOR'S RECORD DOCUMENTS AS TO BOTH DEPTH AND LOCATION.

IDENTIFICATION STAMP
DIV. OF THE STATE ARCHITECT
APP: 01-120592 INC:
REVIEWED FOR
SS ☑ FLS ☑ ACS ☑
DATE: 7/11/2023

OWNER: SAN RAFAEL CITY SCHOOLS

PROJECT NAME: VENETIA VALLEY SCHOOL
MIDDLE SCHOOL RESTROOM ADDITION

CLIENT ADDRESS: 177 N SAN PEDRO RD, SAN RAFAEL, CA 94903

SEAL:

REVISIONS:

	DESCRIPTION	DATE
△		
△		
△		
△		
△		
△		
△		
△		
△		
△		
△		

DATE ISSUED:

PROJECT NO:

SCALE: AS SHOWN

SHEET NUMBER: C1.1

SHEET TITLE: NOTES

HOHBACH-LEWIN, INC.
STRUCTURAL & CIVIL ENGINEERS
260 Sheridan Avenue, Suite 150
Palo Alto, CA 94306
(650) 617-5930, Fax (650) 617-5932

HOHBACH-LEWIN #14997.33

Plot Date: Jun 5, 2023 - 10:16 AM

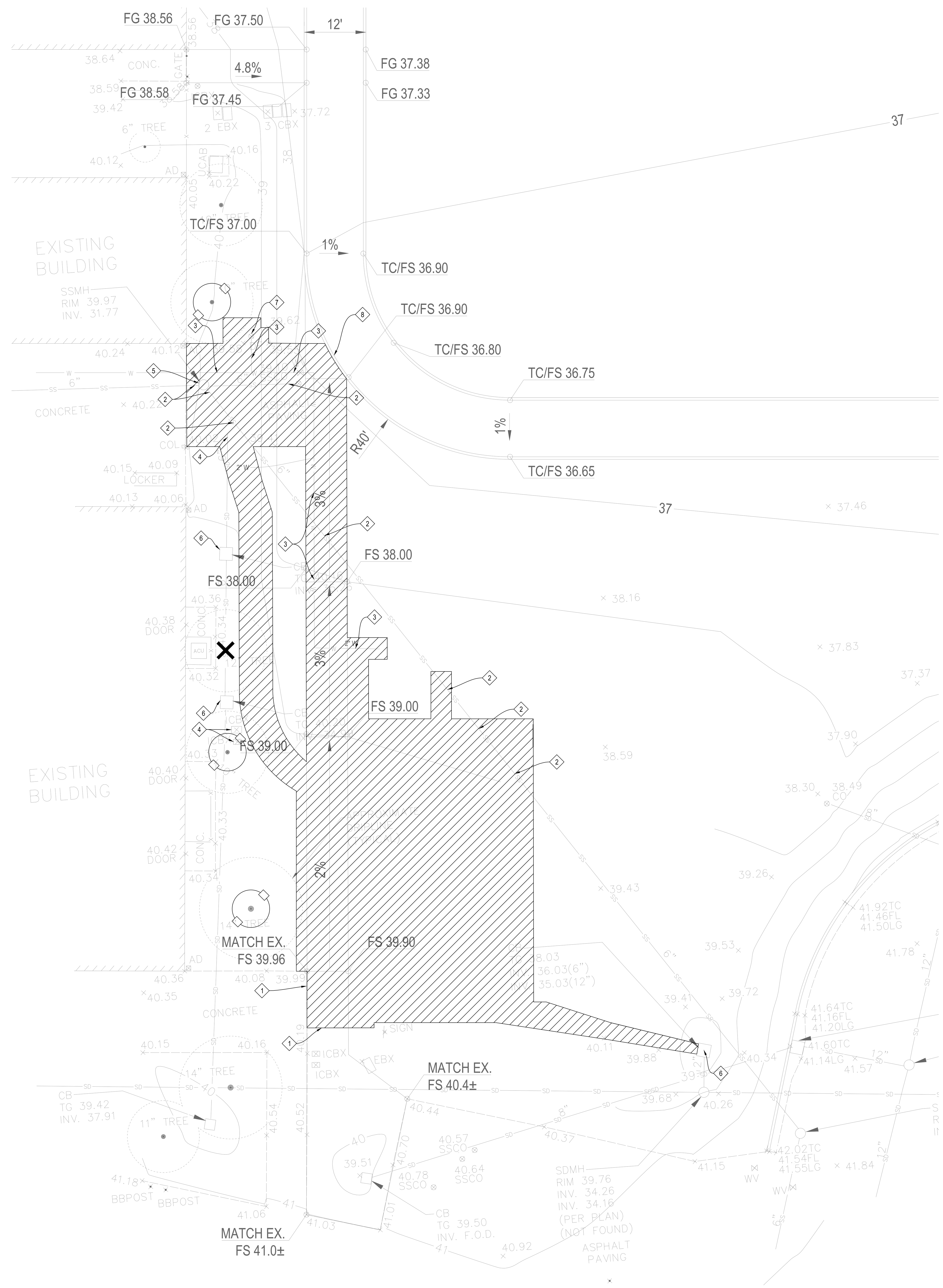

DEMOLITION LEGEND

- ✕ — TREE TO BE REMOVED. SEE LANDSCAPE PLANS.
- (hatched area) — DEMOLITION AREA - ALL SITE FEATURES WITHIN THIS AREA ARE TO BE REMOVED, UNLESS NOTED TO REMAIN.
- (circle) — TREE PROTECTION TREES TO REMAIN

DEMOLITION KEYNOTES

1. EXISTING CONCRETE PATH TO REMAIN PROTECT IN PLACE
2. EXISTING SANITARY SEWER TO REMAIN, PROTECT IN PLACE
3. EXISTING WATER LINE TO REMAIN, PROTECT IN PLACE
4. EXISTING UTILITY BOX TO REMAIN, PROTECT IN PLACE. RIM TO BE ADJUSTED TO NEW GRADES
5. EXISTING SANITARY MANHOLE TO REMAIN, PROTECT IN PLACE. RIM TO BE ADJUSTED TO NEW GRADES
6. EXISTING STORM DRAIN INLET TO REMAIN, PROTECT IN PLACE
7. EXISTING DRINKING FOUNTAIN TO TO BE ROTATED
8. EXISTING CURB TO REMAIN, PROTECT IN PLACE

DEMOLITION NOTES

1. SEE ELECTRICAL PLANS FOR REMOVAL OR RELOCATION OF ALL ELEC/COMM CONDUITS, BOXES, LINE ETC.
2. SEE UTILITY PLAN FOR ALL NEW TIE-IN LOCATIONS AND ANY INSTANCES OF STORM, SANITARY SEWER, OR WATER BEING RELOCATED. ANY EXISTING UTILITIES NOT BEING USED ARE TO BE REMOVED.
3. ALL EXISTING SERVICES AND UTILITIES THAT ARE WITHIN THE LIMITS OF DEMOLITION AND ARE TO REMAIN OPERATIONAL SHALL BE RELOCATED AS NECESSARY.
4. ALL TREES THAT ARE TO REMAIN SHALL BE PROTECTED DURING CONSTRUCTION.
5. CONTRACTOR SHALL VERIFY (POTHOLE IF NECESSARY) SIZE, MATERIAL, LOCATION AND DEPTH OF ALL SYSTEMS THAT ARE TO BE CONNECTED TO OR CROSSED PRIOR TO THE TRENCHING OR INSTALLATION OF PROPOSED UTILITIES, AND INFORM ENGINEER OF ANY CONFLICTS BEFORE PROCEEDING WITH WORK.
6. CONTRACTOR SHALL VERIFY ALL EXISTING UTILITIES, INVERTS AND LOCATIONS PRIOR TO BEGINNING ANY WORK ON THIS SITE.
7. CONTRACTOR TO REMOVE EXISTING RESTROOM WHEN NEW RESTROOM CONSTRUCTION IS COMPLETED, SEE ARCHITECTURAL PLANS FOR LOCATION OF EXISTING RESTROOM.

NORTH

0 5' 10' 15' 20'
SCALE: 1" = 10'

CALL BEFORE YOU DIG USA 800-227-2600

IDENTIFICATION STAMP
DIV. OF THE STATE ARCHITECT
APP: 01-120592 INC:
REVIEWED FOR
SS ☑ FLS ☑ ACS ☑
DATE: 7/11/2023

OWNER: SAN RAFAEL CITY SCHOOLS

PROJECT NAME: VENETIA VALLEY SCHOOL MIDDLE SCHOOL RESTROOM ADDITION

CLIENT ADDRESS: 177 N SAN PEDRO RD, SAN RAFAEL, CA 94903

SEAL:

REGISTERED PROFESSIONAL ENGINEER DANIEL G. LEWIS NO. C38406 CIVIL STATE OF CALIFORNIA

REVISIONS:

	DESCRIPTION	DATE
△		
△		
△		
△		
△		
△		
△		
△		
△		
△		
△		

DATE ISSUED:

PROJECT NO:

SCALE: AS SHOWN

SHEET NUMBER: **C2.0**

SHEET TITLE:

DEMOLITION PLAN

HOHBACH-LEWIN #14997.33

HOHBACH-LEWIN, INC.
STRUCTURAL & CIVIL ENGINEERS
260 Sheridan Avenue, Suite 150
Palo Alto, CA 94306
(650) 617-5930, Fax (650) 617-5932

Plot Date: Jun 5, 2023 - 10:16 AM

NOTES:

1. SLOPE ALL CONCRETE TO DRAIN 1% TO STREET UNLESS SHOWN OTHERWISE.
2. SEE ARCHITECTURAL PLANS FOR CONCRETE COLORS AND FINISHES.
3. EASE ALL EDGES R=1/2".
4. FELT SHALL BE NON-ASPHALTIC IMPREGNATED.
5. CONCRETE SECTION TO BE PER GEOTECHNICAL REPORT.

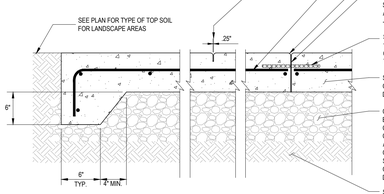

CONTROL JOINT, 1 1/2" DEEP SEE LANDSCAPE OR ARCHITECTUAL PLANS FOR PLACEMENT OF JOINTS.

SEE GRADING AND DRAINAGE PLAN FOR REINFORMENT SPACING AND PLACEMENT

R=1/2" - TYP.

3/8" EXPANSION JOINT: HOLD FELT DOWN 1/2" AND SEAL W/SEALANT, APPROVED BY ARCHITECT -TYP.

SMOOTH SLIP DOWEL 1/2" D 24" LONG @ 18" O.C., GREASE ONE END TYP.

SEE PAVEMENT SECTION ON GRADING AND DRAINAGE PLAN.

CLASS II AGGREGATE BASE ROCK PER CALTRANS STD, TO BE COMPACTED IN ACCORDANCE WITH THE GEOTECHNICAL REPORT. SEE PAVEMENT SECTION ON GRADING AND DRAINAGE PLAN.

SUBGRADE TO BE COMPACTED IN ACCORDANCE WITH GEOTECHNICAL REPORT. SEE PAVEMENT SECTION ON GRADING AND DRAINAGE PLAN.

1 TYPICAL CONCRETE PAVING DETAIL

NOTES:
1. CONCRETE WALK & BASE PER PAVEMENT LEGEND

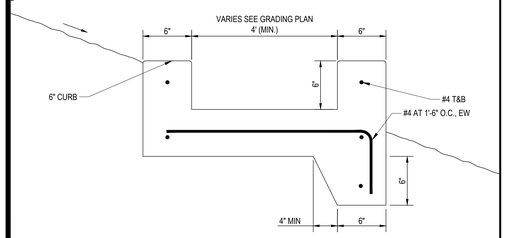

2 SIDEWALK WITH MONOLITHIC CURBS

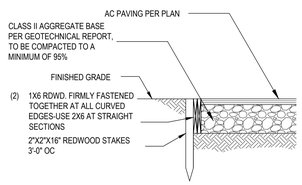

NOTE:
1. HEADER SHALL BE STRAIGHT WITHOUT KINKS OR BENDS
2. PROTECT REDWOOD HEADER AT ALL TIMES. REPLACE DAMAGED HEADER AND ASPHALT. REPAIR AT CONTRACTOR'S EXPENSE.

3 REDWOOD HEADER

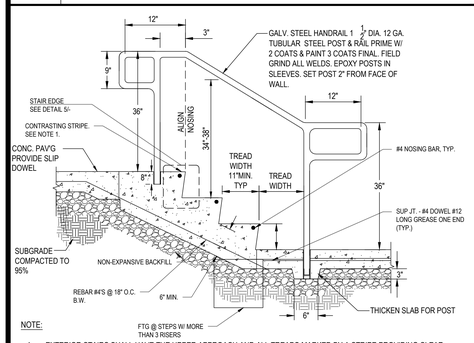

NOTE:
1. EXTERIOR STAIRS SHALL HAVE THE UPPER APPROACH AND ALL TREADS MARKED BY A STRIPE PROVIDING CLEAR VISUAL CONTRAST. THE STRIPE SHALL BE A MINIMUM OF 2 INCHES WIDE TO A MAXIMUM OF 4 INCHES WIDE PLACED PARALLEL TO, AND NOT MORE THAN 1 INCH FROM, THE NOSE OF THE STEP OR UPPER APPROACH. THE STRIPE SHALL EXTEND THE FULL WIDTH OF THE STEP OR UPPER APPROACH AND SHALL BE OF MATERIAL THAT IS AT LEAST AS SLIP RESISTANT AS THE OTHER TREADS OF THE STAIR. A PAINTED STRIPE SHALL BE ACCEPTABLE. GROOVES SHALL NOT BE USED TO SATISFY THIS REQUIREMENT. (CBC SEC.11B-504.4.1)

NOT TO SCALE

4 TYPICAL CONCRETE STAIRS

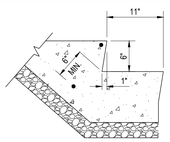

NOTE:

1. THE UPPER APPROACH AND ALL SHALL BE MARKED BY A STRIP OF CLEARLY CONTRASTING COLOR AT LEAST 2" WIDE AND PLACED PARALLEL TO AND NOT MORE THAN 1" FROM THE NOSE OF THE STEP OR LANDING TO ALERT THE VISUALLY IMPAIRED. THE STRIP SHALL BE OF A MATERIAL THAT IS AT LEAST AS SLIP OF RESISTANT AS THE OTHER TREADS OF THE STAIRS. A PAINTED STRIP SHALL BE ACCEPTABLE. GROOVES SHALL NOT BE USED TO SATISFY THIS REQUIREMENT (CDC SEC. 11B-504.4.1)
2. EXTERIOR STAIRS ALL TREADS ARE TO HAVE WARNING STRIPES PER CBC SEC. 11B-504.4.1

5 TYPICAL STAIR EDGE

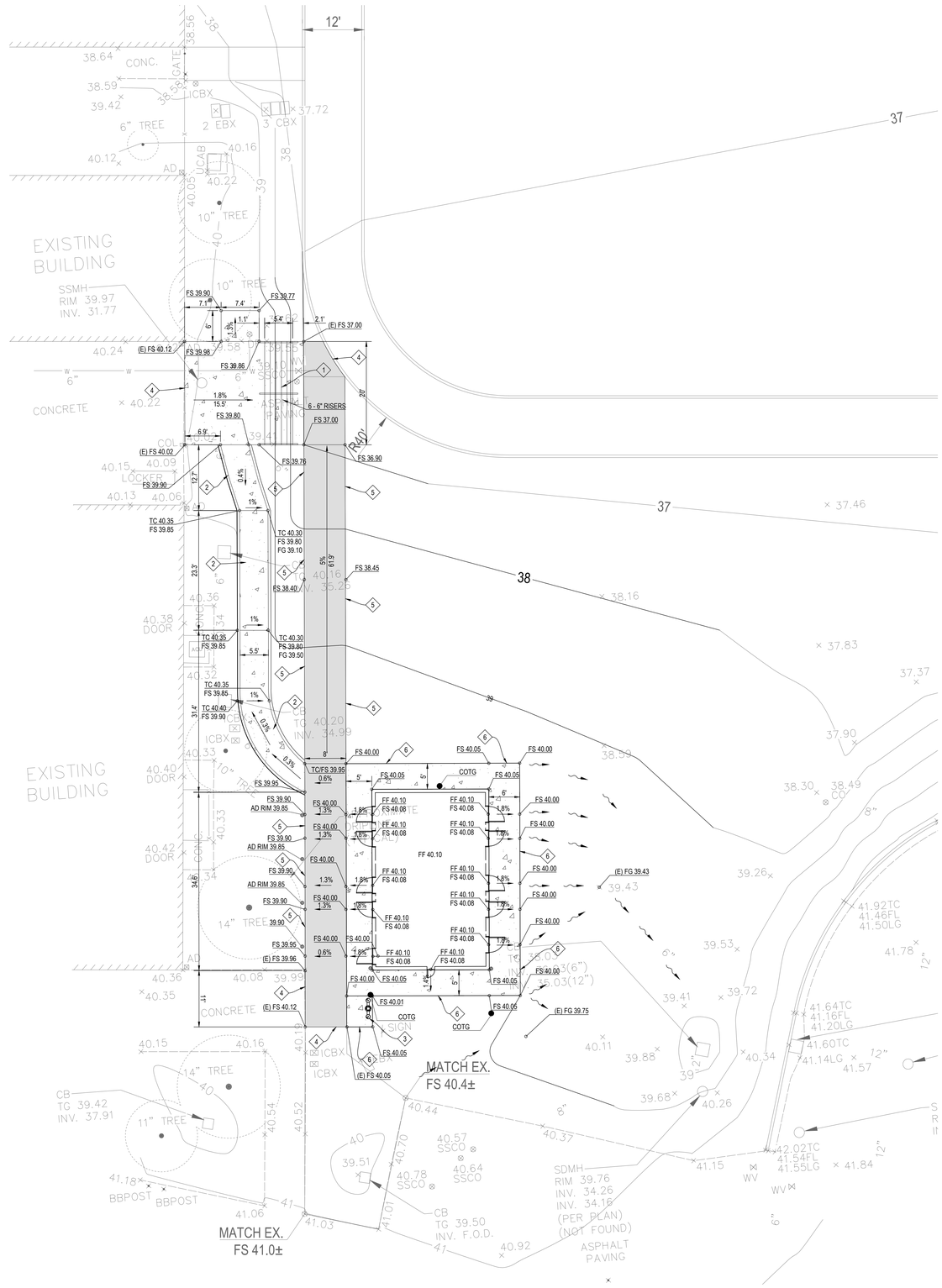

GRADING LEGEND

XX.XX	GRADE ELEVATION
X%	SLOPE AND DIRECTION

GRADING KEYNOTES

1. SITE STAIRS, SEE ARCHITECTURAL PLAN FOR DETAILS AND 4/-
2. SIDEWALK WITH MONOLITHIC CURBS , SEE DETAIL 2/-
3. DRINKING FOUNTAIN, SEE ARCHITECTURAL PLAN FOR DETAILS
4. LIMIT OF WORK
5. INSTALL REDWOOD HEADER, SEE DETAIL 3/-
6. CONCRETE PAVEMENT TO HAVE TURNDOWN EDGE

PAVEMENT LEGEND

PAVEMENT SECTION TO BE APPROVED BY GEOTECHNICAL ENGINEER.

CONCRETE PAVEMENT SURFACES TO HAVE 28-DAY COMPRESSIVE STRENGTH OF AT LEAST 3,200 PSI. CONCRETE PAVING IN VEHICULAR TRAVEL AREA TO MEET ADTT (AVERAGE DAILY TRUCK TRAFFIC) OF 1.

	SIDEWALK CONCRETE	5" CONCRETE W/ #4 @ 12" O.C. E.W. OVER 4" CLASS 2 BASEROCK COMPACTED TO 95% R.C. OVER NATIVE SOILS COMPACTED TO 90% R.C.
	AC PAVEMENT	3.5" AC PAVEMENT OVER 11" CLASS 2 BASEROCK COMPACTED TO 95% R.C. OVER 90% R.C. COMPACTED NATIVE SOILS

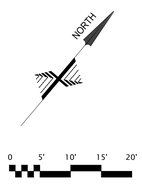

0 5' 10' 15' 20'
SCALE: 1" = 10'

CALL BEFORE YOU DIG 800.227.2600

IDENTIFICATION STAMP
DIV. OF THE STATE ARCHITECT
APP: 01-120592 INC:
REVIEWED FOR
SS ☑ FLS ☑ ACS ☑
DATE: 7/11/2023

OWNER: SAN RAFAEL CITY SCHOOLS

PROJECT NAME: VENETIA VALLEY SCHOOL MIDDLE SCHOOL RESTROOM ADDITION

CLIENT ADDRESS: 177 N SAN PEDRO RD, SAN RAFAEL, CA 94903

SEAL:

REGISTERED PROFESSIONAL ENGINEER DANIEL G. LEWIN NO. C38406 STRUCTURAL

REVISIONS:

	DESCRIPTION	DATE

DATE ISSUED:

PROJECT NO:

SCALE: AS SHOWN

SHEET NUMBER: C3.0

SHEET TITLE: GRADING AND DRAINAGE PLAN

HOHBACH-LEWIN, INC.
STRUCTURAL & CIVIL ENGINEERS
260 Sheridan Avenue, Suite 150
Palo Alto, CA 94306
(650) 617-5930, Fax (650) 617-5932

HOHBACH-LEWIN #14997.33

Plot Date: Jun 5, 2023 - 10:16 AM

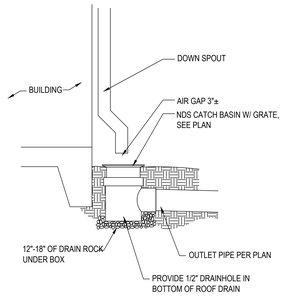

1 DOWNSPOUT TO DRAIN CONNECTION

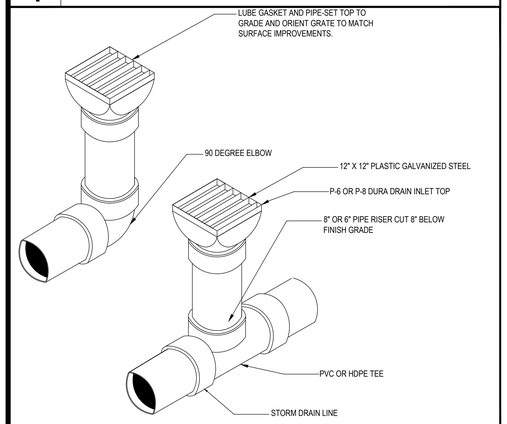

2 AREA DRAIN

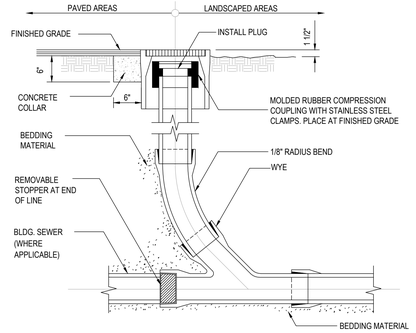

NOTES:

1. FOR PAVED AREAS, INSTALL ROUND, CAST IRON FRAME AND COVER, MARKED "SEWER" OR "STORM" AS APPLICABLE.
2. FOR LANDSCAPED AREAS, INSTALL ROUND, CONCRETE VALVE BOX WITH CAST IRON FACE AND COVER, MARKER "SEWER" OR "STORM" AS APPLICABLE.

1 CLEANOUT TO GRADE

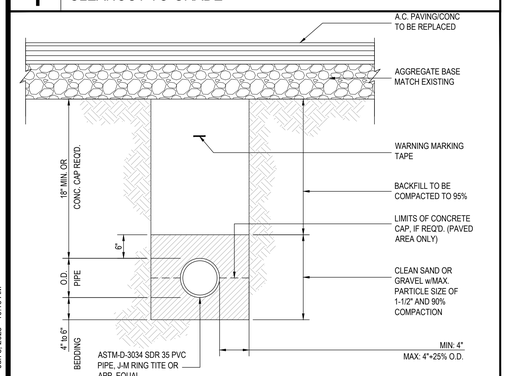

2 UTILITY TRENCH

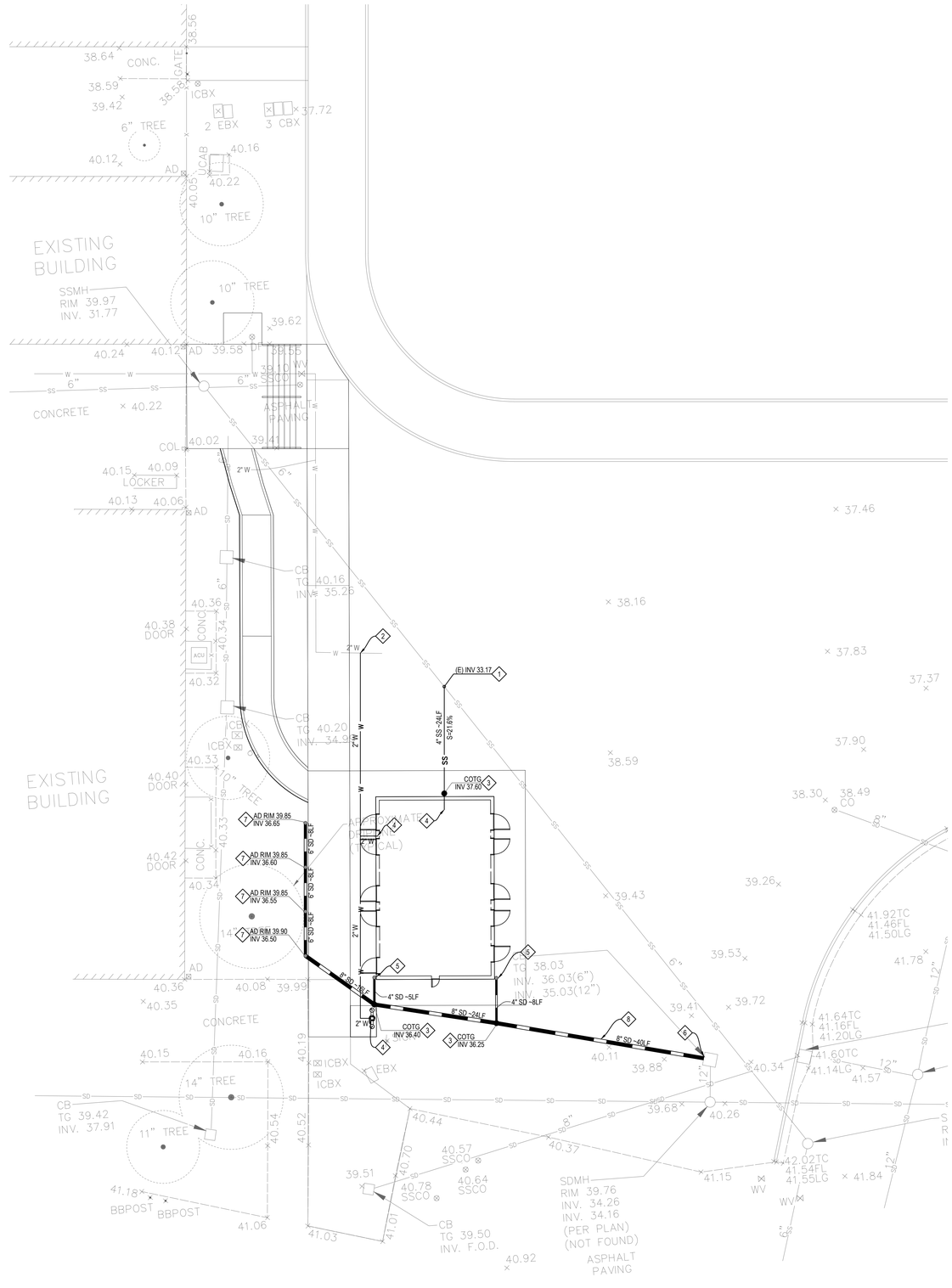

UTILITY LEGEND

- FIRE HYDRANT
- WATER VALVE
- WATER METER
- STORM DRAIN MANHOLE
- BACKFLOW PREVENTER
- CATCH BASIN
- AREA DRAIN
- CLEANOUT TO GRADE
- FIRE DEPARTMENT CONNECTION

UTILITY KEYNOTES

1. CONECT TO EXISTING SANITARY SEWER
2. CONECT TO EXISTING 2" WATER STUB
3. CLEANOUT TO GRADE, SEE DETAIL 3/-
4. SEE PLUMING PLANS FOR CONTINUATION OF UTILITY
5. INSTALL DOWNSPOUT HARD CONNECTION, SEE DETAIL 1/-
6. CONNECT TO EXISTING STORM DRAIN INLET,
7. NEW AREA DRAIN, SEE DETAIL 2/-
8. REPLACE EXISTING 6" STORM DRAIN LINE, CONTRACTOR TO VERIFY INVERTS AND EXTENT OF EXISTING LINE AND REPORT TO ENGINEER

UTILITY NOTES

1. CONTRACTOR SHALL VERIFY (POTHOLE IF NECESSARY) SIZE, MATERIAL, LOCATION AND DEPTH OF ALL SYSTEMS THAT ARE TO BE CONNECTED TO OR CROSSED PRIOR TO THE TRENCHING OR INSTALLATION OF PROPOSED UTILITIES, AND INFORM ENGINEER OF ANY CONFLICTS BEFORE PROCEEDING WITH WORK.
2. CONTRACTOR SHALL VERIFY ALL EXISTING UTILITIES, INVERTS AND LOCATIONS PRIOR TO BEGINNING ANY WORK ON THIS SITE.

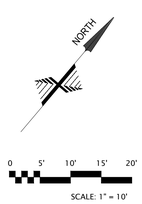

IDENTIFICATION STAMP
DIV. OF THE STATE ARCHITECT
APP: 01-120592 INC:
REVIEWED FOR
SS ☑ FLS ☑ ACS ☑
DATE: 7/11/2023

OWNER: SAN RAFAEL CITY SCHOOLS

PROJECT NAME: VENETIA VALLEY SCHOOL MIDDLE SCHOOL RESTROOM ADDITION

CLIENT ADDRESS: 177 N SAN PEDRO RD, SAN RAFAEL, CA 94903

SEAL:

REGISTERED PROFESSIONAL ENGINEER DANIEL G. LEWIN NO. C38406 CIVIL STATE OF CALIFORNIA

REVISIONS:

	DESCRIPTION	DATE
1		
2		
3		
4		
5		
6		
7		
8		
9		
10		

DATE ISSUED:

PROJECT NO:

SCALE: AS SHOWN

SHEET NUMBER: C4.0

SHEET TITLE: UTILITY PLAN

HOHBACH-LEWIN, INC.
STRUCTURAL & CIVIL ENGINEERS
260 Sheridan Avenue, Suite 150
Palo Alto, CA 94306
(650) 617-5930, Fax (650) 617-5932

HOHBACH-LEWIN #14997.33

Plot Date: Jun 5, 2023 - 10:16 AM

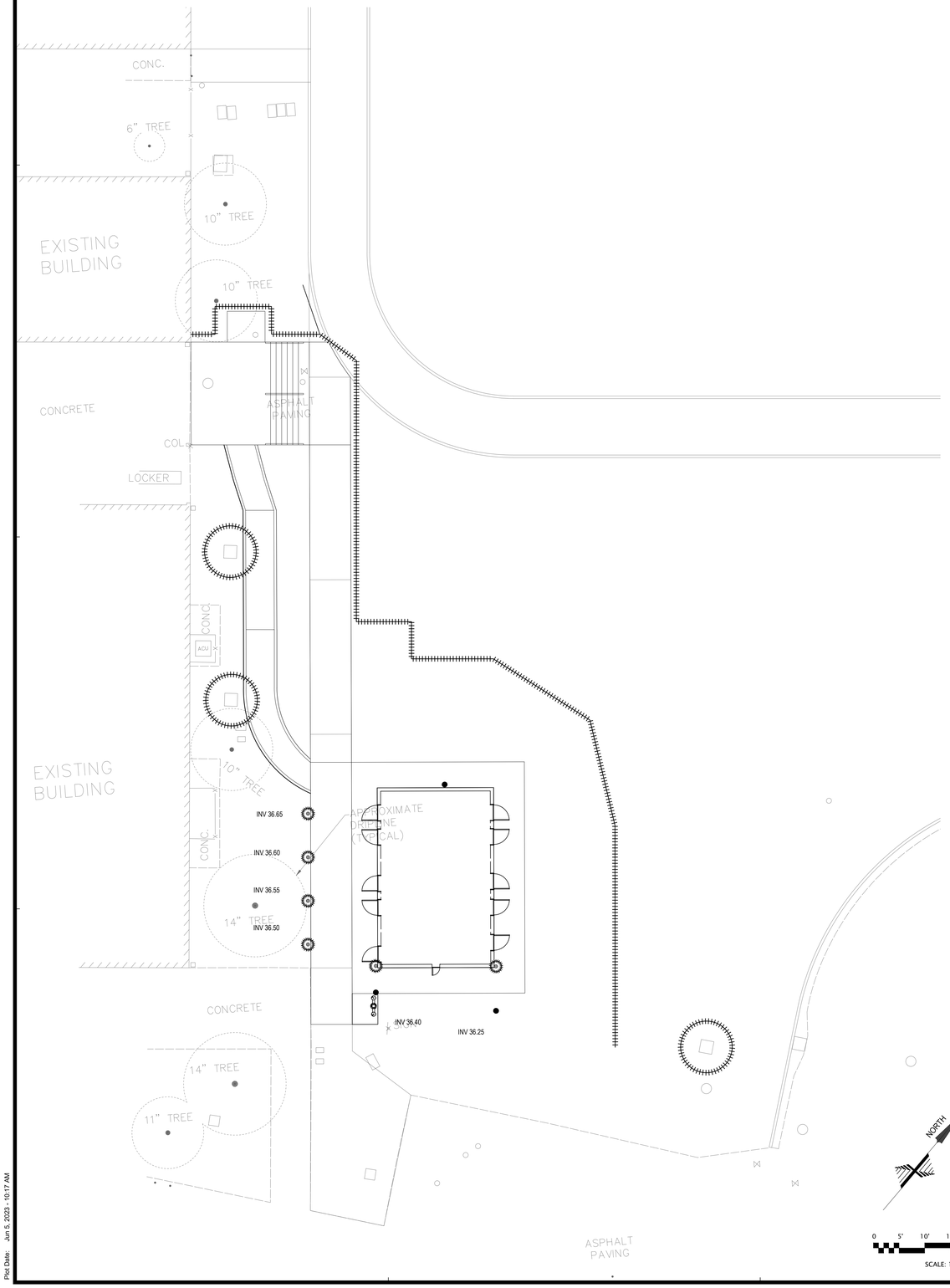

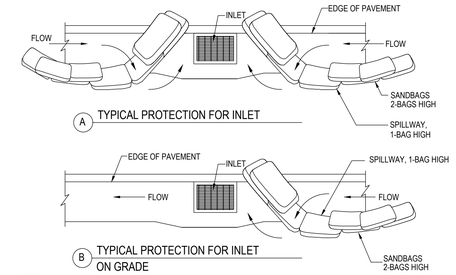

A TYPICAL PROTECTION FOR INLET

B TYPICAL PROTECTION FOR INLET ON GRADE

NOTES:

1. INTENDED FOR SHORT-TERM USE.
2. USE TO INHIBIT NON-STORM WATER FLOW.
3. ALLOW FOR PROPER MAINTENANCE AND CLEANUP.
4. BAGS MUST BE REMOVED AFTER ADJACENT OPERATION IS COMPLETED.
5. NOT APPLICABLE IN AREAS WITH HIGH SILTS AND CLAYS WITHOUT FILTER FABRIC.

4 CATCH BASIN PROTECTION ALONG GUTTERS

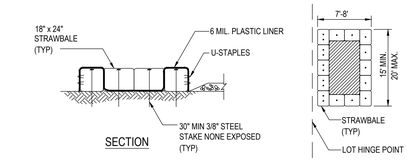

SECTION

NOTES:

1. WHEN WASHING ON-SITE, USE DESIGNATED, BERMED WASH AREAS TO PREVENT WASHWATER CONTACT WITH STORM WATER, CREEKS, RIVERS, AND OTHER WATER BODIES. THE WASH AREA CAN BE SLOPED FOR WASH WATER COLLECTION AND SUBSEQUENT INFILTRATION INTO THE GROUND.
2. LOCATE WASHOUT AREA AT LEAST 50 FEET FROM STORM DRAINS, OPEN DITCHES, OR WATER BODIES. DO NOT ALLOW RUNOFF FROM THIS AREA BY CONSTRUCTING A TEMPORARY PIT OR BERMED AREA LARGE ENOUGH FOR LIQUID AND SOLID WASTE.
3. WASH OUT WASTES INTO THE TEMPORARY PIT WHERE THE CONCRETE CAN SET, BE BROKEN UP, AND THEN DISPOSED OF PROPERLY.

1 CONCRETE WASH AREA

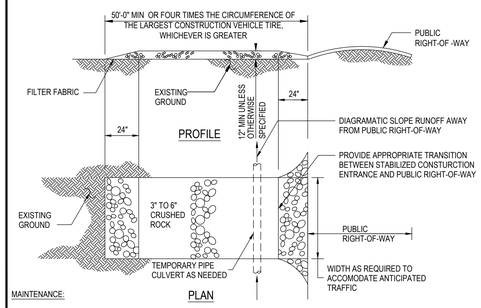

PLAN

MAINTENANCE:

1. THE ENTRANCE SHALL BE MAINTAINED IN A CONDITION THAT WILL PREVENT TRACKING OR FLOWING SEDIMENT ONTO PUBLIC RIGHTS-OF-WAY. THIS MAY REQUIRE PERIODIC TOP DRESSING WITH ADDITIONAL STONE AND REPAIR OR CLEAN OUT OF TRAPPED SEDIMENT.
2. ALL SEDIMENT SPILLED, DROPPED, WASHED, OR TRACKED ONTO THE PUBLIC RIGHT-OF-WAY SHALL BE REMOVED IMMEDIATELY.
3. WHEN NECESSARY, WHEELS SHALL BE CLEANED TO REMOVE SEDIMENT PRIOR TO ENTRANCE ONTO PUBLIC RIGHTS-OF-WAY. THIS SHALL BE DONE AT AN AREA STABILIZED WITH CRUSHED STONE, WHICH DRAINS INTO AN APPROVED SEDIMENT TRAP OR SEDIMENT BASIN.

5 STABILIZED CONTRUCTION ENTRANCE

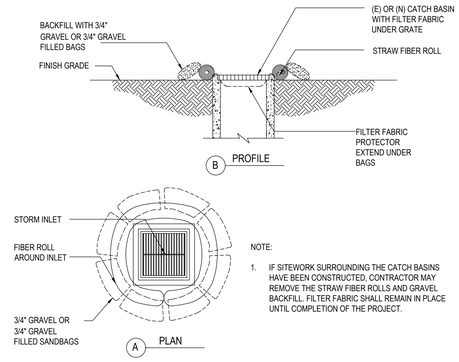

NOTE:

1. IF SITEWORK SURROUNDING THE CATCH BASINS HAVE BEEN CONSTRUCTED, CONTRACTOR MAY REMOVE THE STRAW FIBER ROLLS AND GRAVEL BACKFILL. FILTER FABRIC SHALL REMAIN IN PLACE UNTIL COMPLETION OF THE PROJECT.

2 CATCH BASIN PROTECTION (TYP.)

LEGEND

- CONCRETE WASHOUT, SEE DETAIL 1/-
- CATCH BASIN PROTECTION, SEE DETAIL 2/-
- FIBER ROLL, SEE DETAIL 3/-
- CATCH BASIN PROTECTION ALONG GUTTERS SEE DETAIL 4/-
- STABILIZED CONSTRUCTION ENTRANCE, SEE DETAIL 5/-

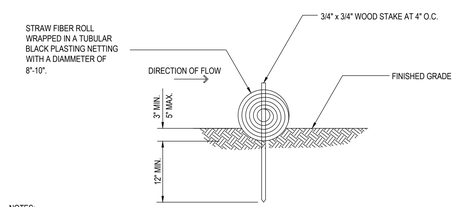

NOTES:

1. FIBER ROLL COMPOSED OF BIO-DEGRADEABLE FIBERS STUFFED INTO A PHOTO-DEGRADABLE OPEN WEAVE NETTING.
2. FIBER ROLL EROSION BARRIER TRAPS SEDIMENT AND REDUCES SHEET AND HILL SIDE EROSIONS BY REDUCING SLOPE GRADIENT. IT INCREASING INFILTRATION RATES AND BY PRODUCING A FAVORABLE ENVIRONMENT FOR PLANT ESTABLISHMENT.
3. FIBER ROLL INSTALLATION REQUIRES THE PLACEMENT AND SECURE STAKING OF THE FIBER ROLL IN A TRENCH 3"-5" DEEP, DUG ON CONTOUR , RUNOFF MUST NOT BE ALLOWED TO RUN UNDER OR AROUND FIBER ROLL.

3 FIBER ROLL

IDENTIFICATION STAMP
DIV. OF THE STATE ARCHITECT
APP: 01-120592 INC:
REVIEWED FOR
SS ☑ FLS ☑ ACS ☑
DATE: 7/11/2023

OWNER: SAN RAFAEL CITY SCHOOLS

PROJECT NAME: VENETIA VALLEY SCHOOL MIDDLE SCHOOL RESTROOM ADDITION

CLIENT ADDRESS: 177 N SAN PEDRO RD, SAN RAFAEL, CA 94903

SEAL:

REGISTERED PROFESSIONAL ENGINEER DANIEL G. ... NO. C38406 CIVIL STATE OF CALIFORNIA

REVISIONS:

	DESCRIPTION	DATE
1		
2		
3		
4		
5		
6		
7		
8		
9		
10		

DATE ISSUED:

PROJECT NO:

SCALE: AS SHOWN

SHEET NUMBER: C5.0

SHEET TITLE: EROSION CONTROL PLAN

HOHBACH-LEWIN, INC.
STRUCTURAL & CIVIL ENGINEERS
260 Sheridan Avenue, Suite 150
Palo Alto, CA 94306
(650) 617-5930, Fax (650) 617-5932

HOHBACH-LEWIN #14997.33

Plot Date: Jun 5, 2023 - 10:17 AM

ACCESSIBLE PARKING CALCULATION	
PARKING LOT A	**PARKING LOT B**
USE: STAFF AND VISITOR PARKING	USE: STAFF ND VISITOR PARKING
TOTAL NUMBER OF STALLS: 38	TOTAL NUMBER OF STALLS: 35
VAN ACCESSIBLE STALLS REQUIRED: 1	VAN ACCESSIBLE STALLS REQUIRED: 1
VAN ACCESSIBLE STALLS PROVIDED: 1	VAN ACCESSIBLE STALLS PROVIDED: 1
TOTAL ACCESSIBLE STALLS (VAN + STANDARD) REQUIRED: 2	TOTAL ACCESSIBLE STALLS (VAN + STANDARD) REQUIRED: 2
TOTAL ACCESSIBLE STALLS (VAN + STANDARD) PROVIDED: 3	TOTAL ACCESSIBLE STALLS (VAN + STANDARD) PROVIDED: 2

REFERENCE SHEET A1.1 FOR CODE ANALYSIS

OVERALL SITE PLAN 1" = 40'-0" 1

DSA 810

FIRE & LIFE SAFETY SITE CONDITIONS SUBMITTAL

Division of the State Architect (DSA) documents referenced within this publication are available on the DSA Forms or DSA Publications webpages.

To facilitate the Division of the State Architect's (DSA) fire and life safety plan review of project site conditions, DSA requires the design professional to provide the following information at time of project submittal for projects consisting of construction of a new campus, construction of new building(s), additions to existing buildings, and for site alternate design means for fire department emergency vehicle access, and fire suppression water supply.

Information associated with compliance items 1 through 3 below is to be provided for all project types indicated above. Information associated with items 4 through 7 is to be completed when an alternate means is utilized. Acknowledgement by the school district and signature from the Local Fire Authority (LFA) is only required when an alternate design means is being requested.

The Project Information and Fire & Life Safety Information sections are to be completed for all projects and imaged onto the fire access site plan. When an alternate design/means is proposed, all sections on pages 1 and 2 are to be completed and imaged on the fire access site plan.

For additional information refer to the instructions at the end of this form and DSA Policy *PL 09-01: Fire Flow for Buildings*.

PROJECT INFORMATION	
School District/Owner:	San Rafael City Schools
Project Name/School:	Venetia Valley School Restroom Addition
Project Address:	177 N San Pedro Rd, San Rafael, CA 94903

FIRE & LIFE SAFETY INFORMATION				
1.	Has a fire hydrant flow test been performed within the past 12 months? *(If yes, provide a copy of the test data.)*	Yes ☒		No ☐
2.	Was the fire hydrant water flow test performed as part of this LFA review?	Yes ☐		No ☑
3.	Is the project located within a designated fire hazard severity zone (FHSZ) as established by Cal-Fire? *(If yes, indicate FHSZ classification below.)*	Yes ☐		No ☑
	Refer to the following website for FHSZ locations: http://egis.fire.ca.gov/FHSZ/	Moderate ☐	High ☐	Very High ☐
	Wildland Interface Area (WIFA) *(If any designations are checked, project design must meet the requirements of CBC Chapter 7A.)*			WIFA ☐

DSA 810

FIRE & LIFE SAFETY SITE CONDITIONS SUBMITTAL

CONDITION MEANS AND METHODS RESOLUTION		ALTERNATE ACCEPTED			
		Yes	No	N/A	N/R
4.	Emergency vehicle access roadways do not meet CFC requirements.			x	
4a.	**Acceptable Alternate:** Emergency vehicle and personnel access as proposed by the project architect is acceptable for providing fire suppression and protection of life and property.				
5.	**Fire Hydrants:** Number and spacing does not meet CFC requirements.			x	
5a.	**Acceptable Alternate:** Number of fire hydrants and spacing as proposed by the project architect is acceptable for fire suppression and protection of life and property.				
6.	**Fire Hydrants:** Water flow and pressure are less than CFC minimum.			x	
6a.	**Acceptable Alternate:** The available flow and pressure is acceptable for providing fire suppression and protection of life and property.				
7.	Location of fire department connection(s) serving fire sprinkler systems or standpipe systems does not meet CFC requirements.			x	
7a.	**Acceptable Alternate:** The location of fire department connection serving the fire sprinkler system and/or standpipe system is acceptable for providing fire suppression and protection of life and property.				

School District Acceptance of Acceptable Design Alternates

By signing this form, the school district acknowledges and accepts the proposed design as an alternative to California Building Code (CBC) and California Fire Code (CFC) minimum requirements, as indicated by one or more of the conditions indicated at items 4a, 5a, 6a or 7a, for providing fire and life safety protection of life and property.

Accepted by: _____ Title: _____

Signature: _____ Date: _____

LOCAL FIRE AUTHORITY (LFA) INFORMATION	
LFA Agency Name:	
LFA Review Official:	
Title:	Work Phone:
Work Email:	

LFA Reviewer's Signature: _____ Date: _____

DSA 810 FORM

FUNCTION		EXISTING DSA APPLICATION HISTORY		
			DSA App #	Date Certified
BUILDING A	LIBRARY	BUILDING A	APPL # 105957 APPL # 26987	11/30/2016 04/12/1967
BUILDING B	GYM	BUILDING B	APPL # 18374 APPL # 26987 APPL # 34077 APPL # 34652 APPL # 01-105957	06/22/1960 04/12/1967 04/02/1973 07/12/1973 11/30/2016
BUILDING C	ADMIN	BUILDING C	APPL # 8426 APPL # 34077 APPL # 01-105957	03/17/1952 04/02/1973 11/30/2016
BUILDING D	MULTIPURPOSE	BUILDING D	APPL # 117438	07/20/21
BUILDING E	CLASSROOMS	BUILDING E	APPL # 117438	07/20/21
BUILDING G	CLASSROOMS	BUILDING G	APPL # 19093	06/28/1960
BUILDING H	CLASSROOMS	BUILDING H	APPL # 19093 APPL # 34077	06/28/1960 04/02/1973
BUILDING I	CLASSROOMS	BUILDING I	APPL # 27434	05/11/1967
BUILDING K	RESTROOM (PORTABLE)	BUILDING K	APPL # 01-104884	8/23/2006
BUILDING L1-3	CLASSROOMS (PORTABLE)	BUILDING L1-3	APPL # 01-106302	12/20/2016
BUILDING P1-4	CLASSROOMS (PORTABLE)	BUILDING P1-4	APPL # 01-111334	6/27/2011
BUILDING P5-6	CLASSROOMS (PORTABLE)	BUILDING P5-6	APPL # 01-115903	2/7/2017

DSA APPLICATION NUMBER

- S01 EXISTING ACCESSIBLE PARKING PER 01-117438- 2/A05.1(CCD80)
- D02 DEMO (E) RESTROOM - AFTER FINAL COMPLETION OF NEW RESTROOMS
- D03 DEMO DOOR FRAME AND HARDWARE, ENTIRE FLOOR FINISH, WALLS, ROOF - CEILING
- D04 REMOVE ALL PLUMBING FIXTURES AND ASSOCIATED PIPING AS REQ'D W/ IN 5FT OF REMOVED BDLG. SALVAGE FOR REUSE
- S05 EXISTING ACCESSIBLE RAMP PER 01-117438 REF. 1/A05.1(CCD 80)
- S06 EXISTING ACCESSIBLE GATES PER 01-117438, REF. 9/A04.1(INCREMENT 1
- S07 EXISTING TRACK AND ACCESSIBLE PATH,
- S08 EXISTING ACCESSIBLE PARKING AND PATH OF TRAVEL, REF. CIVIL
- S09 NOT USED
- S10 EXISTING FACE OF CURB
- S11 EXISTING ACCESSIBLE DROP OFF PER 01-117438 C3.0 (CCD B79).
- S12 EXISTING TOW AWAY PARKING SIGN
- S13 EXISTING ACCESSIBLE PARKING AND STANDARD PARKING STALLS
- S14 EXISTING ACCESSIBLE GATE AND FENCING, REF. DSA A# 01-119706-
- S15 EXISTING CHAINLINK FENCING.
- S16 EXISTING FENCE TO REMAIN. PROTECT IN PLACE.
- S17 EXISTING VEHICULAR GATE
- S18 (N) CONCRETE SIDEWALK , REFER TO CIVIL DWGS.
- S19 EXISTING TREES TO REMAIN
- S20 EXISTING ACCESS GATE & KNOB GATE
- S21 (N) RESTROOMS, REFER TO SHEETS A11.2 & A11.1
- S22 (N) CONCRETE CURB, REFER TO CIVIL DET. 2/C3.0
- S23 (N) DEPRESS SLAB & FLOOR SLOPE DRAIN, REFER TO CIVIL DWG.
- S24 (N) PEDESTAL DRINKING FOUNTAIN, REFER TO CIVIL & PLUMBING DWG.
- S25 (N) CONCRETE PAVING, REFER TO CIVIL DWGS
- S26 (N) CONCRETE STAIRS/ RAILING, REFER TO CIVIL & ARCH. DWGS.
- S27 (N) SLOPE CONCRETE WALKWAY, REFER TO CIVIL DWGS
- S28 (E) FIRE ACCESS LANE, 20'-0" MIN. WIDE.
- S29 NOT USED

NOTE:
1. SLOPE CONCRETE FLOOR 2% MAX. TO FLOOR DRAIN IN RESTROOMS
2. DEPRESS CONCRETE FLOOR SLAB 1" & 1.5" IN THE RESTROOMS FOR FLOOR TILE & MUD BED TO SLOPE TO THE FLOOR.

OVERALL SITE PLAN KEYNOTES

PATH OF TRAVEL
PATH OF TRAVEL (P.O.T) AS INDICATED MEETS THE FOLLOWING REQUIREMENTS:
1. IS A BARRIER-FREE ACCESSIBLE ROUTE WITHOUT ANY ABRUPT LEVEL CHANGES EXCEEDING 1/2" BEVELED AT A SLOPE NOT STEEPER THAN 1:2 EXCEPT THAT LEVEL CHANGES ARE 1/4" MAX VERTICAL & IS AT LEAST 48" WIDE.
2. SURFACE SHALL BE STABLE, FIRM AND SLIP RESISTANT.
3. CROSS-SLOPE SHALL NOT BE STEEPER THAN 1:48 AND RUNNING SLOPE SHALL NOT BE STEEPER THAN 1:20 UNLESS OTHERWISE INDICATED (SEC 11B-403.3)
4. P.O.T. SHALL BE MAINTAINED FREE OF OVERHANGING OBSTRUCTIONS TO 80" MINIMUM (SECTION 11B-307.4) AND PROTRUDING OBJECTS GREATER THAN 4"
PROJECTION FROM WALL SURFACE BETWEEN 27" AND 80" ABOVE FINISH FLOOR
OR GROUND (SECTION 11B-307.2)
5. PROVIDE FLUSH TRANSITIONS AT ANY ADJOINING JOINTS BETWEEN DIFFERENT WALK SURFACES IN P.O.T.

DESIGN PROFESSIONAL IN GENERAL RESPONSIBLE CHARGE STATEMENT:
THE P.O.T. IDENTIFIED IN THESE CONSTRUCTION DOCUMENTS IN COMPLIANT WITH THE CURRENT APPLICABLE CALIFORNIA BUILDING CODE ACCESSIBILITY PROVISIONS FOR **PATH OF TRAVEL REQUIREMENTS FOR ALTERATIONS, ADDITIONS AND STRUCTURAL REPAIRS.** AS PART OF THE DESIGN OF THIS PROJECT, THE POT WAS EXAMINED AND ANY ELEMENTS, COMPONENTS OR PORTIONS OF THE P.O.T. THAT WERE DETERMINED TO BE NONCOMPLIANT 1) HAVE BEEN IDENTIFIED AND 2) THE CORRECTIVE WORK NECESSARY TO BRING THEM INTO COMPLIANCE HAS BEEN INCLUDED WITHIN THE SCOPE OF THIS PROJECT'S WORK THROUGH DETAILS, DRAWINGS AND SPECIFICATIONS INCORPORATED INTO THESE CONSTRUCTION DOCUMENTS. ANY NONCOMPLIANT ELEMENTS, COMPONENTS OR PORTIONS OF THE POT THAT WILL NOT BE CORRECTED BY THIS PROJECT BASED UPON THE VALUATION THRESHOLD OR A FINDING OF UNREASONABLE HARDSHIP ARE SO INDICATED IN THESE CONSTRUCTION DOCUMENTS.

DURING CONSTRUCTION, IF P.O.T. ITEMS WITHIN THE SCOPE OF THE PROJECT REPRESENTED AS CODE COMPLIANT ARE FOUND TO BE NONCONFORMING BEYOND REASONABLE CONSTRUCTION TOLERANCES, THEY SHALL BE BROUGHT INTO COMPLIANCE WITH THE CBC AS PART OF THIS PROJECT BY MEANS OF A CONSTRUCTION CHANGE DOCUMENT.

- PROPERTY LINE
- LIMITS OF WORK FOR THIS PROJECT
- FIRE HOSE PULL
- FIRE TRUCK ACCESS LANE (MIN. 20'-0" WIDTH)
- (N) RESTROOMS
- (N) CONCRETE SIDEWALK, REFER TO CIVIL DWGS
- (E) RESTROOMS TO BE DEMOLISHED
- (E) CONCRETE SIDEWALK.

SITE PLAN LEGEND - DSA

IDENTIFICATION STAMP
DIV. OF THE STATE ARCHITECT
APP: 01-120592 INC:
REVIEWED FOR
SS ☑ FLS ☑ ACS ☑
DATE: 7/11/2023

OWNER: San Rafael City Schools

PROJECT NAME: Venetia Valley - Middle School Restroom Addition

CLIENT ADDRESS: 177 N SAN PEDRO RD., SAN RAFAEL, CA 94903

LICENSED ARCHITECT ROBERT M. SIMONE No. C-18301 Jan 31, 2025 STATE OF CALIFORNIA

REVISIONS:

	DESCRIPTION	DATE
1		
2		
3		
4		
5		
6		
7		
8		
9		
10		

PROJECT NO: 2022-40125
DATE ISSUED: 06.29.2023
SCALE: As indicated

A1.0

OVERALL SITE PLAN

SVA ARCHITECTS

6 HUTTON CENTRE DR, SUITE 1150 SANTA ANA, CA 92707
T 949.809.3380 WWW.SVA-ARCHITECTS.COM

THIS DOCUMENT CONTAINS INFORMATION PROPRIETARY TO SVA ARCHITECTS INC. AND IS FURNISHED IN CONFIDENCE FOR THE LIMITED PURPOSE OF EVALUATION, BIDDING OR REVIEW. THIS DOCUMENT OR ITS CONTENTS MAY NOT BE USED FOR ANY OTHER PURPOSE AND MAY NOT BE REPRODUCED OR DISCLOSED TO OTHERS WITHOUT THE PRIOR WRITTEN CONSENT OF SVA ARCHITECTS INC. ALL RIGHTS RESERVED. © COPYRIGHT 2018.

NOTES:
1. LENGTH, HEIGHT AND LOCATION TO SUIT ITEMS BEING FASTENED. SEE ANCHORAGE DETAIL OF SPECIFIC ITEMS FOR ADDITIONAL INFORMATION.
2. ATTACH TO THREE STUDS MIN.
3. USE DBL. STUDS WHEN STUD IS SUPPORTING MORE THAN (2) BLOCKING STUDS

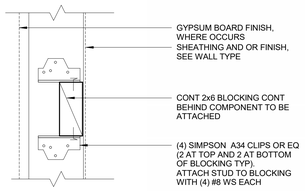

WOOD BACKING DETAIL | 3" = 1'-0" | 16

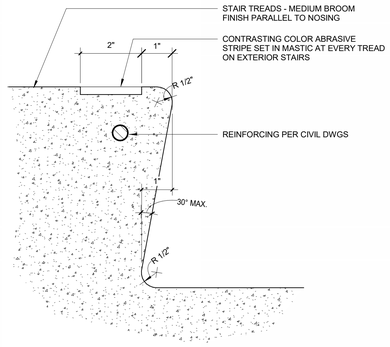

CONCRETE STAIR NOSING | 6" = 1'-0" | 12

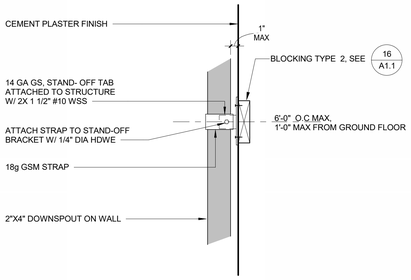

DOWNSPOUT AT WALL

DOWNSPOUT ATTACHMENT DETAIL | 1 1/2" = 1'-0" | 15

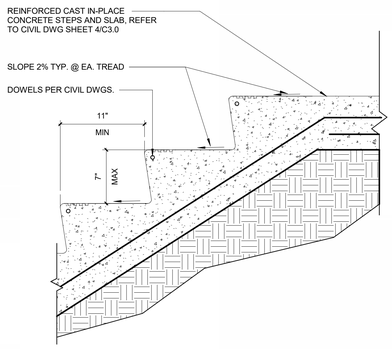

CONCRETE STAIR ON GRADE AT TOP | 1 1/2" = 1'-0" | 11

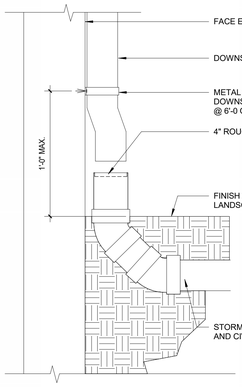

DOWNSPOUT AT STORM DRAIN | 3" = 1'-0" | 14

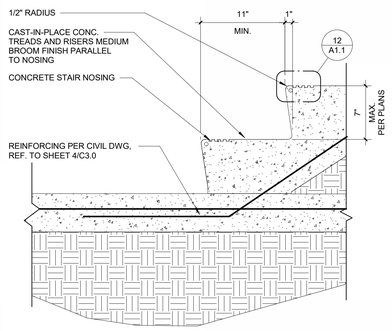

NOTES:
1. NO MORE THAN 3/8" VARIATION IN RISERS, MAXIMUM
2. REFER TO CIVIL DWGS SHEET C3 FOR ADDITIONAL INFORMATION

CONCRETE STAIR ON GRADE | 1 1/2" = 1'-0" | 10

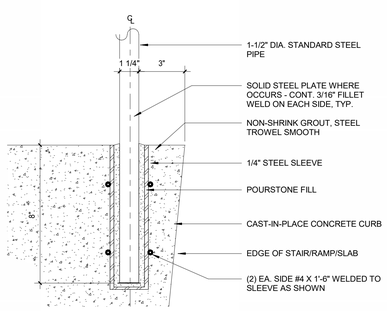

POST ATTACHMENT | 3" = 1'-0" | 13

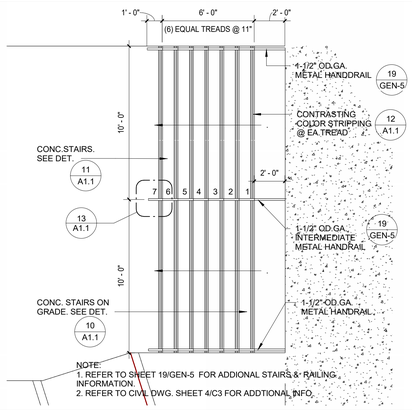

NOTE:
1. REFER TO SHEET 19/GEN-5 FOR ADDIONAL STAIRS & RAILING INFORMATION.
2. REFER TO CIVIL DWG. SHEET 4/C3 FOR ADDTIONAL INFO.

EXTERIOR CONCRETE STAIR - PLAN | 1/4" = 1'-0" | 9

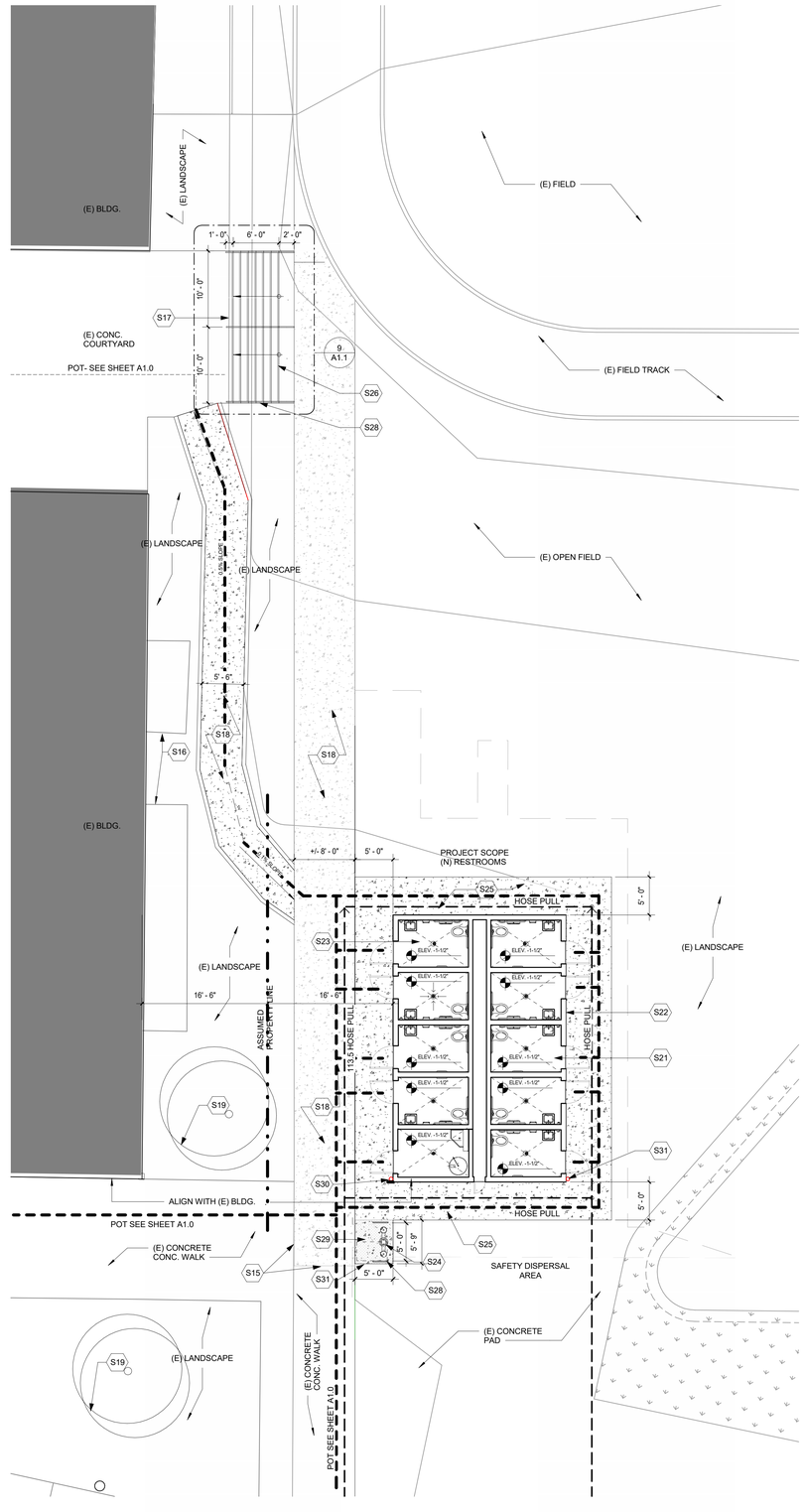

SITE PLAN | 1/8" = 1'-0" | 1

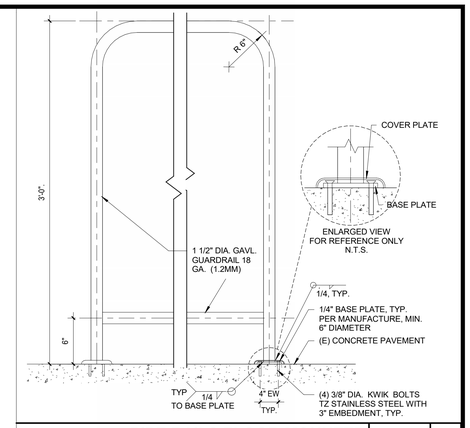

PIPE RAILS FLOOR MOUNTED | 1 1/2" = 1'-0" | 2

S15	(E) CONCRETE WALK TO BE ADJUSTED BASED ON NEW EXTENDED CONCRETE SIDEWALK WORK
S16	(E) FENCE TO REMAIN, PROTECT IN PLACE
S17	(E) CONCRETE WALK TO BE ADJUSTED BASED ON NEW EXTENDED CONCRETE STAIR WORK
S18	(N) CONCRETE SIDEWALK, REFER TO CIVIL DWGS.
S19	(E) TREE TO REMAIN, PROTECT IN PLACE
S20	NOT USED
S21	(N) RESTROOMS, REFER TO SHEETS A11.1 & A11.2
S22	(N) CONCRETE CURB, REFER TO CIVIL & STRUCTURAL DWG.
S23	(N) DEPRESS SLAB & FLOOR SLOPE DRAIN, REFER TO CIVIL DWG.
S24	(N) PEDESTAL DRINKING FOUNTAIN, REFER TO 13,14,&17/GEN-4 AND SCD & SPD.
S25	(N) CONCRETE PAVING, REFER TO CIVIL DWGS
S26	(N) CONCRETE STAIRS/ RAILING, REFER TO CIVIL 4./C3. & ARCH.DET. 9/ -
S27	(N) SLOPE CONCRETE WALKWAY, REFER TO CIVIL DWGS
S28	(N) 1 1/2" DIA. STEEL TUBE RAILING, SEE DET. 13/-
S29	(N) NON- SLIP BROOM FINISH CONCRETE SLAB SURFACE. SLOPE CONCRETE SLAB 2% MAX., SCD
S30	(N) GA. DOWNSPOUT LEADER, SEE DET. 14/- & SCD 1/C40.
S31	(N) 1 1/2" DIA. STEEL TUBE GUARDRAIL. SEE DET. 2/-

NOTE:
1. SLOPE CONCRETE FLOOR 2% MAX. TO FLOOR DRAIN IN RESTROOMS
2. DEPRESS CONCRETE FLOOR SLAB 1" & 1.5" IN THE RESTROOMS FOR FLOOR TILE & MUD BED TO SLOPE TO THE FLOOR.
3. REFER TO SHEET A1.0 OVERALL SITE PLAN FOR BUILDING PATH OF TRAVEL

SITE PLAN KEYNOTES

1. MINIMUM HEADROOM CLEARANCE AT STAIRS AND RAMPS SHALL BE 6'-8" MEASURED VERTICALLY FROM A PLANE PARALLEL AND TANGENT TO THE TREAD NOSING TO THE SOFFIT, CEILING OR OTHER PERMANENT FEATURE AT ALL POINTS IN THE STAIR OR RAMP.
2. STAIRS
   - A. HANDRAILS MUST BE 34 TO 38 INCHES ABOVE THE NOSING OF THE TREADS AND MUST EXTEND IN THE DIRECTION OF THE STAIR RUN FOR AT LEAST 12" BEYOND THE TOP NOSING AND 12" PLUS THE TREAD WIDTH BEYOND THE BOTTOM NOSING.
   - B. WHERE THE EXTENSION OF THE HANDRAIL IN THE DIRECTION OF THE STAIR RUN WOULD CREATE A HAZARD, THE EXTENSION WILL BE MADE AT RIGHT ANGLES, ON THE FACE OF THE RETURNING WALL. WHERE THE STAIRS ARE CONTINUOUS FROM LANDING TO LANDING, THE INNER RAIL SHALL BE CONTINUOUS AND NEED NOT EXTEND ONTO THE LANDING.
   - C. ENDS SHALL BE RETURNED OR SHALL TERMINATE IN A NEWEL POST OR SAFETY TERMINAL.
   - D. HANDRAILS PROJECTING FROM A WALL SHALL HAVE A SPACE OF 1-1/2" BETWEEN THE WALL AND THE HANDRAIL.
   - E. THE HAND GRIP PORTION OF THE HANDRAILS SHALL NOT BE LESS THAN 1-1/4" NOR MORE THAN 1-1/2" IN CROSS-SECTIONAL DIMENSION OR THE SHAPE SHALL PROVIDE AN EQUIVALENT GRIPPING SURFACE AND SHALL HAVE A SMOOTH SURFACE WITH NO SHARP OR ABRASIVE CORNERS AND ALL EDGES MUST HAVE A MINIMUM 1/8" RADIUS.
   - F. THE UPPER APPROACH AND THE LOWER TREAD OF EACH INTERIOR STAIR SHALL BE MARKED BY A STRIP OF CLEARLY CONTRASTING COLOR AT LEAST 2 INCHES WIDE PLACED PARALLEL TO AND NOT MORE THAN 1 INCH FROM THE NOSE OF THE STEP OR LANDING TO ALERT THE VISUALLY IMPAIRED. THE FULL WIDTH OF THE STRIP OF SHALL BE OF A MATERIAL THAT IS AT LEAST AS SLIP RESISTANT AS THE OTHER TREADS OF THE STAIR.
   - G. ALL TREAD SURFACES SHALL BE SLIP RESISTANT.
   - H. TREADS SHALL HAVE A SMOOTH, ROUNDED OR CHAMFERED EXPOSED EDGE AND NO ABRUPT EDGES AT THE NOSING (LOWER FRONT EDGE).
   - I. NOSING SHALL NOT PROJECT MORE THAN 1-1/2" PAST THE FACE OF THE RISER BELOW.
   - J. STAIR RISERS SHALL BE SUFFICIENTLY SOLID. OPEN RISERS ARE NOT PERMITTED.
3. HANDRAILS, GUARDRAILS ASSOCIATED WITH WALKING SURFACES LESS THAN 30" ABOVE ADJACENT GRADE (EXCLUDING POST BASE CONNECTIONS PER THE 'EXCEPTION' LANGUAGE IN SECTION 1705A.2.1); FILLET WELDS SHALL NOT BE GROUND FLUSH.

TYPICAL STAIR NOTES

(N) CONCRETE SIDEWALK, REFER TO CIVIL DWGS.

(N) NON SLIP SMOOTH FIN. CONCRETE SLAB SURFACE, REFER TO CIVIL DWGS.

SITE PLAN LEGEND

BUILDING TYPE: V-B NON SPRINKLER

OCCUPANCY TYPE :E

TOTAL BUILDING AREA: 805 SF
BASIC ALOWABLE BUILDING AREA: 9,500 SQ. FT.
805 SQ. FT. < 9,500 SQ. FT.

TOTAL OCCUPANT LOAD: 40

BUILDING HT: ONE STORY

FIRE-RESISTIVE REQUIREMENTS
PER CBC TABLE 601

ELEMENT	RATING	NOTES
BEARING WALLS - EXTERIOR	0	
BEARING WALLS - INTERIOR	0	
NON-BEARING WALLS - EXTERIOR	N/A	*EXT. WALLS ALL BEARING*
STRUCTURAL FRAME	0	
NON-BEARING WALLS - INTERIOR	0	
ROOF/CEILING ASSEMBLIES	0	
ROOFING	CLASS B	

CODE ANALYSIS

IDENTIFICATION STAMP
DIV. OF THE STATE ARCHITECT
APP: 01-120592 INC:
REVIEWED FOR
SS ☑ FLS ☑ ACS ☑
DATE: 7/11/2023

OWNER: San Rafael City Schools

PROJECT NAME: Venetia Valley - Middle School Restroom Addition

CLIENT ADDRESS: 177 N SAN PEDRO RD., SAN RAFAEL, CA 94903

LICENSED ARCHITECT
ROBERT M. SIMONE
No. C-18301
Jan 31, 2025
STATE OF CALIFORNIA

REVISIONS:

	DESCRIPTION	DATE
1		
2		
3		
4		
5		
6		
7		
8		
9		
10		

PROJECT NO:	2022-40125
DATE ISSUED:	06.29.2023
SCALE:	As indicated

A1.1

SITE PLAN, STAIRS & EXT. DETAILS

SVA ARCHITECTS
2335 BROADWAY #301 OAKLAND, CA 94612
T 510.267.3180 WWW.SVA-ARCHITECTS.COM

THIS DOCUMENT CONTAINS INFORMATION PROPRIETARY TO SVA ARCHITECTS INC. AND IS FURNISHED IN CONFIDENCE FOR THE LIMITED PURPOSE OF EVALUATION, BIDDING OR REVIEW. THIS DOCUMENT OR ITS CONTENTS MAY NOT BE USED FOR ANY OTHER PURPOSE AND MAY NOT BE REPRODUCED OR DISCLOSED TO OTHERS WITHOUT THE PRIOR WRITTEN CONSENT OF SVA ARCHITECTS INC. ALL RIGHTS RESERVED. © COPYRIGHT 2018.

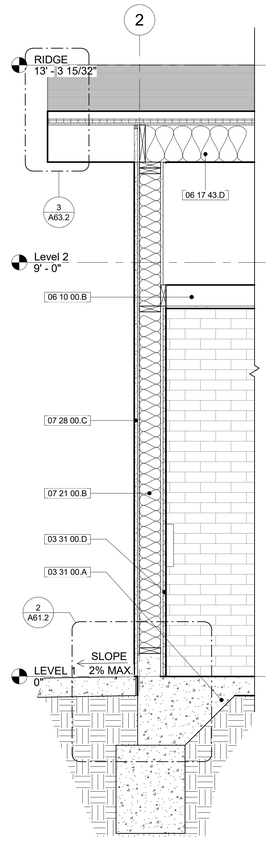

WALL SECTION 2 3/4" = 1'-0" 9

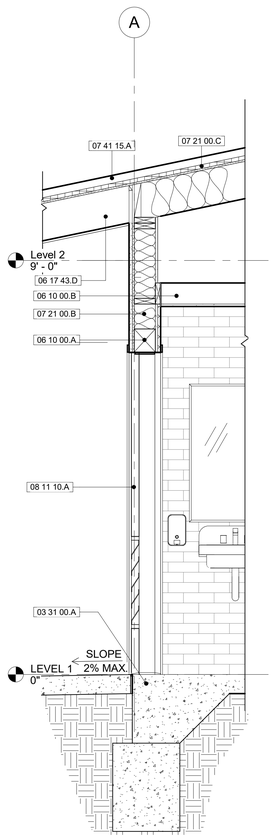

WALL SECTION 1 3/4" = 1'-0" 8

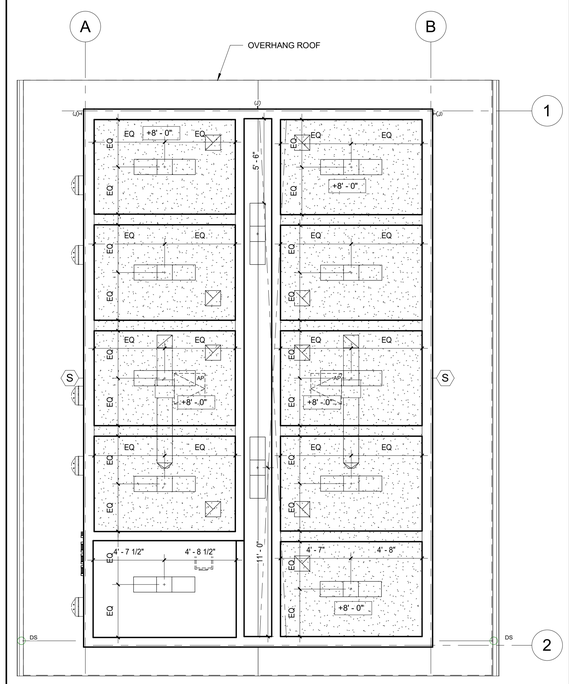

MS RESTROOM - REFLECTED CEILING PLAN 1/4" = 1'-0" 5

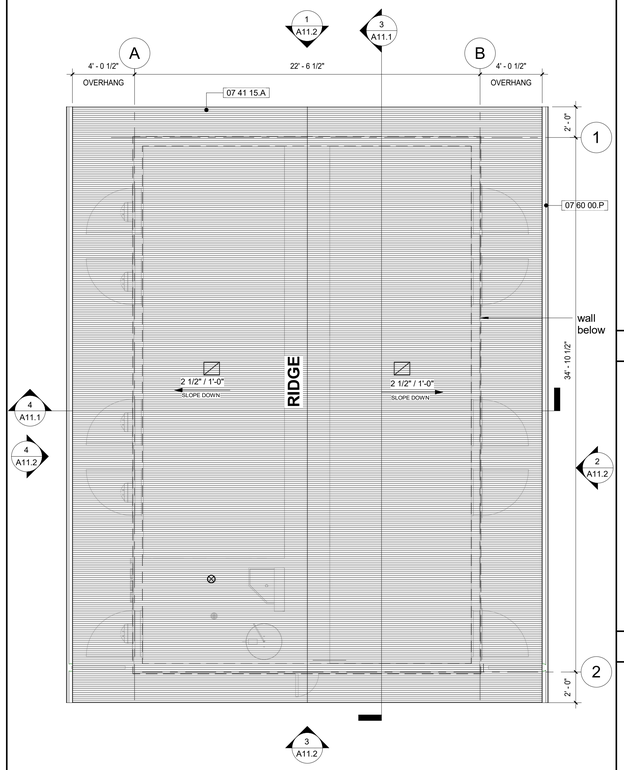

MS RESTROOM - ROOF PLAN 1/4" = 1'-0" 2

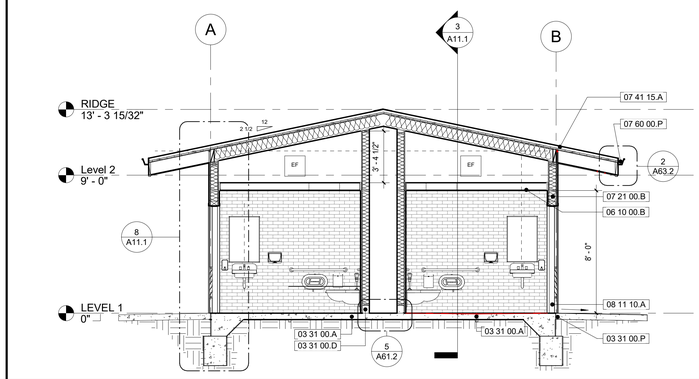

BUILDING SECTION 1 1/4" = 1'-0" 4

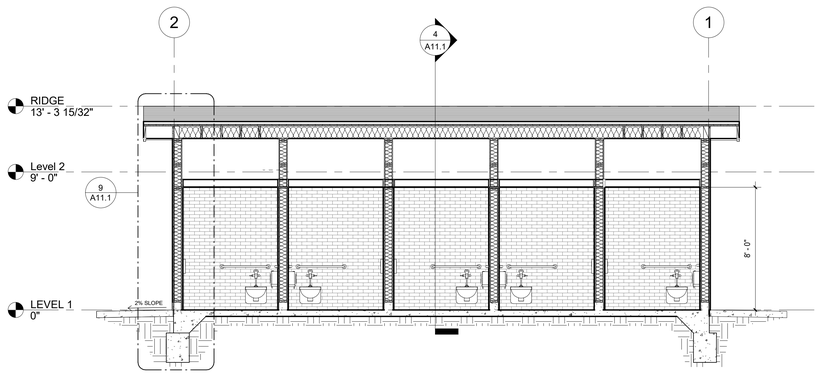

BUILDING SECTION 2 1/4" = 1'-0" 3

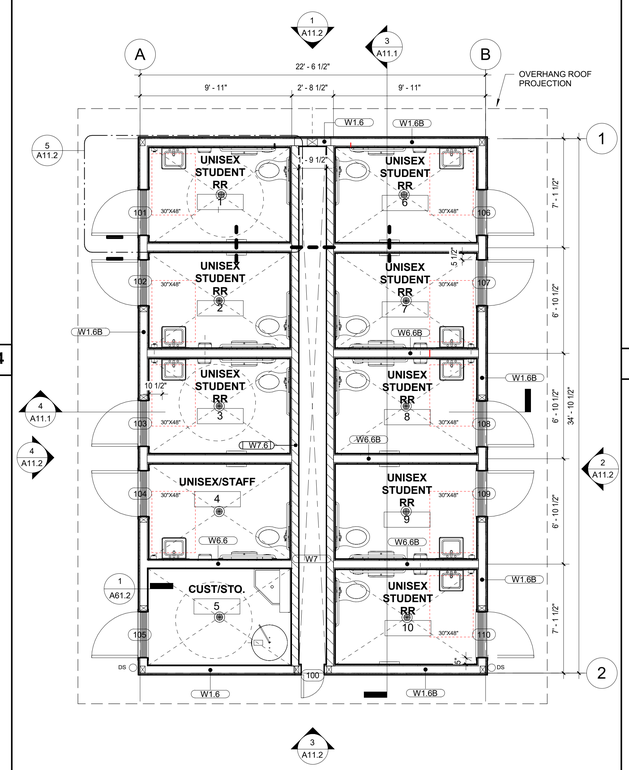

MS RESTROOMS - FLOOR PLAN 1/4" = 1'-0" 1

?	DESCRIPTION
03 31 00.A	CONCRETE SLAB ON GRADE, REFER TO STRUCL.DWGS
03 31 00.D	PLUMBING WALL CONCRETE CURB
03 31 00.P	CONCRETE SIDEWALK SLOPE 2% MAX.,SEE CIVIL DRAWINGS
06 10 00.A	WALL WOOD FRAMING SYSTEM, SAD, SSD
06 10 00.B	SOFFIT WOOF FRAMING SYSTEM, SAD, SSD
06 17 43.D	ROOF WOOD JOIST FRAMING , SSD
07 21 00.B	THERMAL BATT WALL INSULATION, SEE SPECS.
07 21 00.C	THERMAL INSULATION- RIGID
07 28 00.C	CEMENT PLASTER WALL ASSEMBLY, SEE WALL TYPES
07 41 15.A	ROOF TYPE B: STANDING SEAM METAL ROOFING OVER WOOD STRUCTURE, SEE SEE SHEET 1/A63.2
07 60 00.P	METAL GALVANIZED GUTTER, SEE DET. 2/A63.2
08 11 10.A	HOLLOW METAL DOOR AND FRAME SYSTEM REFER TO DOOR SCHEDULE FOR TYPE AND FINISH

PLAN - KEYNOTES

?	DESCRIPTION

RCP - KEYNOTES

	EXHAUST AIR DISCHARGE, SEE MECH. DRAWINGS & ARCH. DET . (8 / A63.1)
	RECESSED EXHAUST FAN, SEE MECH. DRAWINGS
	SUSPENDED FLUORESCENT FIXTURE, SEE ELEC. DRAWINGS*
	WALL MOUNTED EXTERIOR LIGHTING FIXTURE, SEE ELEC. DRAWINGS*
	EXHAUST AIR DISCHARGE UTR. TO ROOF CAP, SEE ELECTRICAL DRAWINGS
S	SPEAKERS, SEE ELECTRICAL DRAWINGS,
J	CAMERAS OFCI , SEE ELECTRICAL DWGS
	EF MECH. EQUIPMENT , SEE ELECTRICAL DWGS
AP	ACCESS PANEL, SEE ELEC. DRAWINGS.
	GYP. BOARD CEILING, REFER TO NOTE 1
	EXPOSED CEILING, REFER TO NOTE 9
	EXTERIOR PLASTER SOFFIT, REFER TO NOTE 3

NOTES:
1. GYPSUM BOARD CEILINGS SHALL BE FRAMED WITH WOOD FRAME JOISTS, U.N.O. SEE DETAIL 13/A61.3 FOR MORE INFORMATION.
2. NOT USED
3. FOR PLASTER DETAILS, SEE DETAIL 1/A61.3.
4. AT ALL ROOMS WITHOUT CEILINGS (LABELLED AS "EXP" ON PLAN AND/OR ON THE FINISH SCHEDULE), ALL EXPOSED SURFACES AND ELEMENTS SHALL BE PAINTED, INCLUDING STRUCTURE, DECK ABOVE, AND ALL UTILITIES INCLUDING PIPING, CONDUITS, DUCTWORK, ETC.
5. PLUMBING, ELECTRICAL, MECHANICAL AND FIRE PROTECTION COMPONENTS ARE SHOWN FOR REFERENCE AND COORDINATION PURPOSES. REFER TO PLUMBING, ELECTRICAL, MECHANICAL AND FIRE PROTECTION DRAWINGS FOR COMPONENT AND SYSTEM QUANTITIES, TYPES AND REQUIREMENTS
6. CENTER LIGHTING FIXTURES BETWEEN OPPOSITE WALLS, U.N.O.
7. ALL DIMENSIONS, NOTES, KEYNOTES AND DETAILS CALLOUTS ARE TYPICAL, U.N.O.
8. SEE SHEET A52.1 FOR INTERIOR FINISH SCHEDULE
9. AT EXPOSED CEILINGS, ALL DUCTS, PIPES AND CONDUITS SHALL RUN PARALLEL OR PERPENDICULAR TO WALL, AND AS CLOSE TO THE DECK ABOVE AS POSSIBLE. PROVIDE ESCUTCHEONS FOR CONDUIT/PIPES AT WALLS WHERE EXPOSED.

* REFER TO ELECTRICAL DRAWINGS FOR LOCATIONS OF EMERGENCY LIGHTING.

RCP LEGEND

	30"X48" MIN. ACCESSIBLE WHEELCHAIR CLEAR FLOOR SPACE
60" MIN. CLR.	60" MIN. ACCESSIBLE WHEELCHAIR CLEAR TURNING SPACE
	WOOD FRAMING STUD WALL PER SHEET A61.1
	PLUMBING WALL PER SHEET A61.1 & A61.2
	EXTERIOR WALL PER SHEET A61.1
1i	WALL TYPE ANNOTATIONS, SEE SHEET A61.1 FOR DETAILS
101	NUMBER INDICATES DOOR PER SCHEDULE, REFER TO SHEET A52.1

FLOOR PLAN GENERAL NOTES:
1. ALL DIMENSIONS ARE TO CENTERLINE OF THE GRID LINES AND/OR TO THE FACE OF STUDS, U.N.O.

2. UNLESS NOTED OTHERWISE, ALL WALLS ARE FULL HEIGHT.

3. REFER TO SHEET GEN-5 FOR TYPICAL ACCESSIBILTY REQUIREMENTS AND DIMENSIONS.

4. REFER TO ENLARGED PLANS 5/A11.2 FOR DIMENSIONS AND CALLOUTS NOT SHOWN HERE.

FLOOR PLAN LEGEND

IDENTIFICATION STAMP
DIV. OF THE STATE ARCHITECT
APP: 01-120592 INC:
REVIEWED FOR
SS ☑ FLS ☑ ACS ☑
DATE: 7/11/2023

OWNER: San Rafael City Schools

PROJECT NAME: Venetia Valley - Middle School Restroom Addition

CLIENT ADDRESS: 177 N SAN PEDRO RD., SAN RAFAEL, CA 94903

LICENSED ARCHITECT
ROBERT M. SIMONE
No. C-18301
Jan 31, 2025
STATE OF CALIFORNIA

REVISIONS:

	DESCRIPTION	DATE
1		
2		
3		
4		
5		
6		
7		
8		
9		
10		

PROJECT NO:	2022-40125
DATE ISSUED:	06.29.2023
SCALE:	As indicated

A11.1

FLOOR & RCP PLAN, INT. ELEV & SECTIONS

SVA ARCHITECTS
6 HUTTON CENTRE DR, SUITE 1150 SANTA ANA, CA 92707
T 949.809.3380 WWW.SVA-ARCHITECTS.COM

THIS DOCUMENT CONTAINS INFORMATION PROPRIETARY TO SVA ARCHITECTS INC. AND IS FURNISHED IN CONFIDENCE FOR THE LIMITED PURPOSE OF EVALUATION, BIDDING OR REVIEW. THIS DOCUMENT OR ITS CONTENTS MAY NOT BE USED FOR ANY OTHER PURPOSE AND MAY NOT BE REPRODUCED OR DISCLOSED TO OTHERS WITHOUT THE PRIOR WRITTEN CONSENT OF SVA ARCHITECTS INC. ALL RIGHTS RESERVED. © COPYRIGHT 2018.

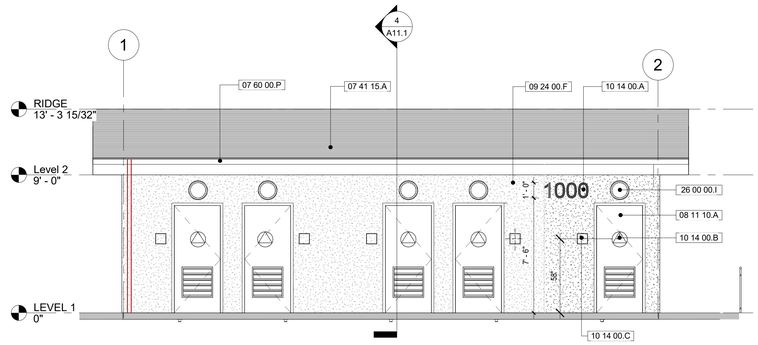

EXTERIOR WEST ELEVATION 1/4" = 1'-0" **4**

?	DESCRIPTION
06 17 43.D	ROOF WOOD JOIST FRAMING , SSD
07 21 00.B	THERMAL BATT WALL INSULATION, SEE SPECS.
07 28 00.C	CEMENT PLASTER WALL ASSEMBLY, SEE WALL TYPES
07 41 15.A	ROOF TYPE B: STANDING SEAM METAL ROOFING OVER WOOD STRUCTURE, SEE SEE SHEET 1/A63.2
07 46 40.A	DOWNSPOUT PIPE - SCHEDULE 40 PIPE, SEE PLUMBING & CIVIL DWGS
07 60 00.P	METAL GALVANIZED GUTTER, SEE DET. 2/A63.2
08 11 10.A	HOLLOW METAL DOOR AND FRAME SYSTEM REFER TO DOOR SCHEDULE FOR TYPE AND FINISH
09 24 00.F	EXTERIOR CEMENT PLASTER, REFER TO SHEET 1/A61.1
10 14 00.A	BUILDING SIGNAGE, SEE DETAIL 10/GEN-4
10 14 00.B	ROOM IDENTIFICATION SIGNAGE,TYP. SEE DETAIL 1&6/GEN-4
10 14 00.C	RESTROOM DOOR SIGNAGE, TYP. SEE DETAIL 1&4/GEN-4
26 00 00.I	SURFACE MOUNTED LIGHT FIXTURE,TYP. SED

KEYNOTES

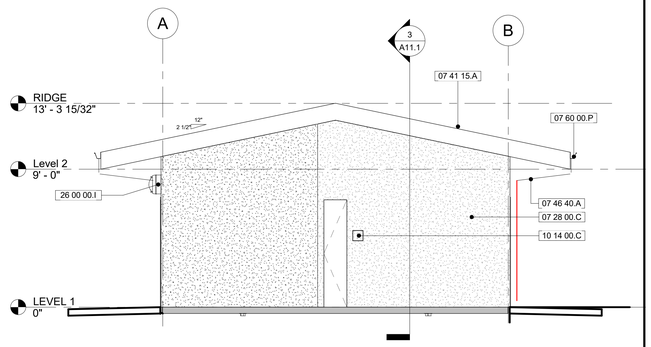

EXTERIOR SOUTH ELEVATION 1/4" = 1'-0" **3**

LEGEND

#	FIXTURE
1	1-1/4" DIA. STAINLESS STEEL GRAB BAR, 42" LENGHT, BOBRICK B-5806X42
1.1	1-1/4" DIA. STAINLESS STEEL GRAB BAR, 36" LENGHT, BOBRICK B-5806X 36
2	SURFACE MOUNTED SOAP DISPENSER - OFCI
3	SURFACE- MOUNTED JUMBO TOILET TISSUE DISPENSER- OFCI
4	WATER CLOSET - REFER TO PLUMBING DWGS
5	24" x 36" FRAMED MIRROR, BOBRICK B-290 2436
6	UTILITY SHELF W/ MOP & BROOM HOLDERS, BOBRICK: B-239 X 34
7	WALL HUNG URINAL, REFER TO PLUMBING DWGS
9	SEAT COVER DISPENSER - OFCI
10	PAPER TOWEL WASTE RECEPTACLE - OFCI
11	WALL MOUNTED MOP & BROOM HOLDER, BOBRICK: B-223X34
12	PAPER TOWEL DISPENSER, OFCI.
13	SANITARY NAPKIN DISPENSER, OFCI.
14	LAVATORY SINK, REFER TO PLUMBING DWGS

* REFER TO SHEET GEN-05 FOR MOUNTING HEIGHTS AND LOCATIONS FOR ALL ACCESSIBLE RESTROOM ACCESSORIES AND FIXTURES.

** REFER TO SHEET GEN-05 FOR SIGNAGE AND MOUNING HEIGHTS.

*** REFER TO GEN-05 FOR PLUMBING ACCESSORIES ATTACHMENT TO WALL DET. 20/GEN-05

PLUMBING FIXTURES REFER TO PLUMBING DWGS. & SPECS.
FOR PLUMBING ACCESSORIES REFER TO SPEC.

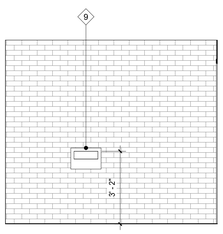

RR1 - INT. ELEV- D 3/8" = 1'-0" **10**

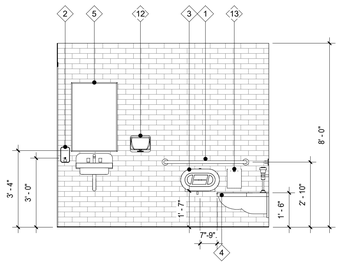

RR1- INT. ELEV - B 3/8" = 1'-0" **6**

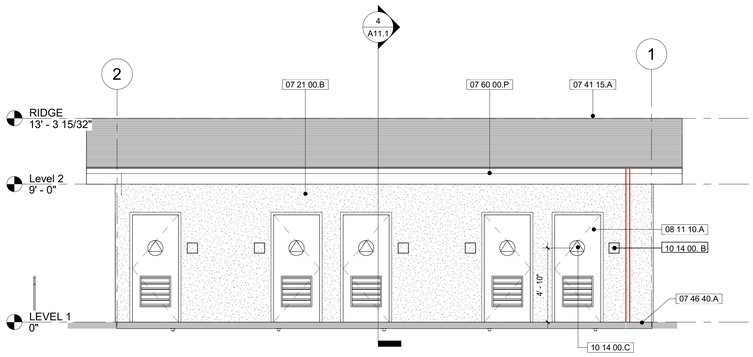

EXTERIOR EAST ELEVATION 1/4" = 1'-0" **2**

RESTROOM ACCESSORY LEGEND

	30"X48" MIN. ACCESSIBLE WHEELCHAIR CLEAR FLOOR SPACE
60" MIN. CLR.	60" MIN. ACCESSIBLE WHEELCHAIR CLEAR TURNING SPACE
	WOOD FRAMING STUD WALL PER SHEET A61.1
	PLUMBING WALL PER SHEET A61.1 & A61.2
	EXTERIOR WALL PER SHEET A61.1
1i	WALL TYPE ANNOTATIONS, SEE SHEET A61.1 FOR DETAILS
101	NUMBER INDICATES DOOR PER SCHEDULE, REFER TO SHEET A52.1

FLOOR PLAN GENERAL NOTES:

1. ALL DIMENSIONS ARE TO CENTERLINE OF THE GRID LINES AND/OR TO THE FACE OF STUDS, U.N.O.

2. UNLESS NOTED OTHERWISE, ALL WALLS ARE FULL HEIGHT.

3. REFER TO SHEET GEN-5 FOR TYPICAL ACCESSIBILTY REQUIREMENTS AND DIMENSIONS.

4. REFER TO ENLARGED PLANS 5/A11.2 FOR DIMENSIONS AND CALLOUTS NOT SHOWN HERE.

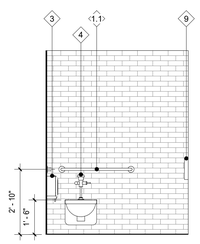

RR1 - INT. ELEV- C 3/8" = 1'-0" **9**

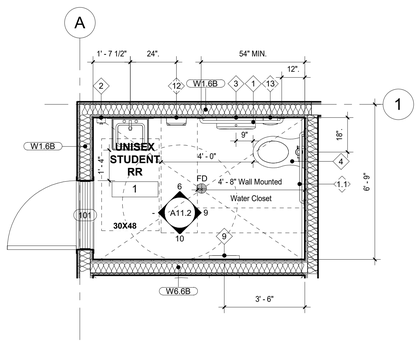

ENLARGED PLAN - STUDENT RR1 3/8" = 1'-0" **5**

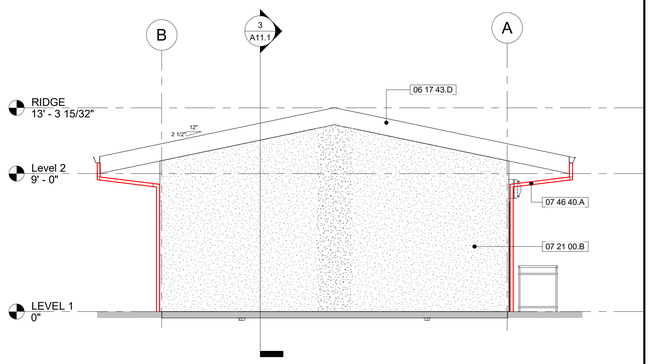

EXTERIOR NORTH ELEVATION 1/4" = 1'-0" **1**

FLOOR PLAN LEGEND

IDENTIFICATION STAMP
DIV. OF THE STATE ARCHITECT
APP: 01-120592 INC:
REVIEWED FOR
SS ☑ FLS ☑ ACS ☑
DATE: 7/11/2023

OWNER: San Rafael City Schools

PROJECT NAME: Venetia Valley - Middle School Restroom Addition

CLIENT ADDRESS: 177 N SAN PEDRO RD., SAN RAFAEL, CA 94903

LICENSED ARCHITECT
ROBERT M. SIMONE
No. C-18301
Jan 31, 2025
STATE OF CALIFORNIA

REVISIONS:

	DESCRIPTION	DATE
1		
2		
3		
4		
5		
6		
7		
8		
9		
10		

PROJECT NO:	2022-40125
DATE ISSUED:	06.29.2023
SCALE:	As indicated

A11.2

FLOOR PLAN ENLARGED TYP. RESTROOM & EXTERIOR ELEVATIONS

SVA ARCHITECTS
6 HUTTON CENTRE DR, SUITE 1150 SANTA ANA, CA 92707
T 949.809.3380 WWW.SVA-ARCHITECTS.COM

THIS DOCUMENT CONTAINS INFORMATION PROPRIETARY TO SVA ARCHITECTS INC. AND IS FURNISHED IN CONFIDENCE FOR THE LIMITED PURPOSE OF EVALUATION, BIDDING OR REVIEW. THIS DOCUMENT OR ITS CONTENTS MAY NOT BE USED FOR ANY OTHER PURPOSE AND MAY NOT BE REPRODUCED OR DISCLOSED TO OTHERS WITHOUT THE PRIOR WRITTEN CONSENT OF SVA ARCHITECTS INC. ALL RIGHTS RESERVED. © COPYRIGHT 2018.

DOOR SCHEDULE																		
				DOOR			FRAME		DETAILS					HARDWARE				
NUMBER	ROOM NAME	WIDTH	HEIGHT	TYPE	MATERIAL	FINISH	MATERIAL	FINISH	HEAD DETAIL	TRANSOM	JAMB 1	JAMB 2	THRESHOLD	GROUP	PH	FIRE RATING	REMARKS
100	PLUMB-RM	1' - 6"	7' - 0"	F	HM	FPFP	HM	FHFP	2/A62.2		1/A62.2		5A/A62.1	02			
101	UNISEX -1	3' - 0"	7' - 0"	L	HM	FPFP	HM	FHFP	2/A62.2		1/A62.2		5B/A62.1	01			
102	UNISEX -2	3' - 0"	7' - 0"	L	HM	FPFP	HM	FHFP	2/A62.2		1/A62.2		5B/A62.1	01			
103	UNISEX -3	3' - 0"	7' - 0"	L	HM	FPFP	HM	FHFP	2/A62.2		1/A62.2		5B/A62.1	01			
104	UNISEX -4- STAFF	3' - 0"	7' - 0"	L	HM	FPFP	HM	FHFP	2/A62.2		1/A62.2		5B/A62.1	01			
105	CUST/STO.	3' - 0"	7' - 0"	L	HM	FPFP	HM	FHFP	2/A62.2		1/A62.2		5B/A62.1	02			
106	UNISEX -6	3' - 0"	7' - 0"	L	HM	FPFP	HM	FHFP	2/A62.2		1/A62.2		5B/A62.1	01			
107	UNISEX -7	3' - 0"	7' - 0"	L	HM	FPFP	HM	FHFP	2/A62.2		1/A62.2		5B/A62.1	01			
108	UNISEX -8	3' - 0"	7' - 0"	L	HM	FPFP	HM	FHFP	2/A62.2		1/A62.2		5B/A62.1	01			
109	UNISEX -9	3' - 0"	7' - 0"	L	HM	FPFP	HM	FHFP	2/A62.2		1/A62.2		5B/A62.1	01			
110	UNISEX-10	3' - 0"	7' - 0"	L	HM	FHFP	HM	FHFP	2/A62.2		1/A62.2		5A/A62.1	01			

AL	-	ALUMINUM
AC	-	ANODIZED CLEAR
BZ	-	ANODIZED BRONZE
CC	-	CONCEALED CLOSER
CLR	-	CLEAR
FC	-	FLOOR CLOSER
FF	-	FACTORY FINISH
FLFD	-	FUSIBLE LINK FIRE DAMPER
FP	-	FIELD PAINT
FPFP	-	FACTORY PRIMED, FIELD PAINTED
FRA	-	FIRE RATED ASSEMBLY
FS	-	FIELD STAINED
GA	-	GALVANIZED
GL	-	GLASS OR GLAZING
GS	-	GALVANIZED STEEL
HM	-	HOLLOW METAL
KY	-	FLUOROPOLYMER FINISH (SEE SPECS)
LVR	-	LOUVER
MF	-	MILL FINISH
MR	-	MIRRORED GLASS
MAG	-	MAGNETIC HOLD OPEN
P	-	PAINTED (FOR EXISTING FRAMES - PAINT SHALL INCLUDE PREP AND REPAIR OF EXISTING FRAME, TYPICAL)A\
PG	-	PAINT GRADE
PH	-	PANIC HARDWARE
PR	-	PAIR
SCW	-	SOLID CORE WOOD
SG	-	STAIN GRAIN
SMC	-	SURFACE MOUNTED CLOSER
ST	-	STEEL
SS	-	STAINLESS STEEL
TEMP	-	TEMPERED

DOOR NOTES LEGEND

1. LETTER "P" FOLLOWING DOOR TYPE LETTER IN SCHEDULE INDICATES A PAIR OF DOORS. SCHEDULED DIMENSION IS TOTAL FRAME OPENING. BOTH DOOR LEAVES ARE THE SAME SIZE UNLESS OTHERWISE NOTED.

2. LOUVERS IN FIRE-RATED DOOR ASSEMBLIES TO BE FLFD (FUSIBLE LINK FIRE DAMPER), LOUVERS IN EXTERIOR DOORS TO BE VANDAL-PROOF SECURITY TYPE.

3. ALL EXTERIOR DOORS TO HAVE WEATHERSTRIPPING ALL SIDES PER TITLE 24, SECTION T20-1451-1542.

4. EXIT DOORS SERVING 50 OR MORE OCCUPANTS SHALL OPEN IN THE DIRECTION OF EXIT.

5. EVERY EXIT DOOR SHALL BE OPENABLE FROM THE INSIDE WITHOUT THE USE OF A KEY OR ANY SPECIAL KNOWLEDGE OR EFFORT. ANY SPECIAL LOCKING DEVICES SHALL BE OF THE APPROVED TYPE. CBC CHAPTER 33 AND UFC SECTION 12.104(B).

6. DOOR HARDWARE SHALL COMPLY WITH THE FOLLOWING PER CBC 1133B.2.5

1. OPERABLE BY A SIMPLE EFFORT, NOT GRASPING WRIST MOVEMENT (LEVERS, PANIC DEVICES, OR PULLS).
2. 5-LB CLOSURE PRESSURE AT INTERIOR DOORS.
3. 5-LB CLOSURE PRESSURE AT EXTERIOR DOORS.
4. 5-LB CLOSURE PRESSURE AT FIRE DOORS.
5. WHEN FIRE DOORS ARE REQUIRED, THE MAXIMUM EFFORT TO OPERATE THE DOOR MAY BE INCREASED TO THE MINIMUM ALLOWABLE BY THE APPROPRIATE ADMINISTRATIVE AUTHORITY, NOT TO EXCEED 15 POUNDS.

7. DOORS SHALL BE A MINUMUM OF 36" WIDE X 80" HIGH WITH NO SINGLE LEAF EXCEEDING 4'-0" IN WIDTH.

8. BOTTOM 10" OF DOOR TO HAVE SMOOTH UNINTERUPTED SURFACE FOR OPENING BY WHEELCHAIR FOOT REST.

9. CENTER OF HARDWARE TO BE 30" TO 40" ABOVE FLOOR. LATCHING AND LOCKING DOOR TO BE OPERABLE WITH A SINGLE EFFORT BY LEVER OR PUSH-PULL TYPE HARDWARE.

10. PROVIDE DOOR SYMBOLS ON DOORWAYS LEADING TO SANITARY FACILITIES (SEE TOILET ROOM DOOR SIGNAGE). CENTER SYMBOLS ON DOORS AT 60" HEIGHT, AND FINISH IN COLOR CONTRASTING TO THAT OF THE DOOR.

11. THRESHOLDS SHALL BE 1/2" HIGH MAXIMUM WITH A 2:1 DEGREE BEVELED EDGE.

12. THRESHOLD HEIGHT BETWEEN 1/4" AND 1/2" SHALL BE BEVELED AT MAZIMUM 50% SLOPE.

13. ALL EXTERIOR DOOR SHALL HAVE PERIMETER DOOR SOUND SEAL/GASKET.

14. EACH DOOR IN A MEANS OF EGRESS FROM A GROUP A, OR ASSEMBLY AREA NOT CLASSIFIED AS AN ASSEMBLY OCCUPANCY, HAVING AN OCCUPANT LOAD OF 50 OR MORE SHALL NOT BE PROVIDED WITH A LATCH OR LOCK UNLESS IT IS PANIC HARDWARE OR FIRE EXIT HARDWARE. BUILDING CODE 1008.1.10 FIRE CODE 1008.1.10

DOOR GENERAL NOTES

COMMENTS:

1. PROVIDE ELECTRONIC HOLD-OPENS FOR EACH LEAF W/ CONNECTION TO FIRE ALARM.

DOOR LEGEND

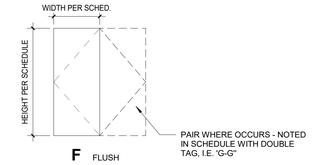

F FLUSH

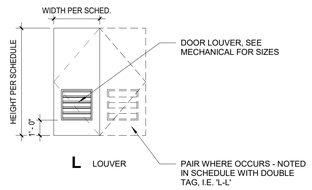

L LOUVER

DOOR COMMENTS LEGEND

FLOORS

T 1 — CERAMIC FLOOR TILE;

E 1 — EXPOSED CONCRETE FLOOR SLAB; CLEANED AND SEALED WITH SATING GLOSS FINISH

BASE

B 1 — GENERAL WALL BASE - CERAMIC TILE DALTILE 4-1/4"X4 1/4" SEMIGLOSS

B 2 — GENERAL WALL BASE - COVED BASE - 4" HIGH RUBER BASE

WALLS

C 1 — RESTROOM WALL TILE T-1 - DALTILE FIELD - WALL SEMI-GLOSS AND MATTED GLAZED, 4"X12" MODERN DIMENSION FIELD COLOR: TBD

P 1 — GENERAL AREA PAINT COLOR P-1 - SHERWIN WILLIAMS - SW75757 HIGH REFLECTIVE WHITE FINISH SEMI-GLOSS

CEILING

P 2 — GENERAL AREA PAINT COLOR SEMIGLOSS

P 3 — GENERAL AREA PAINT COLOR EGGSHELF

ABBREVIATION:

CT CERAMIC TILE
EXP EXPOSED CONC.
GYB GYP. BOARD
MR MOUSTURE RESISTANCE
P-E PAINT EGG SHELL
P-SG PAINT SEMI-GLOSS
RB RUBER BASE

FINISH SCHEDULE							
				WALL FINISH		CEILING	
#	ROOM NAME	FLOOR	BASE	MATERIAL	FINISH	FINISH	COMMENTS
1	UNISEX STUDENT RR	CT	CT	CTB	SG,CT	GYP-MR, P-SG	
2	UNISEX STUDENT RR	CT	CT	CTB	SG,CT	GYP-MR, P-SG	
3	UNISEX STUDENT RR	CT	CT	CTB	SG,CT	GYP-MR, P-SG	
4	UNISEX/STAFF	CT	CT	CTB	SG,CT	GYP-MR, P-SG	
5	CUST/STO.	S2, EXP	RB	GYP	GYP, P-SG	GYP, -P-SG	
6	UNISEX STUDENT RR	CT	CT	CTB	SG,CT	GYP-MR, P-SG	
7	UNISEX STUDENT RR	CT	CT	CTB	SG,CT	GYP-MR, P-SG	
8	UNISEX STUDENT RR	CT	CT	CTB	SG,CT	GYP-MR, P-SG	
9	UNISEX STUDENT RR	CT	CT	CTB	SG,CT	GYP-MR, P-SG	
10	UNISEX STUDENT RR	CT	CT				

INTERIOR FINISH LEGEND

IDENTIFICATION STAMP
DIV. OF THE STATE ARCHITECT
APP: 01-120592 INC:
REVIEWED FOR
SS ☑ FLS ☑ ACS ☑
DATE: 7/11/2023

OWNER: San Rafael City Schools

PROJECT NAME: Venetia Valley - Middle School Restroom Addition

CLIENT ADDRESS: 177 N SAN PEDRO RD., SAN RAFAEL, CA 94903

LICENSED ARCHITECT
ROBERT M. SIMONS
No. C-18301
Jan 31, 2025
STATE OF CALIFORNIA

REVISIONS:

	DESCRIPTION	DATE
1		
2		
3		
4		
5		
6		
7		
8		
9		
10		
11		

PROJECT NO:	2022-40125
DATE ISSUED:	06.29.2023
SCALE:	1/4" = 1'-0"

A52.1

DOOR SCHEDULE & FINISH SCHEDULE

SVA ARCHITECTS
6 HUTTON CENTRE DR, SUITE 1150 SANTA ANA, CA 92707
T 949.809.3380 WWW.SVA-ARCHITECTS.COM

THIS DOCUMENT CONTAINS INFORMATION PROPRIETARY TO SVA ARCHITECTS INC. AND IS FURNISHED IN CONFIDENCE FOR THE LIMITED PURPOSE OF EVALUATION, BIDDING OR REVIEW. THIS DOCUMENT OR ITS CONTENTS MAY NOT BE USED FOR ANY OTHER PURPOSE AND MAY NOT BE REPRODUCED OR DISCLOSED TO OTHERS WITHOUT THE PRIOR WRITTEN CONSENT OF SVA ARCHITECTS INC. ALL RIGHTS RESERVED. © COPYRIGHT 2018.

ASSEMBLY	THERMAL INSULATION			ACOUSTICAL INSULATION		
	THICKNESS	MATERIAL	R-VALUE	THICKNESS	MATERIAL	R-VALUE
ROOF/CEILING	10" 2" MIN	BATT RIGID	R-30 R-10 MIN			
FLOOR/CEILING				3-1/2"	S.A.B.	
DROP CEILING				3-1/2"	S.A.B.	
EXTERIOR WALL	5-1/2" **PLUS** 2" @ BLDG A TYPES 1" @ OTHER BLDGS	BATT RIGID RIGID	R-19 R-5 R-5			
PARTY WALL				3-1/2"	S.A.B.	
CORRIDOR WALL				3-1/2"	S.A.B.	
INTERIOR PLUMBING WALL				3-1/2"	S.A.B.	
INTERIOR SHAFT WALL				2-1/2"	S.A.B.	

WINDOW NOTES:

1. EXTERIOR WINDOWS SHALL HAVE THE FOLLOWING MINIMUM ENERGY PERFORMANCE CHARACTERISTICS:
   U-VALUE: 0.30
   SHGC: 0.20 MAX.

INSULATION NOTES:

1. INSULATION INSTALLED IN A FLOOR/CEILING OR ROOF CEILING ASSEMBLY SHALL BE SUPPORTED BY WIRE STAYS (OR EQUAL) SO THAT THE INSULATION DOES NOT MAKE CONTACT WITH THE FACE MEMBRANE OF THE ASSEMBLY (GYPSUM WALLBOARD).
2. MATERIAL NOTED AS S.A.B. REFERS TO SOUND ATTENTUATION BATT.
3. INSULATION SCHEDULED FOR COMMON WALL UNIT TO UNIT SHALL BE INSTALLED IN EACH SIDE OF THE WALL ASSEMBLY.
4. ALL INTERIOR WALL CAVITY SPACES TO RECEIVE INSULATION.
5. REFER TO MECHANICAL PLANS FOR DETAILED INFORMATION REGARDING ENERGY CODE REQUIREMENTS.

ASSEMBLY SCHEDULE

1. PARTY WALL AND DIVISION WALL FRAMING REQUIREMENTS:

A. STUDS SHALL NOT OVERRIDE PLATES OF PARTY OR DIVISION WALLS. KNOT HOLES, WARPED LUMBER, SPLINTERED WOOD, SPLICES, CHIPS AND SAWCUTS SHALL NOT BE PERMITTED AT VERTICAL OR HORIZONTAL PARTY WALL CONNECTIONS.
B. FRAMING AT BUILT-UP CORNERS AND JOISTS TO WALL CONNECTIONS ALONG PARTY WALLS SHALL FIT TIGHTLY WITHOUT AIR GAPS. SPECIAL CARE SHALL BE TAKEN SO THAT DRY WALL NAILER BLOCKING MEETS THIS CONDITION BETWEEN JOISTS.
C. CONCRETE POUR MATERIAL SHALL NOT FLOW ONTO PART WALL SOLE PLATES. CONCRETE SHALL NOT BE POURED ONTO OR INTO PARTY WALL SEPARATION CAVITIES BETWEEN PLATES.
D. REFER TO INSULATION SCHEDULE (A-61.11) FOR ACOUSTIC INSULATION REQUIREMENTS. ALL WALL INSULATION SHALL BE SNUGLY FITTED AND/OR STAPLED BETWEEN STUDS.
E. GYPSUM WALLBOARD SHALL CONTINUE TO THE ROOF LINE ON ONE SIDE OF THE WALL TO AVOID FLANKING OF SOUND THROUGH THE ATTIC SPACE. GYPSUM WALLBOARD SHALL BE INSTALLED TO MAINTAIN A 1/4" GAP AT ALL PARTY OR DIVISION WALL PERIMETERS AND FILL THE GAP WITH ACOUSTICAL CAULK.
F. WHERE TWO LAYERS OF GYPSUM WALLBOARD ARE REQUIRED ON ONE SIDE OF A COMMON WALL, THE JOINTS BETWEEN THE SECOND LAYER OF WALLBOARD MUST BE STAGGERED WITH RESPECT TO THE JOINTS OF THE FIRST LAYER, I.E. THE JOINTS MUST NOT OVERLAP.
G. GYPSUM WALLBOARD AT PARTY AND DIVISION WALLS SHALL BE INSTALLED TO MAINTAIN A 1/4" GAP AT PERIMETERS. FILL GAP WITH ACOUSTICAL SEALANT.

2. FLOOR/CEILING REQUIREMENTS:

A. PROVIDE 1-1/2 INCH THICK 2000 PSI GYSPUM CONCRETE FLOOR UNDERLAYMENT OVER ENKASONIC UNDERLAYMENT OVER STRUCTURAL SHEATHING @ ALL APARTMENTS ABOVE GROUND FLOOR.
B. REFER TO INSULATION SCHEDULE ON THIS SHEET FOR ACOUSTIC INSULATION REQUIREMETNS. ALL FLOOR/CEILING INSULATION SHALL BE SNUGLY FITTED AND/OR STAPLED BETWEEN JOISTS.
C. GYPSUM WALLBOARD AT FLOOR CEILING ASSEMBLIES SHALL BE INSTALLED TO MAINTAIN A 1/4" GAP AT PERIMETERS. FILL GAP WITH ACOUSTICAL SEALANT.
D. SEALANT FOR ALL FLOOR/CEILING ASEMBLIES SHALL BE INSTALLED IN STRICT CONFORMANCE WITH MANUFACTURER'S SPECIFICATIONS.
E. RESILIENT CHANNELS SHALL BE INSTALLED PER CONFORMANCE WITH THE MANUFACTURER, ASTM STANDARDS AND THE GYPSUM CONSTRUCTION HANDBOOK.
F. WALLS SHALL BE INSTALLED BEFORE THE RESILIENT CHANNELS TO ENSURE THAT THE CHANELS REMAIN TO THE OUTSIDE OF THE WALL TO ALLOW THE CEILING TO FLOAT OR MOVE VERTICALLY WITHOUT HINDRANCE.

3. SEALANT:

A. THE INTENT OF THESE RECOMMENDATIONS IS TO ENSURE THAT AN AIR TIGHT COMMON PARTITION CONSTRUCTION IS MAINTAINED. A 1 SQ. IN. HOLE, CRACK OR GAP IN A 100 SQ. FT. WALL WILL REDUCE THE STC RATING BY 10 POINTS AS COMPARED OT HTE SAME WALL WITH AN AIR TIGHT CONSTRUCTION. THUS, THE IMPORTANCE OF PERFORMING CAULKING AND SEALING COMPLETELY AND PRECISELY CANNOT BE OVEREMPHASIZED.
B. ACOUSTICAL SEALANT SHALL BE NON-SKINNING, NON-HARDENING, FLEXIBLE SEALANT SPECIFICALLY DESIGNAD FOED SEALING GYPSUM WALLBOARD (ASTMC 919). SEALANT SHALL BE CAPABLE OF SPANNING 1/2" WIDE BY 3/8" DEEP GAPS. ACCEPTABLE PRODUCTS INCLUDE: TREMO OR USG SEALANT (OR APPROVED EQUAL). SEALANT SHALL BE INSTALLED IN STRICT CONFORMANCE WITH MANUFACTURER'S SPECIFICATIONS.
C. IF MULTIPLE LAYERS OF WALLBOARD ARE APPLIED TO A WALL SURFACE THE SEALANT MUST BE INSTALLEED FOR LAST LAYER (EA. SIDE OF WALL).
D. AT ALL PENETRATIONS IN COMMON WALLS OR COMMON CEILINGS FOR SUCH ITEMS AS ELECTRICAL BOXES, LIGHT FIXTURES, PLUMBING LINES, ETC., LEAVE A 3/16" TO 1/4" GAP IN THE WALLBOARD AROUND THE FIXTURE AND THEN FILL THE GAP WITH ACOUSTICAL SEALANT. IN ADDITION, THE BACKS OF ALL ELECTRICAL BOXES, TELEPHONE BOXES, MEDICINE CABINETS, AND OTHER THIN WALLED ITEMS INSET INTO A COMMON WALL MUST BE COVERED WITH AN AIRTIGHT GYPSUM WALLBOARD HOUSING OR WITH HEAVY MASTIC MATERIAL SUCH AS LOWRY PADS.

4. RESILIENT CHANNEL ASSEMBLIES:

A. RESILIENT CHANNELS SHALL BE DIETRICH RC DELUXE FOR WALLS, SUBSTITUTOINS ARE NOT ALLOWED.
NOTE: THERE SHALL BE NO CONTACT BETWEN THE SHORT (NON-FASTEN) LEG OF THE CHANNEL AND THE JOIST OR STUDS.
B. ATTACHING CHANNELS: ORIENT CHANNELS PERPENDICULAR TO FRAMING AND WITH FLANGES FACING IN ONLY ONE DIRECTION. ATTACH CHANNELS AT SPACINGS AND WITH FASTENERS DENOTED IN THE FIRE TEST ASSEMBLY. USE THE PRE-DRILLED MOUNTING HOLES IN THE CHANNELS FOR ATTACHMENT TO THE STUDS OR JOISTS. LOCATE CHANNELS A MAXIMUM OF 3" AND HOLD BACK ENDS 1/2" FROM INTERSECTING SURFACES. PROVIDE SUFFICIENT FRAMING SO CHANNELS ARE NOT CANTILEVERED GREATER THAN 6". CHANNELS MUST NOT CROSS EACH OTHER UNDER ANY CIRCUMSTANCE. CHANNELS MAY ONLY BE OVERLAPPED AT SPLICES. SPLIE CHANNELS ONLY AT FRAMING WITH A MAXIMUM OVERLAP OF 1.5" AND SCREW ATTACH THROUGH BOTH FLANGES.
C. ATTACHING GYPSUM WALLBOARD: APPLY GYPSUM WALLBOARD AT A MAXIMUM PRACTICAL LENGTH WITH THE LONG EDGE PARALLEL WITH AND CENTERED ON CHANNELS. FASTEN GYPSUM WALLBOARD AT SPACINGS AND WITH FASTENERS DENOTED IN THE FIRE TEST ASSEMBLY. NAILING RESILIENT CHANNELS ISS NOT PERMITTED. FASTENERS SHALL ONLY BE ATTACHED TO THE CHANNELS AND NOT THE FRAMING. INSTALL GYPSUM WALLBOARD TO ALLOW FOR 1/4" GAP FROM INTERSECTING SURFACES. WHEN CONSTRUCTION OF MULTIPLE LAYERS OF GYPSUM WALLBOARD IS INDICATED, APPLY THE FACE LAYER WITH THE LONG EDGE JOINTS OFFSET BY 24" AND THE SHORT EDGE JOINTS OFFSET BY 48" FROM THE BASE LAYER. ADDITIONALLY, OFFSET THE FACE LAYER SCREW PATTERN 6" FROM THE BASE LAYER SCREWS ALONG THE CHANNELS.
D. SEALANT: SEAL ALL PERIMETER JOINTS OF RESILIENT ASSEMBLIES AIRTIGHT WITH APPROVED ACOUSTICAL SEALANT.
E. BASEBOARD AND TRIM: DO NOT RIGIDLY ATTACH BASEBOARD OR OTHER FINISH TRIM TO UNDERLYING FRAMING THROUGH RESILIENT ASSEMBLIES. SCREW ATTACH BASEBOARD OR OTHER FINISH TRIM TO RESILIENT CHANNELS. ADHERING FINISH TRIM IS AN ACCEPTABLE ALTERNATIVE.

5. PLUMBING:

A. IN ORDER TO MINIMIZE OR ELIMINATE FLOW NOISE AT ALL WATER, WASTE, DRAIN AND REFRIGERANT PIPING, CONTRACTOR IS TO PROVIDE VIBRATION ISOLATION:
I) SUPPLY PIPING 1" DIAMETER OR SMALLER SHALL BE INSTALLED WITH ISOLATOR HOLDERS, AND GUIDES.
II) SUPPLY AND WASTE PIPING MORE THAN 1" IN DIAMETER SHALL BE INSTALLED WITH PILE ISOLATORS
II) PLASTER R THIN-WALLED COPER WASTE AND DRAIN PIPING SHALL BE COMPLETELY WRAPPED USING LOWRY ACOUSTICAL PIPIE WRPA AS MANUFACTURED BY HARRY A. LOWRY COMPANY (OR APPROVED EQUAL)
IV) REFRIGERANT LINES SHALL BE ISOLATED BY INSULATING THE ENTIRE LENGTH OF THE LINE WITH A MINIMUM OF 1/2" "ARMAFLEX" (OR APPROVED EQUAL). PLACE CLAMPS OVER THE INSULATION WHEN ATTTACHING TO THE STRUCTURE SO THAT THERE IS NO DIRECT CONTACT BETWEEN THE PIPING AND THE STRUCTURE. MAINTAIN A 2" CLEANCE BETWEEN THE REFRIGERANT LINES AND THE GYPSUM WALLBOARD.
B. PIPING THROUGH BEDROOOMS, LIVING ROOMS AND DINING ROOMS SHALL BE INSTALLED TO MAINTAIN A 2" MINIMUM CLEARRANCE FROM GYPSUM WALLBOARD. SUPPLY PIPING ROUTED DIRECTLY ACROSS PARTY WALLS SHALL NOT BE PERMITTED. IN NO CASE SHALL THE PLUMBING PIPING OF ONE DWELLING UNIT BE CLOSER THAN 1" FROM ANOTHER DWELLING UNIT.
C. AT A MINIMUM PROVIDE PIPING SUPPORT PER PLUMBING CODE (SEE PLUMBING DRAWINGS). THE PLUMBING PIPING, PIPE CONNECTIONS, PIPE HANGERS, OR VALVES, SHALL NOT MAKE CONTACT WITH ANY PART OF THE SURROUNDING STRUCTURE. JOISTS, STUDS, WALLBOARD OR OTHER PIPES, PIPING AND/OR DUCTING WITHIN FLOOR/CEILING ASSEMBLIES SHALL BE SUPPORTED FROM THE JOISTS AND COMPLETELY ISOLATED FROM THE CEILING.
D. IN OTHERWISE UN-INSULATED STUD BAY OR JOIST CAVITY CONTAINING PIPING INSTALL A MINIMUM OF 3-1/2" ACOUSTIC BATT INSULATION OR OTHER SOUND ABSORPTIVE MATERIAL.
E. WATER PRESSURE CONTROL: GENERAL CONTRACTOR TO CONFIRM THT WATER SUPPLY PIPING INSTALLED WILL MAINTAIN A MAXIMUM WATER FLOW RATE OF 4 FEET PER SECOND IN 1/2" AND 3/4" DIAMETER BRANCH LINES. FOR LARER LINES THE MAXIMUM FLOW RATE SHALL BE 6 FEET PER SECOND. MAINTAIN A MAXIMUM OF 50 PSI WATER PRESSURE AT PLUMBING FIXTURES, CONSISTEN WITH ADEQUATE FLOW RATES.
F. ACOUSTICAL (FIRE STOPPING) SEALANT SHALL BE INSTALLED AT ALL PIPE PENETRATIONS AS DESCRIBED ABOVE.

6. MECHANICAL:

A. PROVIDE NEOPRENE PADS WHERE ROOFTOP EQUIPMENT IS OVER RESIDENTIAL DWELLING UNITS. WHERE ROOFTOP EQUIPMENT IS PLACED OVER RESIDENTIAL DWELLING LIVING AND SLEEPING AREAS, AND WHENEVER OVER COMMON AREAS, MASON INDUSTRIES, INC. TYPE SLR SPRING MOUNTS TO BE PROVIDED. USE SLACK CABLE RESTRAINT OR SEPARATE SEISMIC SNUBBERS TO LIMIT HORIZONTAL MOVEMENT. MECHANICAL CONTRACTOR SHALL CONSULT AN INDEPENDENT STRUCURAL ENGINEER FOR APPROPRIATE SEISMIC RESTRAINT SYSTEM DESIGN. ROOFTOP EQUIPMENT SHALL BE INSTALLED ON CONCRETE HOUSEKEEPING PADS.
B. INSTALL SUSPENDED MEHCANICAL UNITS SUCH AS FAN/COIL OR IN-LINE FANS ON A MINIMUM OF 1" STATIC DEFLECTION SPRING HANGERS SUCH AS MASON TYPE 30N (OR APPROVED EQUAL). DO NOT ALLOW DIRECT CONTACT BETWEEN THE MECHANICAL UNIT AND THE STRUCTURE OR OTHER ADJACENT UTILITIES. MAINTAIN A MINIMUM OF 2" CLEARANCE BETWEEN THE REFRIGERANT LINES AND GYPSUM WALLBOARD SURFACES.
C. AT A MINIMUM, PROVIDE BATHROOM EXHAUST FANS WITH A NOISE RATING LOWER THAN 2.0 SONES. NOTE THAT FAN SOUND RATINGS TYPICALLY ASSUME 10 FEET OF STRAIGHT DUCT ATTACHED OT THE FAN. WHERE CONDITIONS VARY FROM THIS ASSUMPTION, PROVIDE FANS WITH LOWER SOUND RATINGS. MANY BATHROOM FANS ARE AVAILABLE WITH SOUND RATINGS BELOW 1.0 SONE. BATHROOM FAN HOUSING WHICH ARE MOUNTED WITHIN A SEPARATION ASSEMBLY SHALL BE BOXED IN WITH 5/8" GYPSUM BOARD, SEALED AIR TIGHT AND SURROUNDED WITHFIBERGLAS OR EQUIVALENT SOUND ABSORPTIVE MATERIAL.
D. PROVIDE A MINIMUM OF 3 FEET OF ACOUSTICALLY LINED DUCT BETWEEN THE FAN/COIL UNIT AND ANY DIFFUSER. DIFFUSERS AND GRILLS SHALL PERFORM A BACKGROUND NOISE CRITERION OF 3 POINTS BELOW NC 30 (I.E. NC25).

7. ELECTRICAL:

A. CONVENIENCE OUTLETS IN OPPOSITE FACES OF PARTY OR DIVISION WALLS SHALL BE INSULATED AS FOLLOWS:
I) ELECTRICAL BOXES (SWITCHES, OUTLETS, WALL FIXTURES, ETC. IN OPPOSITE FACES OF PARTY OR DIVISION WALLS SHALL BE SEPARATED HORIZONTALLY BY NOT LESS THAN 24 INCHES (I.E. IN DIFFERENT STUD BAYS). IN THE EVENT IT IS NOT PRACTICAL OR POSSIBLE TO PLACE OUTLETS IN DIFFERENT STUD BAYS, THEY SHALL BE SEPARATED FROM EACH OTHER AS MUCH AS POSSIBLE AND IN NO CASE SHALL THERE BE PHYSICAL CONTACT BETWEEN THE TWO ELECTRICAL BOXES. HOWEVER, THE FOLLOWING ITEMS ARE APPLICABLE IN ALL CASES:
II) MASTIC SEALER (LOWRY PADS OR APPROVED EQUAL) SHALL BE WRAPPED AROUND BACK SIDES, TOP AND BOTTOM OF ALL ELECTRICAL BOXES IN PARTY WALLS.
III) ELECTRICAL BOXES SHALL BE BACKED BY R-11 FIBERGLASS AS NEEDED TO COMPLETELY FILL THE STUD BAY.
IV) KNOCKOUT PLATES ON ELECTRICAL BOXES IN PARTY OR DIVISION WALLS SHALL NOT BE BENT OR REMOVED WHERE CONDUITS ARE NOT CONNECTED TO THE BOX.
B. RECESSED LIGHT FIXURES IN CEILINGS SHALL HAVE NO VENTILATION HOLES. JUNCTION BOXES IN CEILINGS SHALL BE WRAPPED AROUDN BACK AND SIDES WITH LOWRY PADS (OR APPROVED EQUAL) AND SEALED AIRTIGHT WITH ACOUSTICAL SEALANT.

8. KITCHENS, BATHROOMS AND LAUNDRY ROOMS:

A. THE PARTY WALL BEHIND A TUB AND/OR SHOWER ASSEMBLY SHALL BE CONSTRUCTED CONSISTENT WITH THE PARTY WALL SPECIFICATIONS. GYPSUM WALLBOARD SHALL BE INSTALLED BEHIND ALL TUBS AND/OR SHOWERS WHICH ARE ADJACENT TO PARTY WALLS.
B. VOIDS BETWEEN THE WALL, FLOOR AND TUB/SHOWER UNITS SHALLBE COMLETELY FILLED WITH A FIBERGLASS INSULATION OR EQUIVALENT SOUND ABSORPTIVE MATERIAL.
C. KITCHEN CAIBNETS SHALL BE PLACED ON 1/8" THICK NEOPRENE RUBBER PADS AND THE PADS SHALL BE PLACED BETWEEN THE CABINET AND WALL WHERE ATTACHED TO THE PARTY WALL.
D. KITCHEN DISHWASHERS AND DISPOSALS SHALL BE ISOLATD FROM THE FRAME BY RESILIENT MOUNTS. FLEXIBLE HOSE COUPLERS FOR INLET AND OUTLET WATER CONNECTIONS ON THE DISHWASHER SHALL BE INSTALLED SO THAT NO RIGID CONNECTION EXISTS.

9. FLOOR COVERINGS:

A. IF A RESILIENT VINYL FLOOR COVERING IS USED, A DURABLE BRAND OF VINYL MEETING RESILIENT FLOOR COVERING COMMITTEE F6 AT THE AMERICAN SOCIETY FOR TESTING AND MATERIALS (ASTM) REQUIREMENTS SHALL BE PROVIDED.
B. REFER TO FINISH SCHEULE FOR SPECIFICATION OF ACOUSTIC UNDERLYAMENTS AT TILE FLOOR ASSEMBLIES.

ACOUSTICAL CONTROL REQUIREMENTS

REQUIRED LOCATIONS:

1. CONCEALED SPACES OF WALLS AND PARTITIONS, INCLUDING FURRED SPACES, AT 10'-0" INTERVALS BOTH HORIZONTAL AND VERTICAL.

2. AT INTERSECTIONS BETWEEN VERTICAL AND HORIZONTAL.

3. AT CONCEALED SPACES BETWEEEN STAIR STRINGERS AT TOP AND BOTTOM OF STAIR RUN.

4. IN OPENING AROUND PIPES, DUCTS, CHIMNEYS, FIREPLACES AT CEILINGS AND FLOORS.

CONSTRUCTION:

1. 2" NOMINAL LUMBER, OR (2) LAYERS OF 1" LUMBER WITH BROKEN LAPS, OR (1) LAYER OF 3/4" STRUCTURAL PANEL WITH JOINTS BACKED BY 3/4" STRUCTURAL PANEL.

2. GYPSUM BOARD, CEMENT FIBER BOARD.

3. BLANKETS OF MINERAL FIBER (IF TESTED FOR USE). NO LOOSE FILL INSULATION.

FIRE BLOCKING NOTES

GENERAL:

1. ALL FRAMING MEMBERS SHALL BE SO ARRANGED AND SPACED AS TO PERMIT INSTALLATION OF PIPES, CONDUITS, CONTROLS AND DUCTWORK WITH A MINIMUM OF CUTTING. SHAFT WALLS SHALL BE PROVIDED WITH NECESSARY FRAMES, BRACING AND SEALANT AROUND THE OPENING.

2. OFFSET STUDS WHERE REQUIRED SO THAT FINISH WALL SURFACE WILL BE FLUSH. IF STRUCTURAL PANELS ARE REQUIRED ON A WALL PLANE, THE ENTIRE WALL PLANE SHALL BE FURRED OR FINISHED FLUSH.

3. CONTRACTOR SHALL PROVIDE AND INSTALL ALL STIFFENERS, BRACING, BACK-UP PLATES, AND SUPPORTING BRACKETS REQUIRED FOR THE INSTALLATION OF ALL CASEWORK, STAIR RAILINGS, TOILET ACCESSORIES, PARTITION, AND ALL WALL-MOUNTED OR SUSPENDED MECHANICAL, ELECTRICAL OR MISCELLANEOUS EQUIPMENT.

4. AT A MINIMUM FIREBLOCKING SHALL BE PROVIDED THROUGHOUT AS REQUIRED PER CURRENT BUILDING CODES. SEE NOTES THIS SHEET.

5. AT A MINIMUM FIRE DAMPERS SHALL BE PROVIDED WHERE AIR DUCTS PENETRATE FIRE RATED ASSEMBLIES IN COMPLIANCE WITH CURRENT BUILDING CODES. SEE NOTES THIS SHEET.

6. PLASTIC PIPE PENETRATION IN ACOUSTICAL PARTY FLOOR-CEILING OR WALL ASSEMBLIES ARE PROHIBITED (UNLESS ALLOWED BY LISTED ASSEMBLY). PLASTIC PIPES AND PLASTIC BOXES (EXCEPT UL FIRE RATED BOXES) SHALL NOT PENETRATE FIRE RATED WALLS, FLOORS, CEILINGS. NEC 300-21. SEE SHEET A-61.1 FOR FIRE STOPPING REQUIREMENTS.

7. FURNISH AND INSTALL ALL ACCESS DOORS, FIRE DAMPERS, ETC. IN CEILING AND WALL CONSTRUCTION LOCATED AS REQUIRED BY INSTALLATION OF MECHANICAL, PLUMBING AND ELECTRICAL WORK AND AS APPROVED BY THE ARCHITECT. PROVIDE REQUIRED FIRE RATED ASSEMBLIES IN FIRE RATED WALLS AND CEILINGS.

8. CONTACT BETWEEN DISSIMILAR METALS SHALL BE PROTECTED AT ALL LOCATIONS W/ UNDERLAYMENT - BITUMINOUS PAINT, NEOPRENE WASHERS OR ANOTHER NON-CONDUCTING MATERIAL.

9. PROVIDE INSULATION PER SCHEDULE AND CONFORMING TO ASTM C 665-98 TYPE III - BLANKETS W/ A REFLECTIVE VAPOR-RETARDED ON PRINCIPAL SIDE. FIRE RESISTANCE RATED WHERE EXPOSED IN THE EXTERIOR WALL OR AT THE CEILING PLENUM.

10. ROOFING SYSTEM SHALL BEAR UL LISTING AS A CLASS "A" SYSTEM. ALL MANUFACTURED MATERIALS USED SHALL BEAR THE APPROPRIATE UL LABEL.

11. CONTRACTOR SHALL PROVIDE ALL CONCRETE HOUSEKEEPING PADS FOR MECHANICAL AND ELECTRICAL EQUIPMENT, AS REQUIRED.

12. ALL CONSTRUCTION SHALL COMPLY WITH ACOUSTICAL REQUIREMENTS NOTED ON A-61.11 AND ELSEWHERE IN THE DRAWINGS AND SPECIFICATIONS. UNIT TO UNIT WALLS AND FLOOR/CEILIN ASSEMBLIES SHALL MEET A MINIMUM STC AND IIC SOUND RATING OF 50. REFERENCE INDIVIDUAL WALL AND FLOOR CEILING ASSEMBLIES NOTED IN THESE DRAWINGS.

13. ALL ROOF PIPE PENETRATIONS TO BE ROUND.

CONSTRUCTION ASSEMBLIES - GENERAL

IDENTIFICATION STAMP
DIV. OF THE STATE ARCHITECT
APP: 01-120592 INC:
REVIEWED FOR
SS ☑ FLS ☑ ACS ☑
DATE: 7/11/2023

OWNER: San Rafael City Schools

PROJECT NAME: Venetia Valley - Middle School Restroom Addition

CLIENT ADDRESS: 177 N SAN PEDRO RD., SAN RAFAEL, CA 94903

LICENSED ARCHITECT
ROBERT M. SIMONE
No. C-18301
Jan 31, 2025
STATE OF CALIFORNIA

REVISIONS:

	DESCRIPTION	DATE
1		
2		
3		
4		
5		
6		
7		
8		
9		
10		

PROJECT NO:	2022-40125
DATE ISSUED:	06.29.2023
SCALE:	As indicated

A60.0

CONSTRUCTION ASSEMBLY NOTES AND REQUIREMENTS

SVA ARCHITECTS
6 HUTTON CENTRE DR, SUITE 1150 SANTA ANA, CA 92707
T 949.809.3380 WWW.SVA-ARCHITECTS.COM

THIS DOCUMENT CONTAINS INFORMATION PROPRIETARY TO SVA ARCHITECTS INC. AND IS FURNISHED IN CONFIDENCE FOR THE LIMITED PURPOSE OF EVALUATION, BIDDING OR REVIEW. THIS DOCUMENT OR ITS CONTENTS MAY NOT BE USED FOR ANY OTHER PURPOSE AND MAY NOT BE REPRODUCED OR DISCLOSED TO OTHERS WITHOUT THE PRIOR WRITTEN CONSENT OF SVA ARCHITECTS INC. ALL RIGHTS RESERVED. © COPYRIGHT 2018.

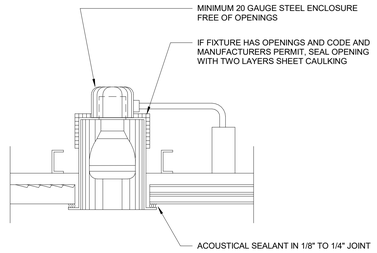

NOTE - AT FRAMED CEILING, LIGHT FIXTURE SHALL ATTACH TO BOTH ADJACENT CEILING JOISTS W/ MIN. (2) #10 WOOD SCREW EACH JOIST

NON-RATED PLASTER OR DRYWALL CEILING

HEAVY GAUGE LIGHT FIXTURE IN — 3" = 1'-0" — 8

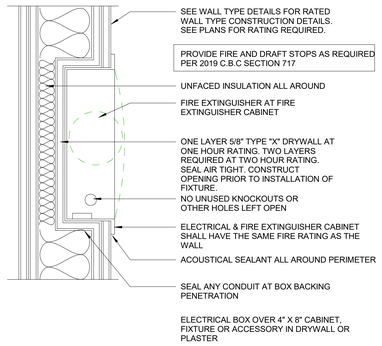

IN RATED WALL CONSTRUCTION

ELECTRICAL OR FIXTURE CABINET — 3" = 1'-0" — 7

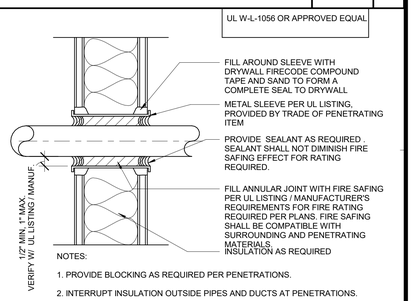

NOTES:

1. PROVIDE BLOCKING AS REQUIRED PER PENETRATIONS.

2. INTERRUPT INSULATION OUTSIDE PIPES AND DUCTS AT PENETRATIONS.

3. AS FAR AS POSSIBLE, SEPARATE PIPES, DUCTS, AND CONDUITS SO THEY CAN BE TREATED INDIVIDUALLY AS ABOVE.

4. 1- HOUR WALL GRAPHICALLY SHOWN, 2-HOUR SIMILAR BUT WITH WALL TYPE PER UL 2 HR ASSEMBLIES

ALL RESILIENTLY-SUPPORTED PIPES, DUCTS OR CONDUITS AND RIGIDLY-SUPPORTED PIPES, DUCTS OR CONDUITS OVER 2 INCHES IN DIAMETER THRU DRYWALL WALLS

THROUGH PENETRATION ACOUSTICAL — 3" = 1'-0" — 3

NOTE: DETAIL IS TO SHOW INSULATION JACKET ONLY. REFER TO PLUMBING DRAWINGS FOR SUPPORT DETAILS.

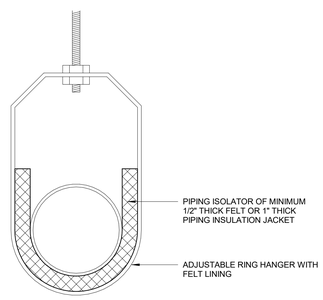

SUSPENDED PIPE HANGER — 3" = 1'-0" — 10

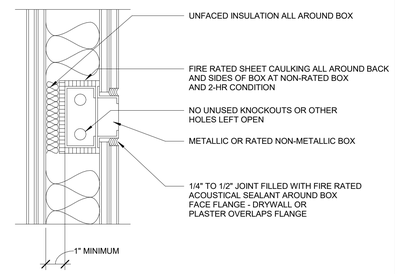

IN DRYWALL OR PLASTER WALL

ELECTRICAL BOX UP TO 16 SQ. IN. — 3" = 1'-0" — 6

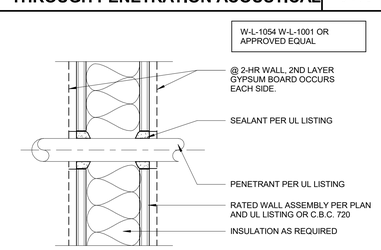

NOTES:

1. PROVIDE BLOCKING AS REQUIRED ABOVE PENETRATIONS.

2. INTERRUPT INSULATION OUTSIDE PIPES AND DUCT AT PENETRATIONS.

3. AS FAR AS POSSIBLE, SEPARATE PIPES, DUCTS, AND CONDUITS SO THEY CAN BE TREATED INDIVIDUALLY AS ABOVE.

4. 1-HOUR WALL GRAPHICALLY SHOWN, 2-HOUR SIMILAR BUT WITH 2 HR UL LISTED WALL ASSEMBLY WALL

RIGIDLY-SUPPORTED PIPE OR CONDUIT 2 INCHES OR LESS IN DIAMETER THRU DRYWALL OR PLASTER WALLS, FLOORS SIMILAR

THROUGH PENETRATION (2" MAX.) — 3" = 1'-0" — 2

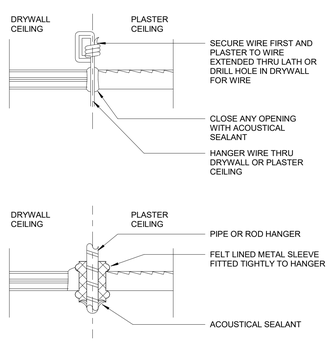

THRU CEILING FINISH

NON-RATED HANGER PENETRATION — 3" = 1'-0" — 9

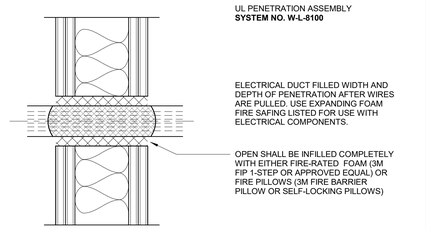

NOTES:

1. PROVIDE BLOCKING OR LINTEL AS REQUIRED ABOVE PENETRATIONS.

2. INTERRUPT INSULATION OUTSIDE PIPES AND DUCT AT PENETRATIONS.

3. DO NOT GROUP DUCT LIKE PIPES IN DETAIL 6.

ELECTRICAL DUCT THRU DRYWALL OR PLASTER, CONCRETE, FLOOR SIMILAR.

THRU GYPSUM BOARD

ELECTRICAL DUCT PENETRATION — 3" = 1'-0" — 5

FIRESTOPPING NOTES:

1. MATERIALS USED IN THE FIRE SAFETY SYSTEMS ARE TO BE INSTALLED IN ACCORDANCE WITH THE MANUFACTURER'S INSTRUCTIONS PROVIDED WITH THE MATERIALS AND SHALL BE UL LISTED AS FIRE-RATED PRODUCTS.

2. THE F & T RATINGS OF THROUGH PENETRATION FIRE STOPS SHALL NOT BE LESS THAN THE FIRE RESISTANCE OF THE ASSEMBLY PENETRATED AND SHALL BE SUITABLE FOR THE METHOD OF, AND MATERIALS SURROUNDING, THE PENETRATION AND PENETRATING ITEM.

3. SEE CBC SECTION 713 FOR ADDITIONAL THROUGH PENETRATION AND MEMBRANE PENETRATION REQUIREMENTS.

4. FIRE SAFETY SYSTEMS ARE SPECIFIC FOR EACH VARYING CONDITION OF A FIRE-RATED WALL OR FLOOR ASSEMBLY, THE PENETRATING ITEM(S), AND THE MATERIALS SELECTED TO PREVENT THE SPREAD OF FIRE THROUGH THE PENETRATION. THE SAFING MATERIALS DESIGNATED FOR USE IN FIRE ASSEMBLIES ARE NOT PROVIDED SPECIFIC FIRE RATINGS. SAFETY MATERIALS SHALL BE SELECTED PER EACH MANUFACTURERS TECHNICAL PRODUCT LITERATURE FOR EACH CONDITION ENCOUNTERED AND DOCUMENTED IN SHOP DRAWINGS FOR REVIEW BY THE MANUFACTURER, CONTRACTOR, DSA AND ARCHITECT.

5. REVIEW FULL PLAN SET FOR THE CONSTRUCTION ASSEMBLIES TO BE PENETRATED.

6. PROVIDE SUBMITTALS PER SPECIFICATIONS WITH DSA APPROVALS FOR SPECIFIC PRODUCTS SUBMITTED.

7. ALL PENETRATING ITEMS PENETRATING FIRE-RATED WALL OR FLOOR ASSEMBLIES ARE REQUIRED TO BE METAL. THE METAL PENETRATING ITEM MUST EXTEND 6" BEYOND EACH SIDE OF THE ASSEMBLY BEFORE THE PENETRATING ITEM CAN CHANGE TO BE NONMETALLIC, SEE FIGURE ONE BELOW. IF THE PENETRATING ITEM PENETRATES ONLY ONE SIDE OF A FIRE ASSEMBLY, THE PENETRATING ITEM MUST EXTEND 6" BEYOND THE EXTERIOR OF THE ASSEMBLY, AND 6" BEYOND THE PENETRATION WITHIN THE ASSEMBLY BEFORE THE PENETRATING ITEM CAN CHANGE TO BE NONMETALLIC. SEE FIGURE TWO BELOW. ANY PROPOSED PENETRATION OF A FIRE-RATED ASSEMBLY BY A NONMETALLIC PENETRATING MUST BE SUBMITTED FOR APPROVAL PER THE REQUIREMENTS OF GENERAL NOTE 4 ABOVE.

8. CONTRACTOR TO COMPARE PIPE MATERIAL WITH SOILS REPORT TO VERIFY COMPATIBILITY.

FIRE ASSEMBLY GENERAL NOTES — 3" = 1'-0" — 1

IDENTIFICATION STAMP
DIV. OF THE STATE ARCHITECT
APP: 01-120592 INC:
REVIEWED FOR
SS ☑ FLS ☑ ACS ☑
DATE: 7/11/2023

OWNER: San Rafael City Schools

PROJECT NAME: Venetia Valley - Middle School Restroom Addition

CLIENT ADDRESS: 177 N SAN PEDRO RD., SAN RAFAEL, CA 94903

LICENSED ARCHITECT
ROBERT M. SIMONE
No. C-18301
Jan 31, 2025
STATE OF CALIFORNIA

REVISIONS:

	DESCRIPTION	DATE
1		
2		
3		
4		
5		
6		
7		
8		
9		
10		

PROJECT NO:	2022-40125
DATE ISSUED:	06.29.2023
SCALE:	3" = 1'-0"

A60.1

PENETRATION ASSEMBLIES

SVA ARCHITECTS
2030 FRANKLIN ST, SUITE 210 OAKLAND, CA 94612
T 510.267.3180 WWW.SVA-ARCHITECTS.COM

THIS DOCUMENT CONTAINS INFORMATION PROPRIETARY TO SVA ARCHITECTS INC. AND IS FURNISHED IN CONFIDENCE FOR THE LIMITED PURPOSE OF EVALUATION, BIDDING OR REVIEW. THIS DOCUMENT OR ITS CONTENTS MAY NOT BE USED FOR ANY OTHER PURPOSE AND MAY NOT BE REPRODUCED OR DISCLOSED TO OTHERS WITHOUT THE PRIOR WRITTEN CONSENT OF SVA ARCHITECTS INC. ALL RIGHTS RESERVED, © COPYRIGHT 2018.

W1 EXTERIOR WALL - PLASTER

WALL TYPE	STUD SIZE	STUD SPACING	OVERALL WALL THK	DETAIL	COMMENTS
W1.6	2X6	16" O.C.	6 3/4"	1 / -	
W1.6B	2X6	16" O.C.	7 1/2"	1 / -	TILE ON ONE SIDE

W3 INTERIOR PARTITION

WALL TYPE	STUD SIZE	STUD SPACING	OVERALL WALL THK	DETAIL	COMMENTS
W3.4	2X4	16" O.C.	4 3/4"	3 / -	
W3.6	2X6	16" O.C.	6 3/4"	3 / -	

W6 TILE WALL

WALL TYPE	STUD SIZE	STUD SPACING	OVERALL WALL THK	DETAIL	COMMENTS
W6.4	2X4	16" O.C.	5 1/4"	6 / -	
W6.4B	2X4	16" O.C.	5 3/4"	6 / -	TILE BOTH SIDES
W6.6	2X6	16" O.C.	7 1/4"	6 / -	TILE ONE SIDES
W6.6B	2X6	16" O.C.	7 3/4"	6 / -	TILE BOTH SIDES

W7 PLUMBING WALL

WALL TYPE	STUD SIZE	STUD SPACING	OVERALL WALL THK	DETAIL	COMMENTS
W7.6	2X6	16" O.C.	1' - 6 3/4"	7 / -	

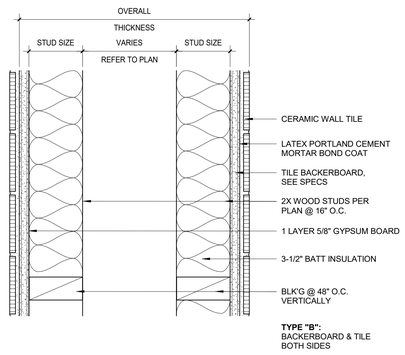

PLUMBING WALL (W7) 3" = 1'-0" **7**

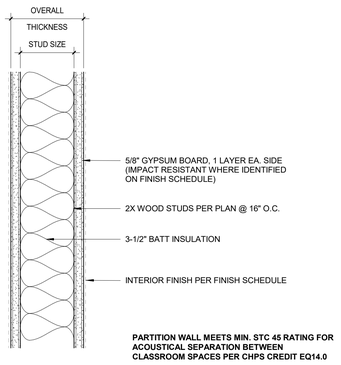

INTERIOR PARTION (W3) 3" = 1'-0" **3**

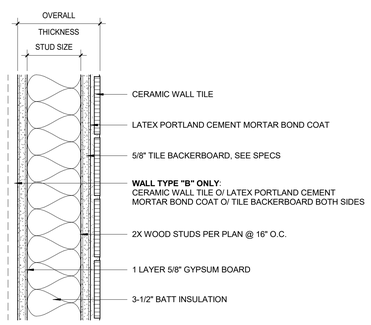

TILE WALL (W6) 3" = 1'-0" **6**

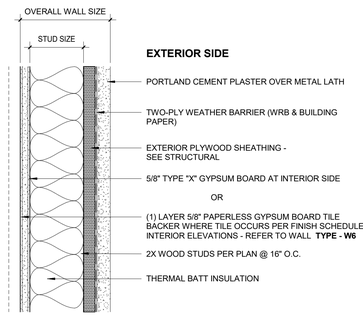

EXTERIOR WALL - PLASTER (W1) 3" = 1'-0" **1**

WALL TYPE SCHEDULE

1. PROVIDE BLOCKING AT MID-HEIGHT OF ALL WALLS, SEE STRUCTURAL DETAILS FOR MORE INFORMATION. WHERE EXTERIOR WALLS ARE SHEATED ON ONE SIDE ONLY, PROVIDE CONTINUOUS BLOCKING @ 48" O.C. VERTICALLY FOR ENTIRE WALL HEIGHT.

2. ALL WALLS SHALL BE FULL HEIGHT UNLESS NOTED OTHERWISE.

3. REFER TO SPECIFICATION DIVISIONS 22, 23 AND 26 FOR HVAC, PLUMBING, AND ELECTRICAL PENETRATION OF WALLS.

4. AT TILED WALLS, STOP TILE AND BACKER BOARD AT CEILING, PROVIDE 5/8" TYPE "X" GYP. BD. FOR REMAINING HEIGHT OF WALL.

5. PROVIDE THERMAL BATT INSULATION AT ALL EXTERIOR WALLS - PROVIDE ACOUSTICAL INSULATION AT ALL INTERIOR WALLS.

6. REFER TO FLOOR PLAN FOR LOCATION OF WALL TYPES.

7. AT TILED WALLS, STOP TILE AND BACKER BOARD AS SHOWN ON INTERIOR ELEVATIONS HEIGHTS, PROVIDE 5/8" TYPE "X" GYP. BD. FOR REMAINING HEIGHT OF WALL.

WALL TYPE GENERAL NOTES

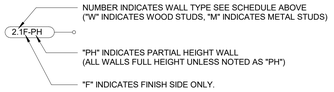

WALL TYPE SYMBOL LEGEND

IDENTIFICATION STAMP
DIV. OF THE STATE ARCHITECT
APP: 01-120592 INC:
REVIEWED FOR
SS ☑ FLS ☑ ACS ☑
DATE: 7/11/2023

OWNER: San Rafael City Schools

PROJECT NAME: Venetia Valley - Middle School Restroom Addition

CLIENT ADDRESS: 177 N SAN PEDRO RD., SAN RAFAEL, CA 94903

LICENSED ARCHITECT
ROBERT M. SIMONE
No. C-18301
Jan 31, 2025
STATE OF CALIFORNIA

REVISIONS:

	DESCRIPTION	DATE
1		
2		
3		
4		
5		
6		
7		
8		
9		
10		

PROJECT NO:	2022-40125
DATE ISSUED:	06.29.2023
SCALE:	As indicated

A61.1

WALL TYPES - WOOD STUD

SVA ARCHITECTS
6 HUTTON CENTRE DR, SUITE 1150 SANTA ANA, CA 92707
T 949.809.3380 WWW.SVA-ARCHITECTS.COM

THIS DOCUMENT CONTAINS INFORMATION PROPRIETARY TO SVA ARCHITECTS INC. AND IS FURNISHED IN CONFIDENCE FOR THE LIMITED PURPOSE OF EVALUATION, BIDDING OR REVIEW. THIS DOCUMENT OR ITS CONTENTS MAY NOT BE USED FOR ANY OTHER PURPOSE AND MAY NOT BE REPRODUCED OR DISCLOSED TO OTHERS WITHOUT THE PRIOR WRITTEN CONSENT OF SVA ARCHITECTS INC. ALL RIGHTS RESERVED. © COPYRIGHT 2018.

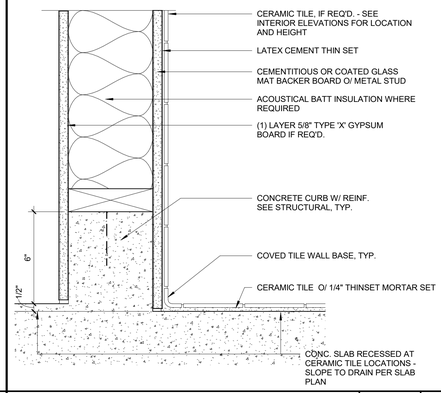

WALL TYPE 2 - INTERIOR WALL @ TILE 3" = 1'-0" **7**

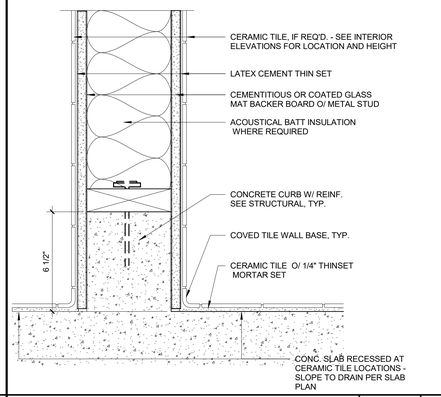

WALL TYPE 3 - INTERIOR TILE BOTH SIDE 3" = 1'-0" **6**

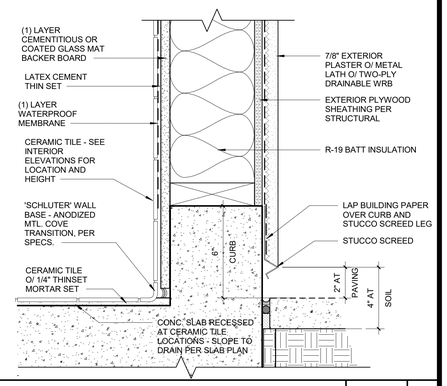

EXTERIOR STUCCO @ TILE INTERIOR 3" = 1'-0" **2**

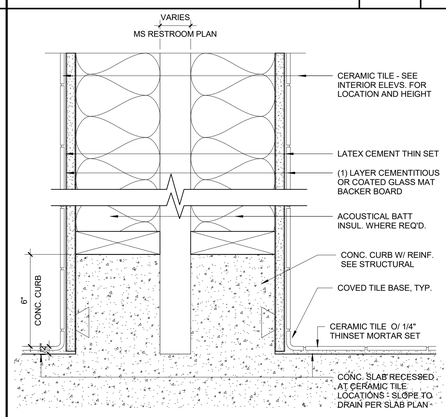

PLUMBING WALL - DOUBLE WALL 3" = 1'-0" **5**

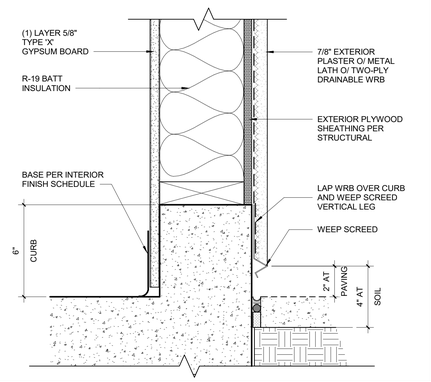

WALL @ EXTERIOR STUCCO 3" = 1'-0" **1**

IDENTIFICATION STAMP
DIV. OF THE STATE ARCHITECT
APP: 01-120592 INC:
REVIEWED FOR
SS ☑ FLS ☑ ACS ☑
DATE: 7/11/2023

OWNER: San Rafael City Schools

PROJECT NAME: Venetia Valley - Middle School Restroom Addition

PROJECT ADDRESS: 177 N SAN PEDRO RD., SAN RAFAEL, CA 94903

LICENSED ARCHITECT
ROBERT M. SIMONE
No. C-18301
Jan 31, 2025
STATE OF CALIFORNIA

REVISIONS:

	DESCRIPTION	DATE
1		
2		
3		
4		
5		
6		
7		
8		
9		
10		

PROJECT NO:	2022-40125
DATE ISSUED:	06.29.2023
SCALE:	3" = 1'-0"

A61.2

WALL DETAILS

SVA ARCHITECTS
2030 FRANKLIN ST. SUITE #210 OAKLAND, CA 94612
T 510.267.3180 WWW.SVA-ARCHITECTS.COM

THIS DOCUMENT CONTAINS INFORMATION PROPRIETARY TO SVA ARCHITECTS INC. AND IS FURNISHED IN CONFIDENCE FOR THE LIMITED PURPOSE OF EVALUATION, BIDDING OR REVIEW. THIS DOCUMENT OR ITS CONTENTS MAY NOT BE USED FOR ANY OTHER PURPOSE AND MAY NOT BE REPRODUCED OR DISCLOSED TO OTHERS WITHOUT THE PRIOR WRITTEN CONSENT OF SVA ARCHITECTS INC. ALL RIGHTS RESERVED, © COPYRIGHT 2018.

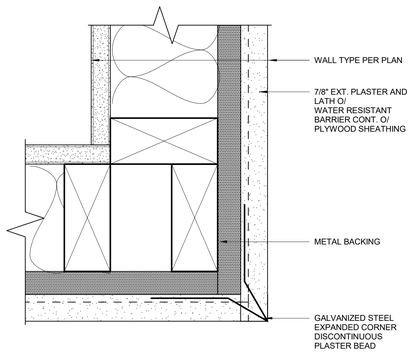

PLASTER OUTSIDE CORNER 6" = 1'-0" **7**

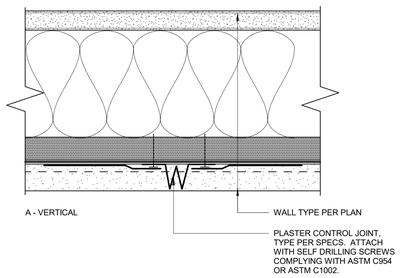

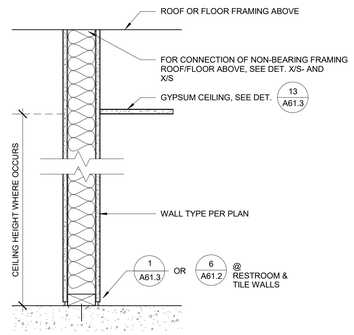

FULL HEIGHT FRAMING 1 1/2" = 1'-0" **2**

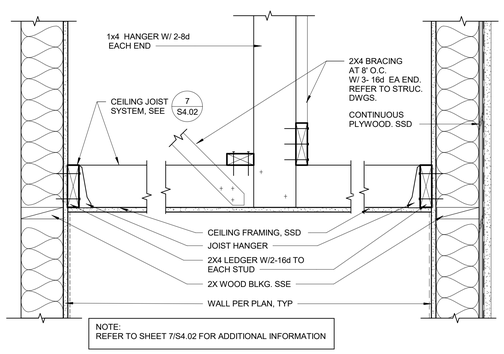

CEILING FRAMING JOIST 1 1/2" = 1'-0" **13**

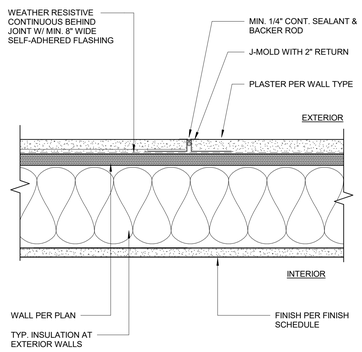

PLASTER VERTICAL JOINT 3" = 1'-0" **9**

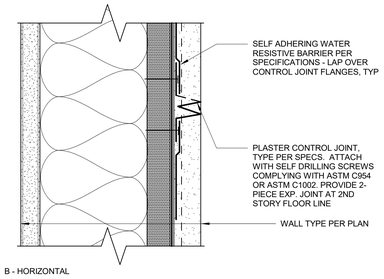

SEE ELEVATIONS FOR LOCATIONS

PLASTER CONTROL JOINTS 6" = 1'-0" **5**

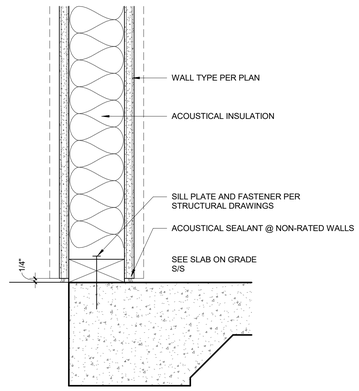

TYP. SILL PLATE CONNECTION 3" = 1'-0" **1**

IDENTIFICATION STAMP
DIV. OF THE STATE ARCHITECT
APP: 01-120592 INC:
REVIEWED FOR
SS ☑ FLS ☑ ACS ☑
DATE: 7/11/2023

OWNER: San Rafael City Schools

PROJECT NAME: Venetia Valley - Middle School Restroom Addition

CLIENT ADDRESS: 177 N SAN PEDRO RD., SAN RAFAEL, CA 94903

LICENSED ARCHITECT
ROBERT M. SIMONE
No. C-18301
Jan 31, 2025
STATE OF CALIFORNIA

REVISIONS:

	DESCRIPTION	DATE
1		
2		
3		
4		
5		
6		
7		
8		
9		
10		

PROJECT NO:	2022-40125
DATE ISSUED:	06.29.2023
SCALE:	As indicated

A61.3

WALL DETAILS & CEILING DETAILS

SVA ARCHITECTS
2030 FRANKLIN ST, SUITE 210 OAKLAND, CA 94612
T 510.267.3180 WWW.SVA-ARCHITECTS.COM

THIS DOCUMENT CONTAINS INFORMATION PROPRIETARY TO SVA ARCHITECTS INC. AND IS FURNISHED IN CONFIDENCE FOR THE LIMITED PURPOSE OF EVALUATION, BIDDING OR REVIEW. THIS DOCUMENT OR ITS CONTENTS MAY NOT BE USED FOR ANY OTHER PURPOSE AND MAY NOT BE REPRODUCED OR DISCLOSED TO OTHERS WITHOUT THE PRIOR WRITTEN CONSENT OF SVA ARCHITECTS INC. ALL RIGHTS RESERVED. © COPYRIGHT 2018.

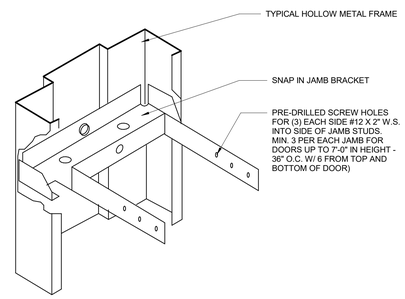

H.M DOOR FRAME JAMB ANCHORS 1 1/2" = 1'-0" **3**

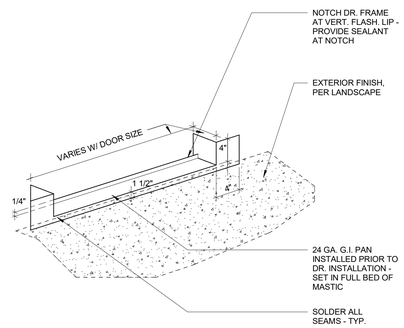

EXTERIOR DOOR THRESHOLD FLASHING 3" = 1'-0" **6**

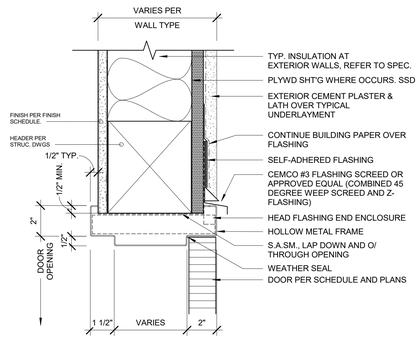

HOLLOW METAL HEAD @ EXTERIOR1 3" = 1'-0" **2**

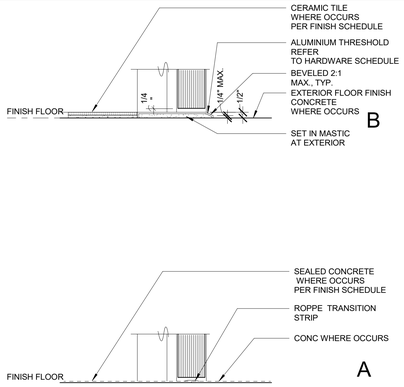

THRESHOLD DETAILS 3" = 1'-0" **5**

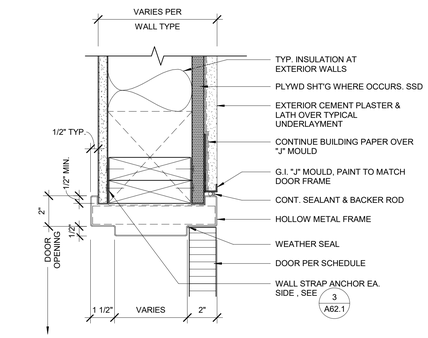

HOLLOW METAL JAMB @ EXTERIOR1 3" = 1'-0"

IDENTIFICATION STAMP
DIV. OF THE STATE ARCHITECT
APP: 01-120592 INC:
REVIEWED FOR
SS ☑ FLS ☑ ACS ☑
DATE: 7/11/2023

OWNER: San Rafael City Schools

PROJECT NAME: Venetia Valley - Middle School Restroom Addition

CLIENT ADDRESS: 177 N SAN PEDRO RD., SAN RAFAEL, CA 94903

LICENSED ARCHITECT
ROBERT M. SIMONE
No. C-18301
Jan 31, 2025
STATE OF CALIFORNIA

REVISIONS:

	DESCRIPTION	DATE
1		
2		
3		
4		
5		
6		
7		
8		
9		
10		

PROJECT NO:	2022-40125
DATE ISSUED:	06.29.2023
SCALE:	As indicated

A62.1

DOORS DETAILS

SVA ARCHITECTS

2030 FRANKLIN ST, SUITE 210 OAKLAND, CA 94612
T 510.267.3180 WWW.SVA-ARCHITECTS.COM

THIS DOCUMENT CONTAINS INFORMATION PROPRIETARY TO SVA ARCHITECTS INC. AND IS FURNISHED IN CONFIDENCE FOR THE LIMITED PURPOSE OF EVALUATION, BIDDING OR REVIEW. THIS DOCUMENT OR ITS CONTENTS MAY IT BE USED FOR ANY OTHER PURPOSE AND MAY NOT BE REPRODUCED OR DISCLOSED TO OTHERS WITHOUT THE PRIOR WRITTEN CONSENT OF SVA ARCHITECTS INC. ALL RIGHTS RESERVED, © COPYRIGHT 2018.

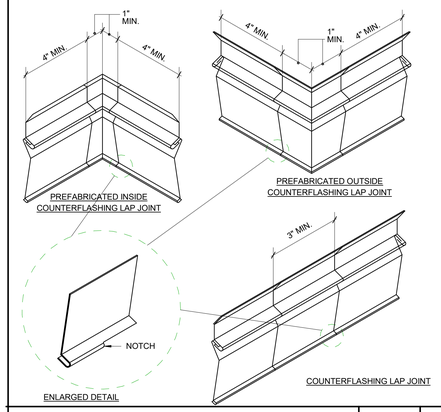

REGLET FLASHING | 1 1/2" = 1'-0" | 16

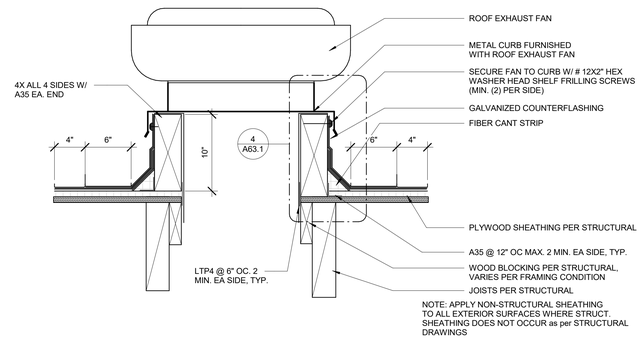

DUCT PENETRATION AT ROOF | 1 1/2" = 1'-0" | 8

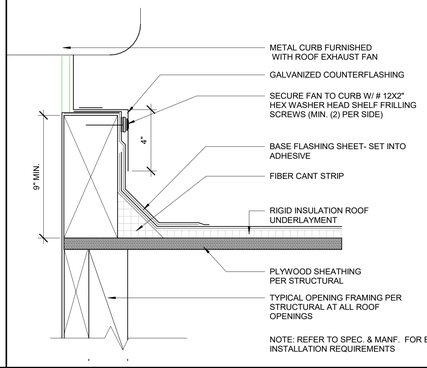

EXHAUST FAN FLASHING | 3" = 1'-0" | 4

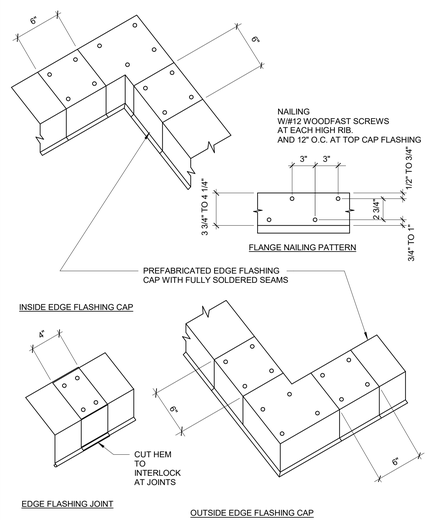

NOTES:
ROOF CEMENT SHALL BE INSTALLED BETWEEN THE ENDS AT ALL JOINTS, SIX INCHES EACH SIDE OF JOINT. EACH JOINT SHALL BE NAILED WITH A MINIMUM OF FOUR NAILS, TWO ON SIDE OF THE JOINT. ALL JOINTS AND MITERS SHALL BE OVERLAPPED A MINIMUM OF FOUR INCHES.

EDGE FLASHING | 1 1/2" = 1'-0" | 19

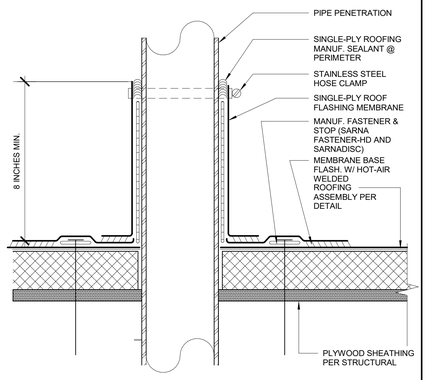

PLUMBING PIPE PENETRATION AT ROOF | 3" = 1'-0" | 9

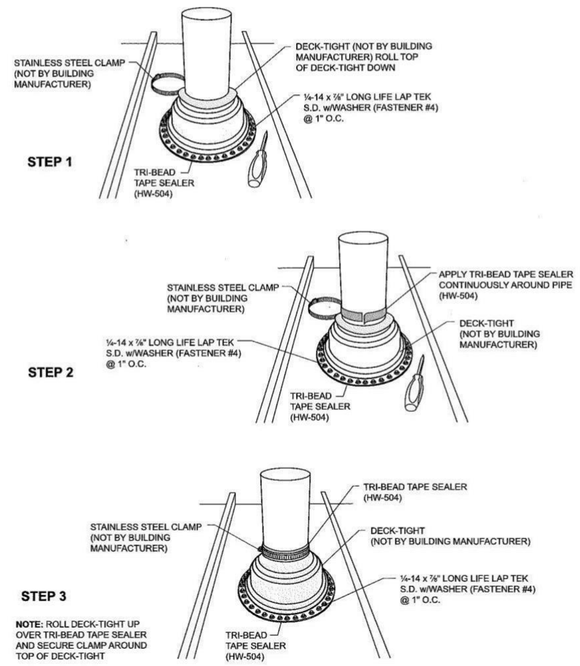

PIPE PENETRATION @ METAL ROOF | N.T.S | 1

IDENTIFICATION STAMP
DIV. OF THE STATE ARCHITECT
APP: 01-120592 INC:
REVIEWED FOR
SS ☑ FLS ☑ ACS ☑
DATE: 7/11/2023

OWNER: San Rafael City Schools

PROJECT NAME: Venetia Valley - Middle School Restroom Addition

CLIENT ADDRESS: 177 N SAN PEDRO RD., SAN RAFAEL, CA 94903

LICENSED ARCHITECT
ROBERT M. SIMONS
No. C-18301
Jan 31, 2025
STATE OF CALIFORNIA

REVISIONS:

	DESCRIPTION	DATE
1		
2		
3		
4		
5		
6		
7		
8		
9		
10		

PROJECT NO:	2022-40125
DATE ISSUED:	06.29.2023
SCALE:	As indicated

A63.1

ROOF DETAILS

SVA ARCHITECTS
2030 FRANKLIN ST, SUITE 210 OAKLAND, CA 94612
T 510.267.3180 WWW.SVA-ARCHITECTS.COM

THIS DOCUMENT CONTAINS INFORMATION PROPRIETARY TO SVA ARCHITECTS INC. AND IS FURNISHED IN CONFIDENCE FOR THE LIMITED PURPOSE OF EVALUATION, BIDDING OR REVIEW. THIS DOCUMENT OR ITS CONTENTS MAY NOT BE USED FOR ANY OTHER PURPOSE AND MAY NOT BE REPRODUCED OR DISCLOSED TO OTHERS WITHOUT THE PRIOR WRITTEN CONSENT OF SVA ARCHITECTS INC. ALL RIGHTS RESERVED. © COPYRIGHT 2018.

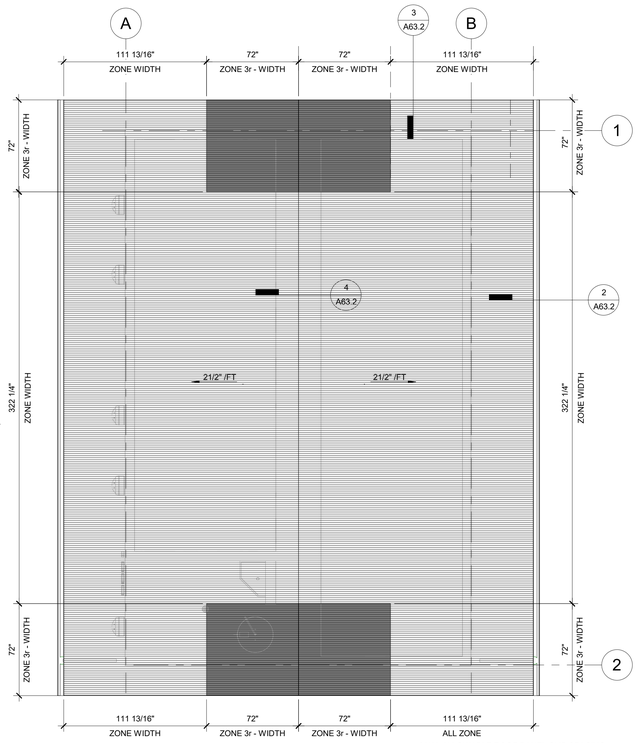

PANEL CLIP SPACING
1. MAXIMUM ALLOWABLE ROOF PANEL CLIP SPACING PER ROOF DIAGRAM AND LEGEND.
2. ROOF PANEL CLIPS MAY BE INSTALLED CLOSER TOGETHER THAN THE ALLOWABLE O.C. MAX IF JOB SITE CONDITIONS REQUIRE.
3. PANEL CLIPS MUST "NOT" EXCEED THE MANFACTURER'S PROVIDED O.C. MAXIMUMS.
4. FOR ROOF PANEL LENGTH REFERENCE MANUFACTURE AND SUBSTRATE LENGTH MUST BE FIELD VERIFICATION

MAX. ALLOWABLE ROOF PANEL CLIP SPACING.

LEGEND	ZONES	CLIP SPACING ft/in
	1, 2e, 2n,4,5, 2r, 3e,	3'- 6" (perimeter, field of roof)
	3r	3'- 0" (high winds corners)

Note: For additional info. refer to Struc. Roof Pressure Calc Report & Evaluation Report No. 686 (included in the set)

ROOF PANEL CLIP SPACING 1/4" = 1'-0" **15**

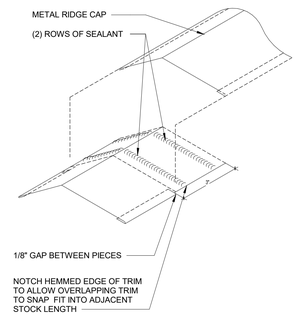

ROOF RIDGE LAP PANEL 3" = 1'-0" **5**

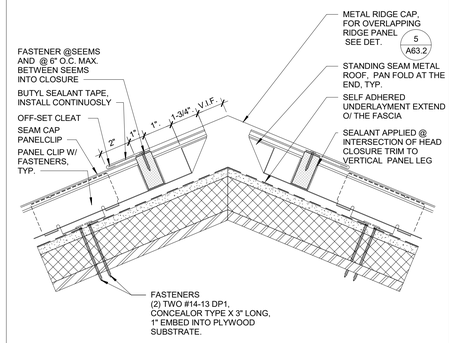

ROOF RIDGE DETAIL 3" = 1'-0" **4**

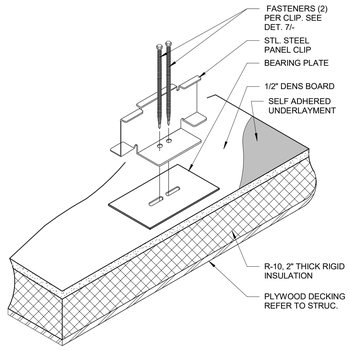

CLIP BEARING PLATE 1/2" = 1'-0" **8A**

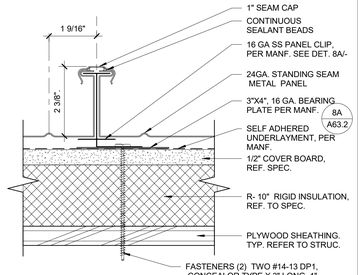

NOTE: SELF ADHERED UNDERLAYMENT APPLY MIN. OF (1) LAYER OF AQUABLOCK 50 OVER ENTIRE ROOF INCLUDING AROUND PERIMETERS AND PENETRATIONS.RAKE, EAVE, RIDGE, HEAD, JAMB & HIP, PER MANF. OR REFER TO SPEC.

ROOF PANEL CLIP DETAIL 6" = 1'-0" **8**

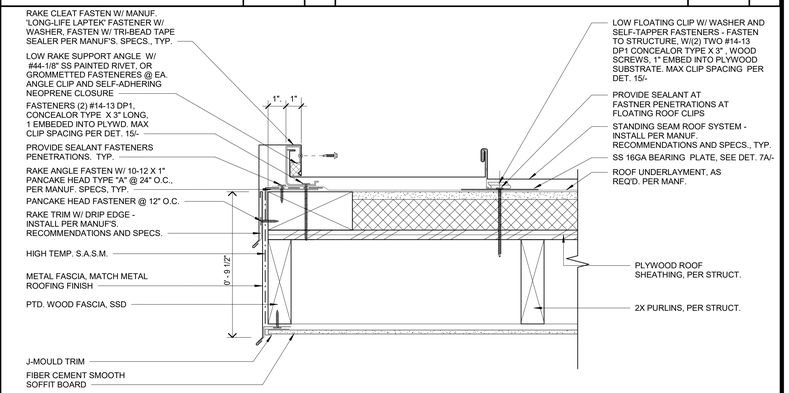

BOX RAKE 3" = 1'-0" **3**

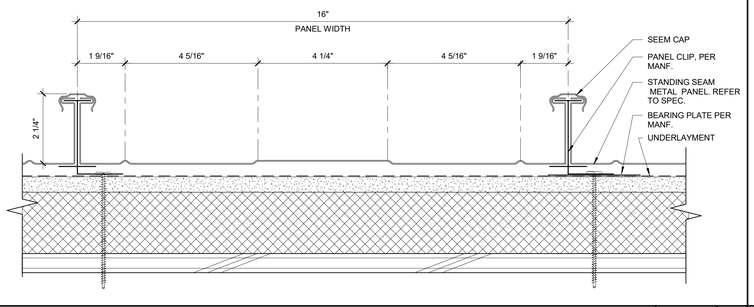

ROOF PANEL PROFILE 6" = 1'-0" **7**

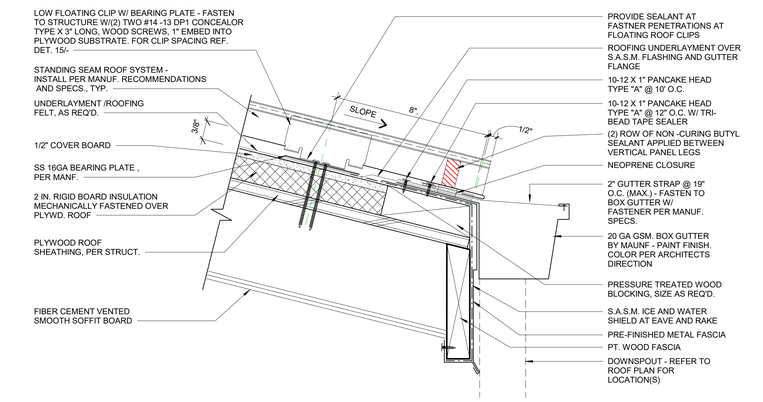

LOW EAVE W/ BOX GUTTER (PLUMB CUT) 3" = 1'-0" **2**

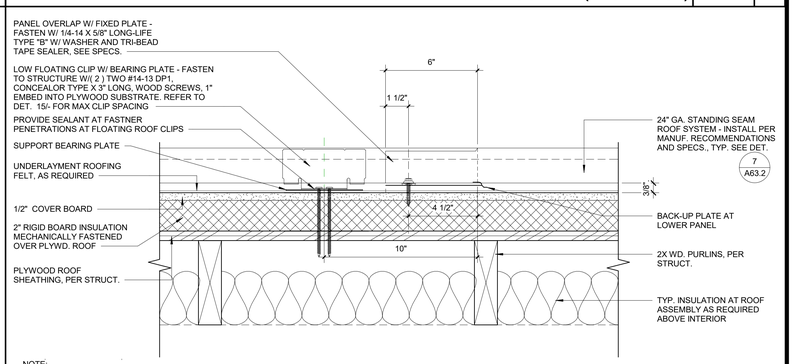

NOTE:

1. PER CBC 1507. 4 & TABLE 1507.1.(3) MAX. BASIC DESIGN WIND PEED V < 140 MPH UNDERLAYMENT ATTACHMENT IS PER MANF. INSTALLATION INSTRUCTION , REFER TO STRUC, CALS REPORT, DET. 13/-
2. MATERIALS , INSTALLATION, FINISHES SHALL MEET EVALUATION REPORT 686 - WWW.IMETCO.COM.
3.FOR METAL TYPE, SEAM PROFILE , FINISH COLOR AND ADDITIONAL INFORMATION REFER TO SPECS.

TYPICAL METAL ROOF ASSEMBLY 3" = 1'-0" **1**

IDENTIFICATION STAMP
DIV. OF THE STATE ARCHITECT
APP: 01-120592 INC:
REVIEWED FOR
SS ☑ FLS ☑ ACS ☑
DATE: 7/11/2023

A#01-119750

OWNER: San Rafael City Schools

PROJECT NAME: Venetia Valley - Middle School Restroom Addition

PROJECT ADDRESS: 177 N SAN PEDRO RD., SAN RAFAEL, CA 94903

LICENSED ARCHITECT
ROBERT M. SIMONS
No. C-18301
Jan 31, 2025
STATE OF CALIFORNIA

REVISIONS:

	DESCRIPTION	DATE
1		
2		
3		
4		
5		
6		
7		
8		
9		
10		

PROJECT NO:	2022-40125
DATE ISSUED:	06.29.2023
SCALE:	As indicated

A63.2

ROOF DETAILS

SVA ARCHITECTS
2030 FRANKLIN ST., SUITE 210 OAKLAND, CA 94612
T.510.267.3180 WWW.SVA-ARCHITECTS.COM

THIS DOCUMENT CONTAINS INFORMATION PROPRIETARY TO SVA ARCHITECTS INC. AND IS FURNISHED IN CONFIDENCE FOR THE LIMITED PURPOSE OF EVALUATING BIDDING OR QUOTATION OR OBTAINING CONSENT TO THE CONTENTS HEREOF. NO OTHER USE OR ANY OTHER PURPOSE, AND MAY NOT BE REPRODUCED OR DISCLOSED TO OTHERS WITHOUT THE PRIOR WRITTEN CONSENT OF SVA ARCHITECTS INC. ALL RIGHTS RESERVED. © COPYRIGHT 2020.

VENETIA VALLEY ELEMENTARY SCHOOL RESTROOM ADDITION

SAN RAFAEL, CA

ABBREVIATIONS

A.B.	Anchor Bolt
ACI	American Concrete Institute
A.D.	Area Drain
ADDL	Additional
ADJ	Adjacent
A.F.F.	Above Finish Floor
AISC	American Institute of Steel Construction
ALT	Alternate
APPROX	Approximately
ARCH	Architect or Architectural
ASPH	Asphalt
ASTM	American Society for Testing and Materials
A.C.	Asphaltic Concrete, Air Condition
BAL	Balance
B.L.	Bottom Lower
BLDG	Building
BLK	Block
BLKG	Blocking
BM	Beam
B.O.	Bottom of
BOT	Bottom
B.P.	Break Point
BRD	Board
BRG	Bearing
BRKT	Bracket
BTWN	Between
B.U.	Bottom Upper
C	Channel
CBC	California Building Code
C.I.P.	Cast In Place
C.J.	Construction or Control Joint
CLG	Ceiling
CL	Center Line
CLR	Clear
CMU	Concrete Masonry Unit
COL	Column
CONC	Concrete
CONN	Connection
CONSTR	Construction
CONTIN	Continuous
C.J.P.	Complete Joint Penetration
CTR	Center
CTRD	Centered
CTRSNK	Countersink
d	Penny weight
DBL	Double
DEPR	Depression
D.F.	Douglas Fir
DIA or	Diameter
DIAG	Diagonal
DIM	Dimension
DL	Dead Load
DN	Down
do	Ditto
D.W.F.	Deformed Wire Fabric
DWG	Drawing
(E)	Existing
EA	Each
E.F.	Each Face
E.J.	Expansion Joint
EL	Elevation
ELEC	Electrical
ELEV	Elevator
EMBED	Embedment
E.N.	Edge Nail
ENCL	Enclosure
ENGR	Engineer
E.O.	Edge of
E.O. MAS	Edge of Masonry
E.O. PL	Edge of Plate
E.O. SLAB	Edge of Slab
EQ	Equal
EQPT	Equipment
E.W.	Each Way
EXP	Expansion
EXT	Exterior
F.D.	Floor Drain
FDN	Foundation
F.F.	Finish Floor
FIN	Finish
FLR	Floor
F.O.	Face of
F.O. CONC	Face of Concrete
F.O. MAS	Face of Masonry
F.O. STUD	Face of Stud
FRMG	Framing
F.S.	Far Side
FT	Foot or Feet
FTG	Footing
GA	Gage
GALV	Galvanized
G.B.	Grade Beam
GLB	Glued Laminated Beam
GLC	Glued Laminated Column
GR	Grade
GYP	Gypsum
HDR	Header
HGR	Hanger
HK	Hook
HORIZ	Horizontal
H.P.	High Point
H.R.	Hard Rock
HSS	Hollow Structural Section
HT	Height
I	Moment of Inertia
I.D.	Inside Diameter
I.F.	Inside Face
INFO	Information
INSUL	Insulation
INT	Interior
JST	Joist
JT	Joint
KIPS	1000 Pounds
KSF	KIPS Per Square Foot
L	Angle
LBS	Pounds
LL	Live Load
LLH	Long Leg Horizontal
LLV	Long Leg Vertical
LONGIT	Longitudinal
L.P.	Low Point
L.S.	Low Shrinkage
LSL	Laminated Strand Lumber
LT	Light
LVL	Laminated Veneer Lumber
LTWT	Light Weight
MACH	Machine
MAS	Masonry
MATL	Material
MAX	Maximum
M.B.	Machine Bolt
MC	Miscellaneous Channel
M.D.	Mid-depth
MECH	Mechanical
M.F.	Moment Frame
MFR	Manufacturer
MIN	Minimum
MISC	Miscellaneous
MTL	Metal
(N)	New
N.A.	Not Applicable
N.I.C.	Not In Contract
NO.	Number
N.P.	No Profile
N.S.	Near Side
N.T.S.	Not To Scale
o.c.	On Center
O.D.	Outside Diameter
O.F.	Outside Face
O.H.	Opposite Hand
OPNG	Opening
OPP.	Opposite
OSB	Oriented Strand Board
O.W.S.G.	Open Web Steel Girder
O.W.S.J.	Open Web Steel Joist
PAR	Parapet
PC	Piece
P/C	Precast
PCF	Pound per Cubic Foot
P.D.F.	Powder Driven Fastener
P.D.P.	Powder Driven Pin
PL	Property Line or Plate
PLF	Pounds per Linear Foot
PLY	Plywood
PLYWD	Plywood
P.J.P.	Partial Joint Penetration
PSF	Pounds per Square Foot
PSI	Pounds per Square Inch
PSL	Parallel Strand Lumber
P/T	Post-Tensioned
P.T.	Pressure Treated
P.T.D.F.	Pressure Treated Douglas Fir
R	Radius
R.D.	Roof Drain
RDWD	Redwood
REF	Reference
REINF	Reinforcing
REQD	Required
REV	Revision
RF	Roof
RM	Room
R.O.	Rough Opening
S	Section Modulus
S.A.D.	See Architectural Drawings
S.C.D.	See Civil Drawings
SCHED	Schedule
S.E.D.	See Electrical Drawings
SF	Square Feet
SHT	Sheet
SHTG	Sheathing
SIM	Similar
S.J.	Shrinkage Joint, Seismic Joint or Slip Joint
S.L.D.	See Landscape Drawings
S.M.D.	See Mechanical Drawings
S.M.F.	Special Moment Frames
S.M.S.	Sheet Metal Screw
S.O.G.	Slab On Grade
SP	Space or Spacing
S.P.D.	See Plumbing Drawings
SPEC	Specification
SQ.	Square
S.S.D.	See Structural Drawings
STAGG	Staggered
STD	Standard
STIFF	Stiffener
STL	Steel
STRUCT	Structural
SYM	Symmetric
T & B	Top and Bottom
T & G	Tongue and Groove
T.B.	Tie Beam
THK	Thick
THRU	Through
T.L.	Top Lower
T.O.	Top Of
T.O.T.S.	Top of Topping Slab
T.O. CONC	Top of Concrete
T.O. PAR	Top of Parapet
T.O. PLY	Top of Plywood
T.O. PL	Top of Plate
T.O. SLAB	Top of Slab
T.O. STL	Top of Steel
TRANS	Transverse
TS	Tube Steel
T.U.	Top Upper
TYP	Typical
UBC	Uniform Building Code
U.N.O.	Unless Noted Otherwise
V.B.	Vapor Barrier
VENT	Ventilation
VERT	Vertical
V.I.F.	Verify In Field
W	Wide Flange
w/	With
w/o	Without
WD	Wood
WF	Wide Flange
W.P.	Work Point
W.P.J.	Weakened Plane Joint
WT	Weight or Structural T
W.W.F.	Welded Wire Fabric

SYMBOLS

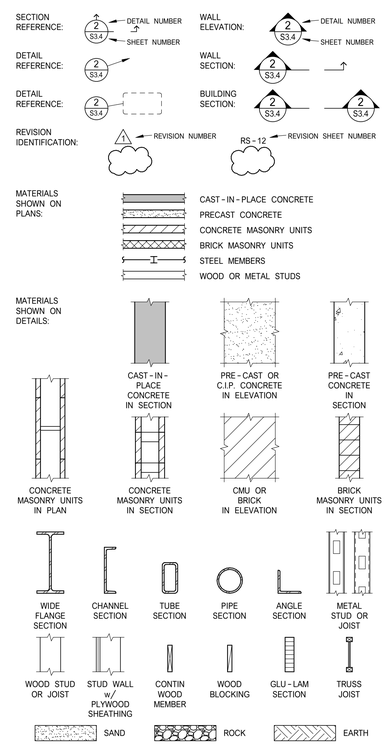

SHEET INDEX

#	TITLE	PERMIT	DSA RESUBMITTAL
S0.1	TITLE PAGE	√	√
S1.01	GENERAL NOTES	√	√
S1.02	GENERAL NOTES	√	√
S2.01	PLANS & ELEVATIONS	√	√
S3.01	TYPICAL CONCRETE DETAILS	√	√
S4.01	SHEAR WALL FRAMING	√	√
S4.02	WOOD FRAMING DETAILS	√	√

ISSUE LOG KEY
' √ ' ISSUED AS PART OF A SET
' — ' NOT A PART OF ISSUED SET
' * ' ISSUED FOR INFORMATION ONLY
' o ' PREVIOUSLY SUBMITTED FOR PLAN CHECK & PROVIDED FOR INFORMATION ONLY

ISSUE LOG

DATE	
05-12-2023	
05-12-2023	

IDENTIFICATION STAMP
DIV. OF THE STATE ARCHITECT
APP: 01-120592 INC:
REVIEWED FOR
SS ☑ FLS ☑ ACS ☑
DATE: 7/11/2023

OWNER: San Rafel City Schools

PROJECT NAME: Venetia Valley School Middle School Restroom Addition

CLIENT ADDRESS: 617 N. JACKSON AVE. SAN JOSE, CA 95133

REGISTERED PROFESSIONAL ENGINEER
DAVID J. JACKSON
NO. 4727
STRUCTURAL
STATE OF CALIFORNIA

12 MAY 2023
DATE SIGNED

REVISIONS:

	DESCRIPTION	DATE
△		
△		
△		
△		
△		
△		
△		
△		
△		
△		

PROJECT NO: 2200173.00

DATE ISSUED: 05-12-2023

SCALE: 12" = 1'-0"

S0.1

TITLE PAGE

kpff
45 Fremont Street, 28th floor
[redacted]

SVA ARCHITECTS
6 HUTTON CENTRE DR, SUITE 1150 SANTA ANA, CA 92707
T 949.809.3380 WWW.SVA-ARCHITECTS.COM

THIS DOCUMENT CONTAINS INFORMATION PROPRIETARY TO SVA ARCHITECTS INC. AND IS FURNISHED IN CONFIDENCE FOR THE LIMITED PURPOSE OF EVALUATION, BIDDING OR REVIEW. THIS DOCUMENT OR ITS CONTENTS MAY NOT BE USED FOR ANY OTHER PURPOSE AND MAY NOT BE REPRODUCED OR DISCLOSED TO OTHERS WITHOUT THE PRIOR WRITTEN CONSENT OF SVA ARCHITECTS INC. ALL RIGHTS RESERVED. © COPYRIGHT 2018.

GENERAL NOTES

GENERAL

Dimensions refer to rough concrete surfaces, face of studs, face of concrete block, top of sheathing, or top of slab, unless otherwise indicated. The Contractor shall verify all dimensions prior to the start of construction. The Architect shall be notified of any discrepancies or inconsistencies.

All drawings are considered to be a part of the contract documents. The Contractor shall be responsible for the review and coordination of all drawings and specifications prior to the start of construction. Any discrepancies that occur shall be brought to the attention of the Architect prior to the start of construction so that a clarification can be issued. Any work performed in conflict with the contract documents or any code requirements shall be corrected by the Contractor at their own expense and at no expense to the owner or Architect.

Notes and details on the structural drawings shall take precedence over general notes and typical details. Where no details are given, construction shall be as shown for similar work.

All work shall conform to the minimum standards of the following codes:

2022 California Building Code, which comprises Title 24, Part 2 of the California Code of Regulations, as adopted by the California Building Standards Commission referred to here as "The California Building Code, 2022 Edition" or "the code", and any other regulating agencies which have authority over any portion of the work, including the State of California Division of Industrial Safety, and those additional codes and standards including, but not limited to, the following incorporated codes listed below, and in these structural notes and specifications.

American Society of Civil Engineers: ASCE 7-16 with Supplement 1, Minimum Design Loads for Buildings and Other Structures including Supplement No. 1 and 2.

American Concrete Institute (ACI): ACI 318-19 Bldg. Code Requirements for Structural Concrete and Requirements for Structural Concrete and Commentary

American Institute of Steel Construction (AISC): Steel Construction Manual 15th Edition

American Institute of Steel Construction (AISC): AISC 341-16 Seismic Provisions for Structural Steel Buildings

American National Standards Institute (ANSI): ANSI 117-2020 Standard Specifications for Structural Glued Laminated Timber of Softwood Species

American National Standards Institute (ANSI): ANSI A190.1-2017 Standard for Wood Products - Structural Glued Laminated Timber

American National Standards Institute (ANSI): ANSI/APA PRR 410-16 Standard for Performance-Rated Engineered Wood Rim Boards

American Wood Council (AWC): NDS-2018 National Design Specification (NDS) for Wood Construction with 2018 Supplement

American Wood Council (AWC): SDPWS-2021 Special Design Provisions for Wind and Seismic

ASTM specifications on the structural drawings shall be of the latest version, unless otherwise noted.

Refer to the architectural drawings for the following:

Dimensions not shown on the structural drawings.
Size and location of all floor and roof openings, except as noted.
Size and location of all interior and exterior non-bearing partitions.
Size and location of all door and window openings, except as noted.
Size and location of inserts for cladding or ornamentation.
Size and location of all concrete curbs, equipment pads, pits, floor drains, slopes, depressed areas, change in level, chamfers, grooves, inserts, etc.
Floor and roof finishes.

Refer to the mechanical, plumbing, and electrical drawings for the following:

Pipe runs, sleeves, hangers, trenches, wall and slab openings, etc., except as noted.
Electrical conduit runs, boxes, and outlets in walls and slabs.
Concrete inserts for electrical, mechanical, or plumbing fixtures.
Size and location of machine or equipment bases or anchor bolts for motor mounts.

The contract structural drawings and specifications represent the finished structure. They do not indicate the method of construction. The Contractor shall provide all measures necessary to protect the structure during construction. Such measures shall include, but not be limited to, bracing and shoring for loads due to construction equipment, etc. Observation visits to the site by the Engineer shall not include inspection of the aforementioned items.

Contractor shall investigate the site, during clearing and earthwork operations, for filled excavations or buried structures, such as cesspools, cisterns, foundations, etc. If any such structures are found, the Engineer shall be notified immediately.

Openings, pockets, etc., larger than 6" shall not be placed in concrete slabs, decks, or walls, unless specifically detailed on the structural drawings. Notify the Engineer when drawings by others show openings, pockets, etc., larger than 6" not shown on the structural drawings, but which are located in structural members. For any further restrictions on openings in structural elements, see applicable sections below.

Construction material shall be spread out if placed on framed roof or floor. Load shall not exceed the design live load per square foot. Provide adequate shoring and/or bracing where the structure has not attained the design strength.

Specifications and detailing of all waterproofing and drainage items, although sometimes indicated on the structural drawings for general information purposes only, are solely the design responsibility of others.

Shop drawings, special inspections, and material sampling and testing, when required, are specified in their respective tables in the general notes and in the specifications.

DESIGN

Design conforms to the California Building Code, 2022 Edition

Live loads:
Roof .... 20 psf

Wind Analysis:
Basic wind speed, V3S .... (CBC Figure 1609A.3) VULT = 92 mph
Exposure .... (CBC Section 1609A.4.3) = C
Internal Pressure Coefficient, GCPI ... (ASCE Table 26.13-1) GCPI = ±0.18

Components and cladding design wind pressures at allowable stress levels

Interior Wall Condition (psf): +20/-25
Corner Wall Condition (psf): +25/-30

(+) Pressures indicate pressure towards wall
(-) Pressures indicate pressure away from wall
Corner conditions - extent of wall from building corner as defined by ASCE

Seismic Analysis:
Seismic Importance Factor, I .... (ASCE Table 1.5-2) I = 1.0
Risk Category .... (CBC Table 1604A.5) = II

Site Location, Latitude .... 38.0008°
Site Location, Longitude .... -122.52484°

Spectra Accel., Short Period, SS ...... (CBC Figure 1613A.2.1(1)&(2)) SS = 1.5 g
Spectra Accel., Long Period, S1 .... (CBC Figure 1613A.2.1(3)&(4)) S1 = 0.6 g
Site Classification .... (CBC Section 1613A.2.2) = D (Default)
Design Response, Short Period, SDS..... (CBC Section 1613A.2.4) SDS = 1.2 g
Design Response, Long Period, SD1 ..... (CBC Section 1613A.2.4) SD1 = 0.68 g
Seismic Design Category .... (CBC Table 1613A.2.5(1)&(2)) = D

Lateral System (ASCE Table 12.2-1)..... Bearing Wall System, Light-Frame Wood Walls w/ Wood Structural Panel Shear Wall

Response Modification Factor, ... R = 6.5
System Overstrength Factor,............ Ω_0 = 3
Deflection Amplification Factor........ Cd = 4

Seismic Response Coefficient, CS ...... (ASCE Section 12.8.1) CS = 0.22

Base Shear, V .... V = 10.3 Kips (N-S)
V = 10.3 Kips (E-W)

FOUNDATIONS

Foundations design conform to California Building Code Chapter 18A. The presumptive load-bearing values provided in CBC Table 1806A.2 for Clay, Sandy Clay class of material shall be used for foundation design

Maximum soil pressure = 1500 psf DL
= 1500 psf DL + LL
Lateral bearing pressure = 100 pcf
Lateral sliding resistance = 130 psf

Footings

Footings shall extend to such depth as to bear upon firm, undisturbed native soil or engineered fill. All abandoned footings, utilities, etc. shall be removed. All footings shall be founded at a depth at least 18" below the lowest adjacent grade or bottom of slab on grade. Footing depths shown on the structural drawings are minimum depths. Footings may be poured in neat excavated trenches.
Excavations for footings shall be observed by the Geotechnical Engineer prior to placing reinforcing and concrete. The Contractor shall notify the Geotechnical Engineer when the excavations are ready for observation.

Engineered Fill

Engineered fill below footings shall be compacted to 90% relative compaction as determined by the ASTM D1557 compaction test method and under the observation of the Geotechnical Engineer.

Slabs On Grade

Provide a 15 mil vapor barrier complying with ASTM E1745 Class A with a WVTR less than or equal to 0.008 per ASTM E96, place in accordance with ASTM E1643 over 4" rock course under slabs on grade. Rock course shall be rolled to a smooth surface

Backfill

All excavations shall be properly backfilled. Do not place backfill behind retaining walls before the concrete or grout has attained full design strength. The Contractor shall brace or protect all building and pit walls below grade from lateral loads until the attaching floors are completely in place and have attained full strength. The Contractor shall provide for the design, permits, and installation of such bracing.
Footing backfill and utility trench backfill within the building area shall be mechanically compacted in layers in accordance with the Geotechnical Report and observed by the Geotechnical Engineer or Inspector. Flooding will not be permitted.

Geotechnical Engineer Observation Letter

The Geotechnical Engineer shall prepare a letter for the Building Department giving an opinion regarding conformance of the footing excavations, engineered fill compaction, subgrade preparation, and backfilling with the requirements contained in the Geotechnical Report.

REINFORCING STEEL

Reinforcing Steel detailing, fabrication, and placement shall conform to the "California Building Code", Chapter 19A; the "Manual of Standard Practice of the Concrete Reinforcing Steel Institute", latest edition; and the "Building Code Requirements for Structural Concrete and Commentary", ACI 318-14; unless otherwise noted.

Standards:
Reinforcing steel shall conform to the following standards:

Deformed Bars, #3 .... ASTM A615, Grade 40
Deformed Bars, #4 and larger .... ASTM A615, Grade 60

Placing: All steel reinforcement shall be securely tied in place so as to maintain their exact position before and during the placement of concrete. Reinforcing steel shall be securely tied in place with #16 annealed iron wire. Bars in beams and slabs shall be supported on well-cured concrete blocks or approved plastic tipped metal chairs, as specified by CRSI Manual of Standard Practice, MSP-1. Accessories for epoxy-coated reinforcing, where shown on plans, shall be as noted in the Specifications. Wire fabric in slabs shall be securely fastened to supporting devices to maintain their position during concrete placement.

Lap bars 58 diameters, laps shall be staggered, for #3 to #6 bars unless otherwise noted.

Lap bars 72 diameters, laps shall be staggered, for #7 to #11 bars unless otherwise noted.

Mechanical splices: Where noted on plans, provide threaded couplers capable of developing at least 125% of the specified yield strength of the reinforcing steel. Couplers shall be Type 2, as per ACI 318-14 Section 18.2.7. Threaded Couplers shall be as manufactured by Erico Company, or approved equal with a current evaluation report from an approved source.

Headed Reinforcement: Where noted on plans, provide rebar terminators capable of developing the tensile strength of the reinforcing steel. Rebar terminators shall be as manufactured by Erico Inc (IAPMO ES ER-0188) or approved equal with a current evaluation report from an approved source.

Form Saver: Form savers are to be used where noted on the drawings. In addition, form savers may be substituted in lieu of dowels at construction joints. Where substituted, contractor to submit for review prior to construction. Form savers shall be capable of developing at least 125% of the specified yield strength of the reinforcing steel. Form savers shall be Type 2, as per ACI 318-14 Section 18.2.7. Form Savers shall be as manufactured by Erico Inc (IAPMO ES ER-0129) or approved equal with a current evaluation report from an approved source.

Welding: Where welding of reinforcing bars is approved by the Engineer, it shall be done by AWS certified welders using E80XX or approved electrodes. Welding procedures shall conform to the requirements of the "Structural Welding Code - Reinforcing Steel", AWS-D1.4

Clear distances, steel to forms, unless noted otherwise:

Slabs not exposed to weather, joists, interior wall surfaces .....3/4"
Exterior wall surfaces, slabs exposed to weather, #5 and smaller .1-1/2"
Exterior wall surfaces, slabs exposed to weather, #6 and larger ..2"
Column Ties, Beam Ties ....1-1/2"
Clear distance between bars ....2"
Slabs on rolled grade ....1-1/2"
Formed surfaces in contact with earth ....2"
Unformed surfaces in contact with earth ....3"

Shop drawings shall be submitted to the Architect for review prior to fabrication. Shop drawings shall include elevations of all beams and columns showing bar and lap locations. See Shop Drawing Submittal Requirements elsewhere in General Notes. Submit mill certificates for reinforcing steel prior to rebar placement.

CONCRETE WORK

Forms shall be properly constructed conforming to concrete surfaces as shown on the drawings, sufficiently tight to prevent leakage, sufficiently strong, and braced to maintain their shape and alignment until no longer needed to support the concrete. Forms for exposed concrete shall be plywood, using sheets as large as possible, with all joints tightly fitted and blocked, and shall produce a finished concrete surface which is smooth, true, and free from blemishes according to accepted standards for architectural concrete.

Refer to architectural, electrical, and mechanical drawings for details at door and window openings, floor type hinges, etc., and for location of sleeves, pipes, and other embedded items. Openings through slabs or walls not shown on the structural drawings which would interrupt reinforcing bars shall not be made without approval of the Architect.

Debris should be entirely removed from forms prior to concrete placement.

Horizontal construction joints shall be located as shown on the structural drawings, and the hardened concrete surfaces shall be cleaned by sand-blasting or other approved means to expose firmly embedded aggregates prior to pouring additional concrete in contact with these surfaces. Vertical construction joints through beams or slabs shall be located only as shown on structural drawings.

Forms and shoring shall not be removed until the concrete has attained sufficient strength to withstand all loads to be imposed without excessive stress, creep, or deflection. See specifications for shoring requirements.

Concrete shall be ready mixed conforming to ASTM C94. Cement shall be Portland Cement Type II, conforming to ASTM C150. All hardrock (H.R.) concrete used in suspended slabs and slabs on grade shall be designed for low shrinkage (L.S.). Acceptable coarse aggregates for low shrinkage concrete include Kaiser Clayton, Granite Rock, Limestone, Sechelt, or Orcas aggregates. Fine aggregates acceptable for low shrinkage concrete include Sechelt, Orcas, or Granite Rock sands. Alternative aggregates may be submitted provided they provide a concrete mix with a shrinkage limitation of 0.040% after 28 days of drying. Submit test data to Architect for review.

Use maximum size aggregate as noted below.

Use 3/8" maximum aggregate where necessary for proper placing, such as in thin or congested sections, etc. Superplasticizers may be used to improve workability in thin or congested sections. Incorporate superplasticizers into concrete mix designs.

Flyash shall consist of pozzolanic admixtures conforming to ASTM C618, Class F, and shall be used in quantities noted below. See specifications for additional requirements.

Ground Granulated Blast Furnace Slag (GGBFS) shall conform to ASTM C989 for slag cement and be used in quantities noted below. See specifications for additional requirements.

Carbon Sequestration shall consist of post-industrial, recycled CO2, sourced from an emitter and chemically mineralized into the mix. See specifications for additional requirements.

Admixtures used in concrete shall conform to the following ASTM standards, shall be used in dosages recommended by the manufacturer, and shall not contain more chloride than is found in the municipal drinking water supply. Liquid volume in ASTM C494, Type C admixtures shall be added to water content and water cement ratio calculations.

Water reducers	ASTM C494, Type A
Mid-range water reducers	ASTM C494, Type A/F
High-range water reducers	ASTM C494, Type F
Hydration Stabilizers (Retarders)	ASTM C494, Type B and D
Accelerators	ASTM C494, Type C
Air Entraining Agents	ASTM C260
Corrosion Inhibitors	ASTM C494, Type C
Shrinkage Reducing Admixtures	ASTM C494, Type F
Viscosity Modifying Admixtures	ASTM C494, Type S
Silica Fume	ASTM C1240
Crystalline Waterproofing	No ASTM standard
Post-Industrial, recycled CO_2	No ASTM standard

Cementitious Material (CM) content includes all cement and Supplemental Cementitious Materials (SCM)

Contractor shall submit for review of the Architect the concrete mixes proposed for use, designed by the concrete supplier and reviewed by a DSA-approved testing laboratory.Concrete mixes shall comply with DSA IR 19-3.

CONCRETE WORK (continued)

Concrete shall have the following characteristics:

Concrete Location	Max Aggregate	Strength @ 56 days (psi)	Min Slump[1] (in)	Min CM Content (Sacks)	GGBFS Content[5] Min, Max (%)	Flyash Content[5] Min, Max (%)	Total SCM Content (%)	Max Water Content (Gals)	Max Water/ Cement Ratio
Footing & Grade Beams[4]	1"x#4 HR	3000	4	5.0	40,50	20,30	70	34	0.50
Slab on grade[4]	1"x#4 HR-LS	3000	3.5	5.0	40,50	20,30	70	33	0.45

NOTES:
1. Slump shall be the minimum consistent with proper placing. Achieve slump with water reducing admixtures(ASTM C-494 Type A, F, or A/F) for desired workability.
2. Use high range water reducing admixture (superplasticizer) as needed.
3. Use water reducing admixtures or mid-range water reducing admixtures for desired workability.
4. Use recycled carbon dioxide (CO2) sourced from an emitter, chemically mineralized into concrete mix. Use 4.0% CO2 per cwt cement material (not cementitious).
5. Percentages of GGBFS and Flyash may be individually adjusted within the limits provided in order to maintain total SCM content

Conduit, when embedded in concrete slabs, shall be spaced with one conduit diameter clear (larger conduit) or 1 inch clear, whichever is greater, between adjacent conduits or rebar. Conduit shall not be located directly over and parallel to rebar. Embedded conduit can be tied to rebar when oriented perpendicular to them, provided the location of rebar is not affected by the conduit. Conduit without clearance noted above shall be submitted to the architect for review prior to installation. Added trim reinforcement will be required where clearances cannot be met, such as electric panel rooms.

Sleeves, when installed in concrete, shall be spaced with one sleeve diameter (larger sleeve) clear between adjacent sleeves, rebar, or 1 inch, whichever is greater. Sleeves may not touch rebar or other support hardware. Provide clearance between sleeves and reinforcing for typical slab edge conditions. Added trim reinforcement is required per the typical slab opening detail when sleeves exceed 12" diameter or are placed in groups where the out-to-out dimension exceeds 12" in any direction. Sleeve placement shall not interfere with the rebar placement without the approval of the Engineer.

A Sleeve/Penetration Slab Shop drawing shall be submitted for review prior to fabrication. Shop drawings shall include all concrete sleeves, penetrations, and openings, from all disciplines, coordinated, dimensioned and located on plan. See Shop Drawing Submittal Requirements elsewhere in General Notes.

The Contractor shall inform the Architect at least 3 days prior to pouring any structural concrete so that the Architect may have the opportunity of reviewing the work prior to concrete placement.

All concrete except slabs on grade 6" thick or less shall be mechanically vibrated so as to completely fill the forms without causing undue segregation.

For 56 day strengths and 4" diameter x 8" long cylinders:
For mild reinforced concrete, 6 test cylinders from each 50 yards, or fraction thereof, poured in any one day, shall be secured and tested by an independent testing agency; one to be tested at 7 days for information, one at 28 days for information, and three at 56 days for acceptance, and one held in reserve.

For 56 day strengths and 6" diameter x 12" long cylinders:
For mild reinforced concrete, 5 test cylinders from each 50 yards, or fraction thereof, poured in any one day, shall be secured and tested by an independent testing agency; one to be tested at 7 days for information, one at 28 days for information, and two at 56 days for acceptance, and one held in reserve.

The Contractor shall remove and replace any concrete which fails to attain specified strength in 56 days if so directed by the Architect. Any defects in the hardened concrete shall be satisfactorily repaired or the hardened concrete shall be replaced.

IDENTIFICATION STAMP
DIV. OF THE STATE ARCHITECT
APP: 01-120592 INC:
REVIEWED FOR
SS ☑ FLS ☑ ACS ☑
DATE: 7/11/2023

OWNER: San Rafel City Schools

PROJECT NAME: Venetia Valley School Middle School Restroom Addition

CLIENT ADDRESS: 617 N. JACKSON AVE. SAN JOSE, CA 95133

REGISTERED PROFESSIONAL ENGINEER
DAVID J. ROSS
No. 4127
STRUCTURAL
STATE OF CALIFORNIA

12 MAY 2023
DATE SIGNED

REVISIONS:

	DESCRIPTION	DATE
△		
△		
△		
△		
△		
△		
△		
△		
△		
△		
△		

PROJECT NO: 2200173.00
DATE ISSUED: 05-12-2023
SCALE: 12" = 1'-0"

S1.01

GENERAL NOTES

kpff
45 Fremont Street, 28th floor
[redacted]

SVA ARCHITECTS
6 HUTTON CENTRE DR, SUITE 1150 SANTA ANA, CA 92707
T 949.809.3380 WWW.SVA-ARCHITECTS.COM

THIS DOCUMENT CONTAINS INFORMATION PROPRIETARY TO SVA ARCHITECTS INC. AND IS FURNISHED IN CONFIDENCE FOR THE LIMITED PURPOSE OF EVALUATION, BIDDING OR REVIEW. THIS DOCUMENT OR ITS CONTENTS MAY NOT BE USED FOR ANY OTHER PURPOSE AND MAY NOT BE REPRODUCED OR DISCLOSED TO OTHERS WITHOUT THE PRIOR WRITTEN CONSENT OF SVA ARCHITECTS INC. ALL RIGHTS RESERVED, © COPYRIGHT 2018.

GENERAL NOTES

CARPENTRY

Framing lumber shall meet the following minimum standard except where otherwise noted:

USE		SPECIES	GRADE	AUTHORITY
Mudsills	2 x 4	D.F.	Standard or Better Pressure Treated	CBC Sec. 2303.1.9
	2 x 6 and larger	D.F.	No. 2 or Better Pressure Treated	CBC Sec. 2303.1.9
Plywood		A.P.A. Grade Marked	CC Exterior or CD Exposure 1	CBC Standards Sec. 2305 & DOC PS1 & PS2
OSB		A.P.A. Grade Marked	Exterior or CD Exposure 1	CBC Standards Sec. 2305 & DOC PS1 & PS2
Horizontal framing member:				
4 x 4 and smaller		D.F.	No. 2	WCLIB & WWPA
2 x roof joists and rafters		D.F.	No. 2	WCLIB & WWPA
2 x floor joists		D.F.	No. 2	WCLIB & WWPA
4 x header and beams		D.F.	No. 2	WCLIB & WWPA
6 x 6 and larger		D.F.	No. 1	WCLIB & WWPA
Vertical framing lumber:				
2 x 4 & 3 x 4 studs		D.F.	Stud	WCLIB & WWPA
2 x 6 & 2 x 8 studs		D.F.	No. 2	WCLIB & WWPA
4 x 4 & 4 x 6 posts		D.F.	No. 2	WCLIB & WWPA
4 x 8 & larger posts		D.F.	No. 1	WCLIB & WWPA
6 x 6 & larger posts		D.F.	No. 1	WCLIB & WWPA
All other framing lumber, U.N.O.		D.F.	Standard & Better	WCLIB & WWPA

Solid sawn joists shall be grade stamped "S-DRY" which indicates a moisture content not exceeding 19 percent.

Stud walls shown on plans are nonbearing partitions walls, bearing walls or shear walls below the framing level, unless noted otherwise. Studs shall be size and spacing as noted in the drawings, see plans, schedules, and architectural drawings. Where not noted otherwise, stud walls shall be 2 x 4 at 16"o.c.

Minimum framing nailing shall conform to CBC Table 2304.10.1. All nails shall be common wire nails. Predrill nail holes to 70% of nail shank diameter where nailing tends to split wood.

Unless otherwise noted, all wood sill plates under exterior or shear walls in contact with concrete or masonry shall be bolted to the concrete or masonry with 5/8" diameter x 12" bolts at 4'-0"o.c. beginning at 9"o.c. maximum from each end of the plates. The bolts shall extend a minimum of 7" into the concrete or masonry.

All lumber in contact with concrete shall be pressure treated lumber with AWPA treatment C2 using either Alkaline Copper Quaternary (ACQ type B and D), Copper Azole (CBA-A, CA-B), or Sodium Borates (SBX). Anchor bolts, fasteners, and Metal framing connectors in contact with pressure treated lumber shall be hot-dipped galvanized to a rating of G-185 per ASTM A653.

Provide 2 studs, each end, under all 4 x 10 and larger beams or headers at spans larger than 5 feet, unless otherwise noted. Where posts or multiple studs under beams or headers are called for on drawings those posts or multiple studs shall be carried to the foundation.

At solid sawn joist provide the following as a minimum, unless shown otherwise:
2" x full depth solid blocking between joists over support.
2" x full depth solid blocking between joists over and below partition walls.

Bridging shall be 2 x solid blocking or approved metal bridging, installed as follows:
Roof joists more than 8" depth, 8'-0"o.c. maximum, not more than 8'-0" from support.

Joist hangers and other metal framing accessories are referred to on plans by particular type as manufactured by Simpson Strong-Tie Company, Stockton, California. Accessories of other manufacturer with equivalent load carrying characteristics may be used.

Fire stopping, backing for interior finishes, nonbearing walls, and other non-structural framing are not necessarily shown on structural drawings.

Roof Sheathing

Plywood sheathing shall be 5/8" (19/32" Performance Category), Ident Index 32/16
OSB sheathing shall be 5/8" (19/32" Performance Category), Ident Index 32/16

Wall Sheathing

Plywood sheathing shall be 1/2" (15/32" Performance Category), Ident Index 16/0
OSB sheathing shall be 1/2" (15/32" Performance Category), Ident Index 16/0

Sheathing Installation - Plywood roof and floor sheathing shall be laid with the grain of the outer plies perpendicular to the framing members, shall be continuous over 2 joist bays minimum and end joints shall be staggered. Plywood or OSB Wall sheathing shall be applied vertically.

NOTE: For panelized roof systems only, with 1/2" or 5/8" Structural I, Identification Index 32/16 plywood, sheathing shall be laid with the grain of the outer plies parallel to framing members.

Unless otherwise noted, plywood or OSB sheathing nails shall be common. Equivalent pneumatically driven nails or staples may be used if fastener manufacturer has received ICC approval according to ESR-1539, or equal. Fasteners to be substituted shall be equivalent in lateral and withdrawal strength to the size of common nail specified.

Use of machine nailing is subject to a satisfactory jobsite demonstration for each project and the approval by the project architect or structural engineer. The approval is subject to continued satisfactory performance. If nail heads penetrate the outer ply more than would be normal for a hand hammer or if minimum allowable edge distances are not maintained, the performance will be deemed unsatisfactory.

Roof Sheathing - Roof sheathing shall be unblocked/blocked where shown. Edge blocking shall be 2x4 flat, minimum, where indicated. When 1/2" roof sheathing is specified, provide Plyclips or approved equal connector at midspan between each support when rafter spacing exceeds 16"o.c., unless edges are blocked. For Fire Retardant Treated requirements see architectural drawings and Fire Retardant Treated section above.

Typical nailing shall be 10d at 6"o.c. at all supported edges and over shear walls, and 10d at 12"o.c. at all intermediate supports, unless otherwise noted, see plans.

Where roof sheathing is installed over prefabricated wood trusses, refer to the structural drawings for lateral loads on trusses above shear walls and at truss tie lines, and provide edge nailing for all trusses with lateral loads.

Wall Sheathing - All walls that are designated thus ------- on plans shall be sheathed with plywood or OSB sheathing. Block all unsupported edges of sheathing. For Fire Retardant Treated requirements see architectural drawings and Fire Retardant Treated section above.

Typical nailing shall be 10d at 6"o.c. at all edges, and 10d at 12"o.c. at all intermediate supports, unless otherwise noted, see plans.

Plywood or OSB sheathed walls, denoted with a symbol, are designated as shear walls and shall be nailed as per the Shear Wall Nailing Schedule.

CARPENTRY (continued)

GLUED LAMINATED BEAMS

Glued laminated members shall be manufactured according to the ANSI A190.1 "Standard for Wood Products - Structural Glued Laminated Timber," latest edition. Adhesive shall be for wet condition of service and an ANSI Certificate of Conformance is required.

Glued laminated beams shall be grade 24F-V4 and provide stress values that meet or exceed the following:

Bending Fb (Bottom Fibers) .... 2400 psi
Bending Fb (Top Fibers) - Single Span .... 1850 psi
Bending Fb (Top Fibers) - Multiple Spans or Cantilevers .. 2400 psi
Horizontal Shear Fv .... 265 psi
Modulus of Elasticity .... 1800 ksi
Compression Perpendicular to Grain .... 650 psi

Provide cambers as noted on the drawings.

Appearance Grade Shall Be: Industrial, when concealed from view.
Architectural, when exposed to view.

Glued laminated members include 1 hour fire resistance. Beams shall be manufactured with additional tension laminations per ANSI A190.1 and shall be stamped "1-HOUR FIRE RATING". Connectors and fasteners shall be protected within char layer, protected by wood, gypsum board, or alternate approved appembly where fire endurance is required at wood connections. Where connections are protected by char layer, clear cover of 1.9" minimum dimension from face of exposed member to connector is required. See architectural drawings for fire-rated assemblies.

Manufacturer shall submit shop drawings to the Architect for review prior to fabrication.

POWDER ACTUATED FASTENERS - SILL PLATES

Except at wood framed shear walls and exterior walls, wood sill plates may be fastened to the concrete slabs using powder actuated fasteners spaced at 16" o.c. maximum, unless otherwise noted. The fasteners shall be Hilti X-U as manufactured by Hilti, Inc. (ICC Evaluation Report ESR-2269) or approved equal with a current evaluation report from an approved source.

DRILLED ADHESIVE DOWELS

Drilled dowels shall be Hilti HIT HY200 Anchoring System as manufactured by Hilti, Inc. (ICC Report ESR-3187). All drilled holes shall be sized according to the manufacturer's recommendations.

Drilled epoxy dowels shall be installed in accordance with the manufacturer's recommendations.

Drilled dowels shall not be used to resist vibratory or shock (impact) loads.

Minimum dowel embedment shall be as indicated in the appropriate tables below unless otherwise indicated on the drawings. All embedments noted on the drawings are effective embedment U.N.O.

All rebar dowels shall be ASTM A615 grade 60 U.N.O.

Continuous special inspection is required during installation of all epoxy and resin dowels.

When installing dowels in existing reinforced concrete, exercise caution to avoid cutting or damaging the existing reinforcing bars. Maintain a minimum clearance of one inch between the reinforcement and the drilled-in dowel and/or pin.

Epoxy dowels installed in normal-weight (stone aggregate) concrete shall have minimum embedments and shall be tested per the "Post Installed Anchor Testing" section.

Drilled adhesive dowels shall have edge distances greater than 1.5 times embedment and spacing greater than 24 times dowel diameter unless otherwise noted on the drawings.

Drilled adhesive dowels shall not be installed in overhead conditions.

Drilled adhesive dowels shall be installed in dry concrete with a minimum age of 21 days.

POWDER ACTUATED FASTENERS - SILL PLATES (continued)

EXPANSION ANCHORS

Expansion Anchors installed in concrete shall be KB-TZ2 as manufactured by Hilti, Inc. (ICC Evaluation Report ESR-4266) or approved equal with a current ICC report. All drilled holes shall be sized according to the manufacturer's recommendations.

Anchor diameter refers to the thread size of the the wedge anchor. All drilled holes shall be sized according to the manufacturer's recommendations. Expansion anchors shall be installed in accordance with the manufacturer's recommendations.

Expansion anchors shall not be used to resist vibratory or shock loads.

Minimum expansion anchor embedment shall be indicated on the drawings. Minimum embedment indicated on the drawings is the minimum effective embedment undless otherwise indicated.

HIGH STRENGTH SCREW ANCHORS

High-Strength Screw Anchors shall be Titen HD as manufactured by Simpson Strong Tie, Inc. (ICC Evaluation Report ESR-2713 for installation in concrete, ICC Evaluation Report ESR-1056 for installation in grouted masonry) or approved equal with a current ICC report. All drilled holes shall be sized according to the manufacturer's recommendations.

Screw anchors shall not be used to resist vibratory or shock loads.

Minimum screw anchor embedment shall be indicated on the drawings. Minimum embedment indicated on the drawings is the minimum effective embedment unless otherwise indicated.

The following criteria apply for the acceptance of installed anchors:

POST-INSTALLED ANCHOR TESTING

The Owner's testing agency shall perform tension load tests on anchors and dowels installed in hardened concrete. L.V.P.s are not required to be tested. Refer to the tables below for test load values.

Post-installed anchors used for structural applications shall be tested at a frequency of 100%. Anchors used for nonstructural applications such as equipment anchorage shall be tested at a frequency of 50% or alternate bolts in a group including at least one half the anchors in each group. Anchors used for sill track bolting shall be tested at a frequency of 10%. If any anchor fails testing, all anchors of the same type shall be tested, which are installed by the same trade, not previously tested until 20 consecutive anchors pass, then resume initial testing frequency.

Test drilled epoxy dowels with the hydraulic ram method. Test expansion anchors and screw anchors with the torque wrench method

The Owner's testing agency shall develop and utilize an effective method of field marking locations of passed and failed anchor tests.

Test equipment including torque wrenches are to be calibrated by an approved testing laboratory in accordance with the standard recognized procedures.

The following criteria apply for the acceptance of installed anchors:

HYDRAULIC RAM METHOD:
The anchor shall maintain the test load for a minimum of 15 seconds and shall exhibit no observable movement at the applicable test load.

Reaction loads from test fixtures may be applied close to the anchor being tested provided the anchor is not restrained from withdrawing by the fixture(s).

Tension test loads in the tables below are based on the minimum of 125 percent of the maximum design strength of the dowel provided in the ICC Report, but not to exceed 80 percent of the yield strength of the dowel.

The tension values listed in the tables below are only applicable when the anchors are installed with special inspection as set forth in section 1701A of the code.

Drilled adhesive dowel capacities listed in the table below assume maximum short-term temperatures of 130 degrees F and maximum long-term temperatures of 110 degrees F. Short-term temperatures are those that occur over brief intervals such as a result of diurnal cycling. Long-term temperatures are roughly constant over significant periods of time.

EPOXY DOWEL TESTING REQUIREMENTS (ICC REPORT ESR-3187)

HILTI HY200 DOWEL IN NORMAL WEIGHT CONCRETE					
DOWEL SIZE	MINIMUM EMBEDMENT	MINIMUM THICKNESS	TENSION TEST LOAD (lbs)	TENSION CAPACITY (STRENGTH) (lbs)	MIN f'c (psi)
#4	5 1/2"	6 3/4"	4,500	3,600	2500
#5	6 3/4"	8 1/4"	9,125	7,300	2500
#6	8"	9 3/4"	13,625	10,900	2500
#7	9 1/2"	11 1/2"	17,500	14,000	2500
#8	10 3/4"	13"	21,180	16,950	2500
#9	12"	14 3/4"	24,900	19,950	2500

TORQUE WRENCH METHOD:

The applicable test torque must be reached within the following limits. For wedge or sleeve type anchors: one-half turn of the nut. For 3/8 inch sleeve type anchors and all screw anchors: one-quarter turn of the nut.
If the manufacturer's recommended installation torque is less than the test torque noted in the table, the manufacturer's recommended installation torque should be used in lieu of the tabulated values.

EXPANSION ANCHOR TESTING REQUIREMENTS (ICC REPORT ESR-1917)

NORMAL WEIGHT CRACKED CONCRETE SLAB - CARBON STEEL ANCHOR					
ANCHOR DIAMETER (INCHES)	EMBED DEPTH (INCHES)	MIN CONC THICKNESS (INCHES)	TORQUE TEST LOAD (LBS)	REQUIRED EDGE DISTANCE (INCHES)	REQUIRED SPACING (INCHES)
3/8	2	4	25	4 3/8	6
1/2	2	4	40	5 1/2	6
	3 1/4	6	40	7 1/2	9 3/4
5/8	3 1/8	5	60	6 1/2	9 3/8
	4	6	60	8 3/4	12
3/4	3 3/4	6	110	10	11 1/4
	4 3/4	8	110	9	14 1/4

SCREW ANCHOR TESTING REQUIREMENTS (ICC REPORT ESR-2713)

NORMAL WEIGHT CRACKED CONCRETE SLAB - CARBON STEEL ANCHOR					
ANCHOR DIAMETER (INCHES)	EMBED DEPTH (INCHES)	MIN CONC THICKNESS (INCHES)	TORQUE TEST LOAD (LBS)	REQUIRED EDGE DISTANCE (INCHES)	REQUIRED SPACING (INCHES)
1/4	1 5/8	3 1/4	24	3	4 7/8
	2 1/2	3 1/2	24	6	7 1/2
3/8	2 1/2	4	50	2 11/16	7 1/2
	3 1/4	5	50	3 5/8	9 3/4
1/2	3 1/4	5	65	3 9/16	9 3/4
	4	6 1/4	65	4 1/2	12
5/8	4	6	100	4 1/2	12
	5 1/2	8 1/2	100	6 3/8	16 1/2
3/4	4	6	150	6	12
	5.5	8.75	150	6 3/8	16 1/2
	6.25	10	150	7 5/16	18 3/4

SUSPENDED CEILING

Suspension wires shall be of #12 gauge spaced at 4'-0"o.c. or #10 gauge spaced at 5'-0"o.c. along each main runner. The terminal ends of each cross runner and main runner shall be supported independently at a maximum of 8" from each wall with #12 gauge wire. Each vertical wire shall be attached to the ceiling suspension member and to the structure above with a minimum of three tight turns in 1-1/2 inches. The connection to the structure above shall be capable of carrying not less than a 100 pound load.

Lateral bracing shall consist of four angled wires and a compression strut. Four #12 gauge wires shall be secured to the main runner within 2" of the cross runner intersection and splayed 90 degrees from each other at an angle not exceeding 45 degrees from the plane of the ceiling. Each angled wire shall be attached to the ceiling suspension member and to the structure above with a minimum of four tight turns in 1-1/2 inches. The strut shall be fastened to the main runner at the intersection of the splayed wires and fastened to a roof or floor structural member above. These horizontal restraint points shall not be placed more than 12'-0"o.c. in both directions with the first point within 4'-0" from each wall. Refer to Detail

SHOP DRAWING SUBMITTALS

When indicated with a "X", the following items shall have either a) shop drawings or b) certificates of conformance or c) shop drawings, calculations, and details submitted to the architect for review and approval prior to fabrication. When shop drawings, calculations, and details are required, submittals (drawings and calculations) must be signed and stamped by a Civil or Structural Engineer registered in the State of California. For additional information on the contents of the submittals, refer to the project specifications and the specific general notes sections. Submit two prints or an electronic (PDF copy) of calculations (where indicated) and shop drawings to the Architect for review.

Item	Shop Drawings	Certificate[1]	Shop Dwgs, calcs, and Details	Remarks
Concrete reinforcing	X			
Rebar Couplers	X			
Concrete, mixes	X			
Concrete, cement		X		
Concrete, fine aggregates		X		
Concrete, coarse aggregates		X		
Concrete, admixtures	X			
Construction Joint Layout	X			
Concrete Penetration Plan	X			Plan with sleeves /blockouts coordinated, dimensioned, & located
Expansion Anchors	X			
Epoxy for Bolts or Rebar	X			
Screw Anchors	X			
Powder Actuated Fasteners	X			
Low Velocity Pins, L.V.P.	X			
Glued-laminated beams/columns	X			

(1) Certificates shall be dated within 3 months of the submittal.

MATERIAL SAMPLING AND TESTING

See DSA Form 103 for material sampling and testing requirements

STRUCTURAL OBSERVATION

The structural engineer of record, or his designated engineer, shall provide structural observation of the structural system for general conformance to the approved plans and specifications at significant construction stages and at completion of the structural system, as required by CBC Section 1704A.6. Written reports shall be submitted to the owner's representative, special inspector, contractor, and building official.

The structural observer shall submit to the building official a written statement that the site visits have been made and identify any reported deficiencies which, to the best of the structural observer's knowledge, have not been resolved.

Structural System Components requiring observation in this project include:

Item	Required	Remarks
Foundation Reinforcement	X	Prior to first pour
Shear Wall Nailing and Anchorage	X	
Diaphragm Nailing	X	
Diaphragm Ties and Straps	X	

Structural observation does not include or waive the responsibility of the special inspections required by CBC Section 1705A, or other sections of the code as noted elsewhere in the Contract Documents.

SPECIAL INSPECTION

See DSA Form 103 for special inspection requirements

IDENTIFICATION STAMP
DIV. OF THE STATE ARCHITECT
APP: 01-120592 INC:
REVIEWED FOR
SS ☑ FLS ☑ ACS ☑
DATE: 7/11/2023

OWNER: San Rafel City Schools

PROJECT NAME: Venetia Valley School Middle School Restroom Addition

CLIENT ADDRESS: 617 N. JACKSON AVE. SAN JOSE, CA 95133

REGISTERED PROFESSIONAL ENGINEER
DAVID J. ROSS
No. 4127
STRUCTURAL
STATE OF CALIFORNIA

12 MAY 2023
DATE SIGNED

REVISIONS:

	DESCRIPTION	DATE
△		
△		
△		
△		
△		
△		
△		
△		
△		
△		
△		

PROJECT NO: 2200173.00
DATE ISSUED: 05-12-2023
SCALE: 12" = 1'-0"

S1.02

GENERAL NOTES

kpff
45 Fremont Street, 28th floor

SVA ARCHITECTS

6 HUTTON CENTRE DR, SUITE 1150 SANTA ANA, CA 92707
T 949.809.3380 WWW.SVA-ARCHITECTS.COM

THIS DOCUMENT CONTAINS INFORMATION PROPRIETARY TO SVA ARCHITECTS INC. AND IS FURNISHED IN CONFIDENCE FOR THE LIMITED PURPOSE OF EVALUATION, BIDDING OR REVIEW. THIS DOCUMENT OR ITS CONTENTS MAY NOT BE USED FOR ANY OTHER PURPOSE AND MAY NOT BE REPRODUCED OR DISCLOSED TO OTHERS WITHOUT THE PRIOR WRITTEN CONSENT OF SVA ARCHITECTS INC. ALL RIGHTS RESERVED, © COPYRIGHT 2018.

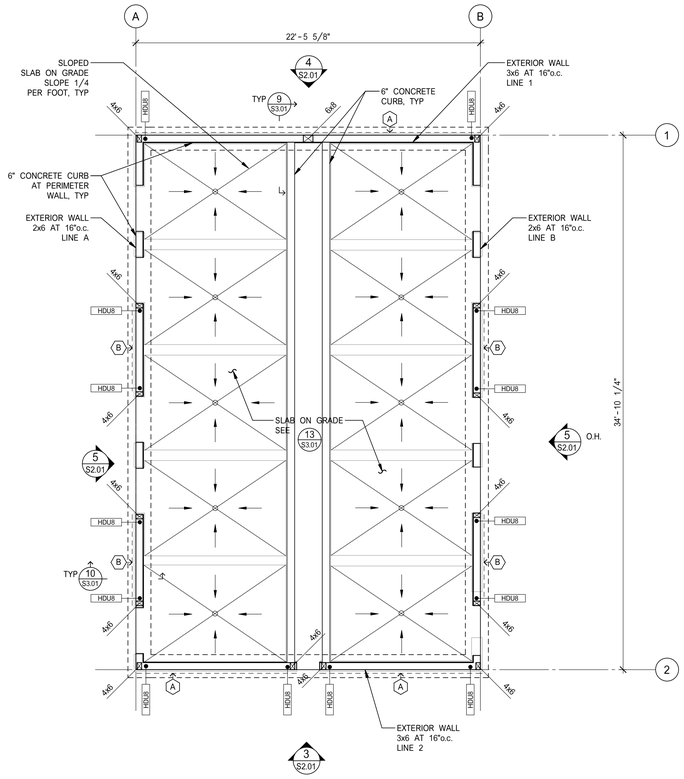

LEVEL 1 FOUNDATION PLAN

SCALE: 1/4" = 1'-0" | KPFF | **1** | S2.01

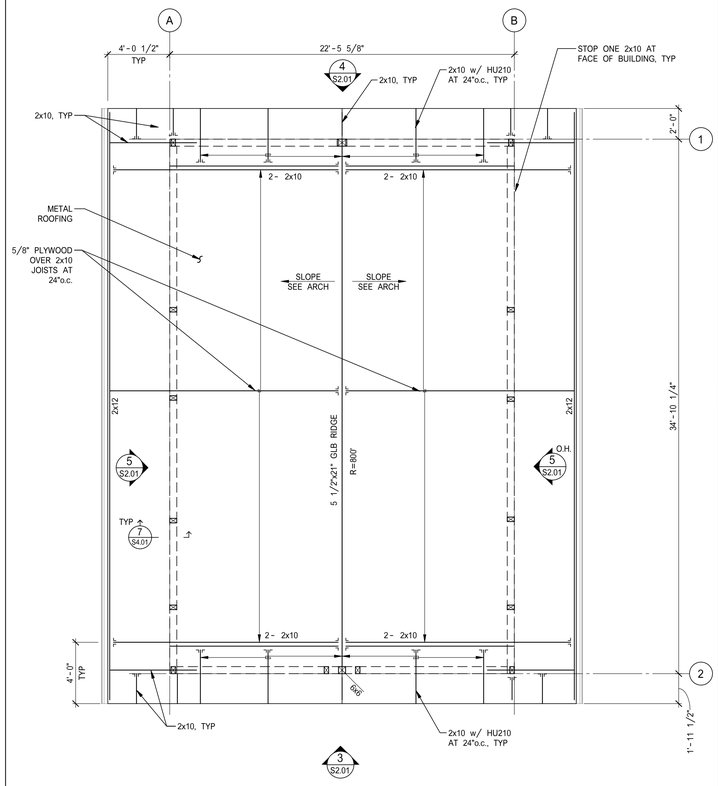

ROOF PLAN

SCALE: 1/4" = 1'-0" | KPFF | **2** | S2.01

NOTES:

1. FOR TYPICAL WOOD WALL DETAILS REFER TO SHEETS S4.01 THRU S4.02
2. PLYWOOD SHEATHING TO BE GLUED AND NAILED TO JOISTS, SEE GENERAL NOTES & 1/S4.01
3. TYPICAL ROOF FRAMING, 3/4" T&G PLYWOOD SHEATHING OVER SOLID SAWN JOIST, FOR JOIST SIZE AND SPACING, SEE PLAN
5. INDICATES PLYWOOD SHEAR WALL TYPE, SEE SCHEDULE 2/S4.01 WITH HOLDOWN EACH END, SEE DETIAL AND SCHEDULE ON 5/S4.01

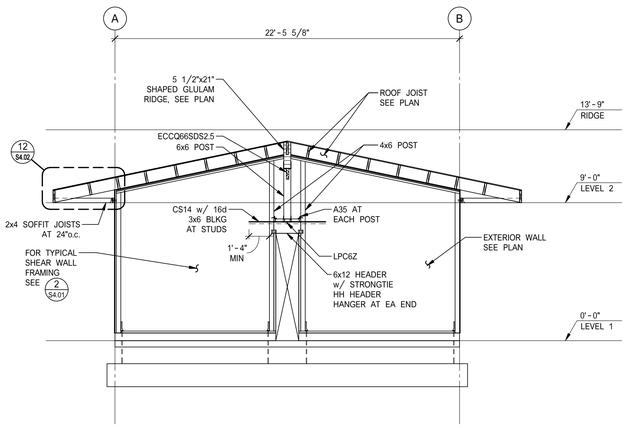

EXTERIOR WALLS - SOUTH ELEVATION

SCALE: 1/4" = 1'-0" | KPFF | **3** | S2.01

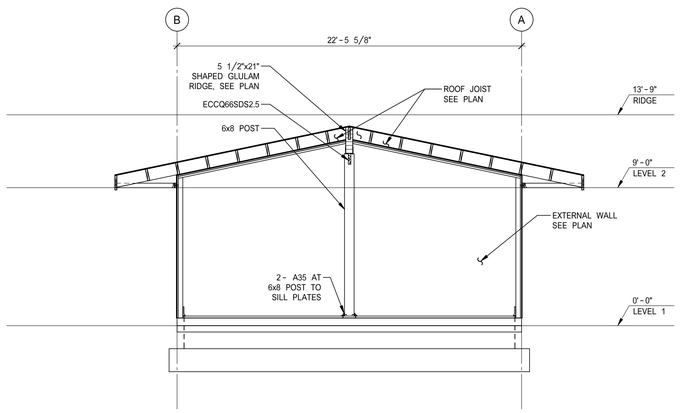

EXTERIOR WALLS - NORTH ELEVATION

SCALE: 1/4" = 1'-0" | KPFF | **4** | S2.01

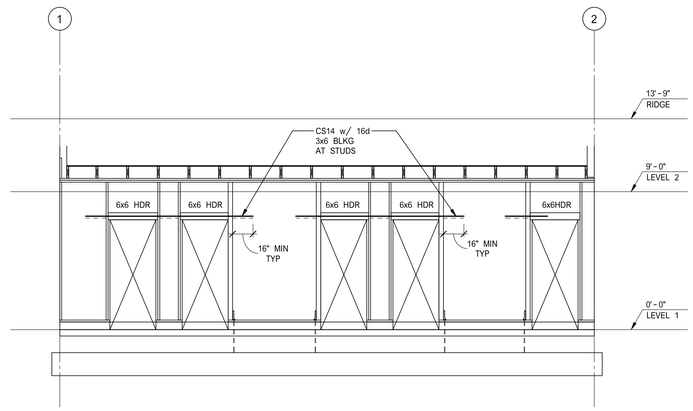

EXTERIOR WALLS - EAST/WEST ELEVATION

SCALE: 1/4" = 1'-0" | KPFF | **5** | S2.01

IDENTIFICATION STAMP
DIV. OF THE STATE ARCHITECT
APP: 01-120592 INC:
REVIEWED FOR
SS ☑ FLS ☑ ACS ☑
DATE: 7/11/2023

OWNER: San Rafel City Schools

PROJECT NAME: Venetia Valley School Middle School Restroom Addition

CLIENT ADDRESS: 617 N. JACKSON AVE. SAN JOSE, CA 95133

REGISTERED PROFESSIONAL ENGINEER
DAVID J. KOCH
No. 4727
STRUCTURAL
STATE OF CALIFORNIA

12 MAY 2023
DATE SIGNED

REVISIONS:

	DESCRIPTION	DATE
1		
2		
3		
4		
5		
6		
7		
8		
9		
10		
11		
12		

PROJECT NO:	2200173.00
DATE ISSUED:	05-12-2023
SCALE:	As indicated

S2.01

PLANS & ELEVATIONS

kpff
45 Fremont Street, 28th floor
San Francisco, CA 94105
Tel 415.243.3700 | kpff.com
Mark Hamilton, SE
mark.hamilton@kpff.com
Mike Mc Gray, CCM, LEED AP
mike.mcgray@kpff.com

SVA ARCHITECTS
6 HUTTON CENTRE DR, SUITE 1150 SANTA ANA, CA 92707
T 949.809.3380 WWW.SVA-ARCHITECTS.COM

THIS DOCUMENT CONTAINS INFORMATION PROPRIETARY TO SVA ARCHITECTS INC. AND IS FURNISHED IN CONFIDENCE FOR THE LIMITED PURPOSE OF EVALUATION, BIDDING OR REVIEW. THIS DOCUMENT OR ITS CONTENTS MAY NOT BE USED FOR ANY OTHER PURPOSE AND MAY NOT BE REPRODUCED OR DISCLOSED TO OTHERS WITHOUT THE PRIOR WRITTEN CONSENT OF SVA ARCHITECTS INC. ALL RIGHTS RESERVED. © COPYRIGHT 2018.

CONCRETE REINF HOOKS

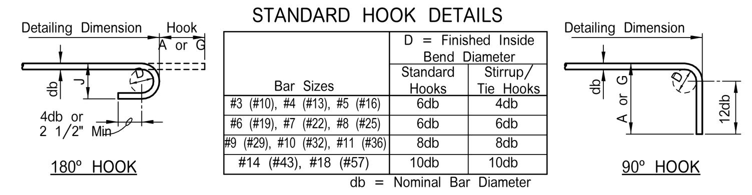

STANDARD HOOK DETAILS

Bar Sizes	D = Finished Inside Bend Diameter: Standard Hooks	Stirrup/Tie Hooks
#3 (#10), #4 (#13), #5 (#16)	6db	4db
#6 (#19), #7 (#22), #8 (#25)	6db	6db
#9 (#29), #10 (#32), #11 (#36)	8db	8db
#14 (#43), #18 (#57)	10db	10db

db = Nominal Bar Diameter

	Dimensions of standard 180 degree hooks, all grades			Dimensions of standard 90 degree hooks, all grades	
Bar Sizes	A or G	J	D	A or G	D
#3 (#10)	5"	3"	2 1/4"	6"	2 1/4"
#4 (#13)	6"	4"	3"	8"	3"
#5 (#16)	7"	5"	3 3/4"	10"	3 3/4"
#6 (#19)	8"	6"	4 1/2"	1'-0"	4 1/2"
#7 (#22)	10"	7"	5 1/4"	1'-2"	5 1/4"
#8 (#25)	11"	8"	6"	1'-4"	6"
#9 (#29)	1'-3"	11 3/4"	9 1/2"	1'-7"	9 1/2"
#10 (#32)	1'-5"	1'-1 1/4"	10 3/4"	1'-10"	10 3/4"
#11 (#36)	1'-7"	1'-2 3/4"	12"	2'-0"	12"
#14 (#43)	2'-3"	1'-9 3/4"	18 1/4"	2'-7'	18 1/4"
#18 (#57)	3'-0"	2'-4 1/2"	24"	3'-5"	24"

(#10) INDICATES METRIC BAR SIZE
D = Bend diameter

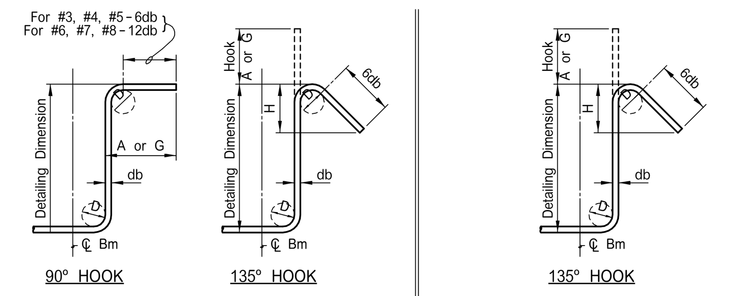

Stirrup Hooks (Tie Bends Similar)

Bar Size	D	90° A or G	135° A or G	Approx H
#3 (#10)	1 1/2"	4"	4"	2 1/2"
#4 (#13)	2"	4 1/2"	4 1/2"	3"
#5 (#16)	2 1/2"	6"	5 1/2"	3 3/4"
#6 (#19)	4 1/2"	1'-0"	7 3/4"	4 1/2"
#7 (#22)	5 1/4"	1'-2"	9"	5 1/4"
#8 (#25)	6"	1'-4"	10 1/4"	6"

Seismic Stirrup/Tie

Size	D	135° Seismic Hook A or G	Approx H
#3 (#10)	1 1/2"	4 1/4"	3"
#4 (#13)	2"	4 1/2"	3"
#5 (#16)	2 1/2"	5 1/2"	3 3/4"
#6 (#19)	4 1/2"	7 3/4"	4 1/2"
#7 (#22)	5 1/4"	9"	5 1/4"
#8 (#25)	6"	10 1/4"	6"

MAXIMUM BAR OFFSET

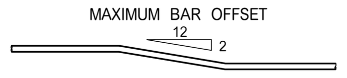

SCALE: NONE | 1 | KPFF | S3.01

PIPE AT MAT SLAB

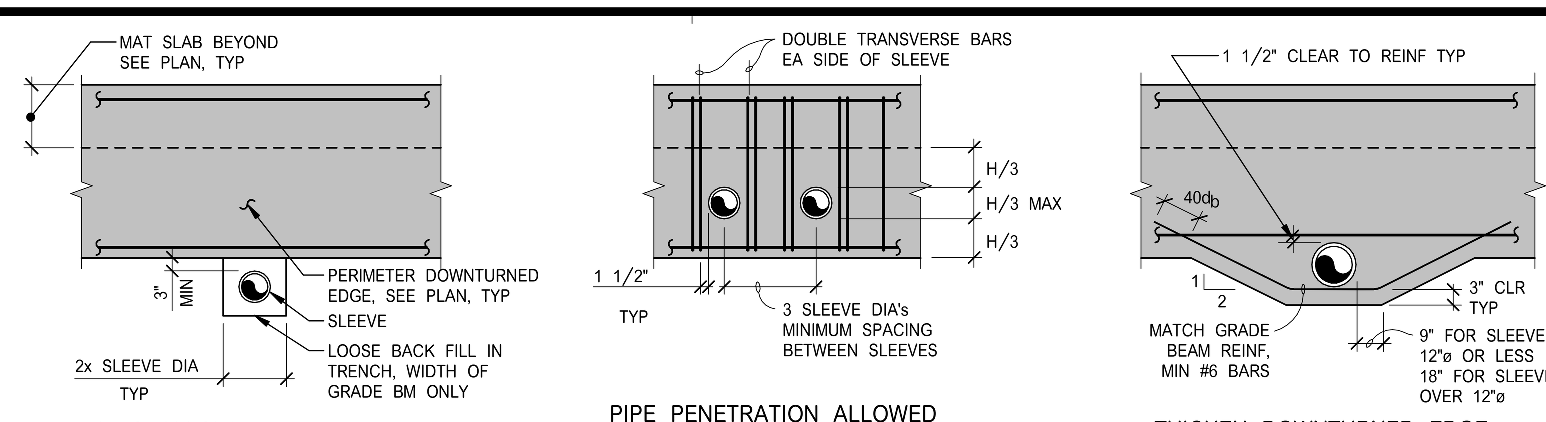

PIPES ALLOWED BELOW AS SHOWN ABOVE (A)

1.) DO NOT CUT OR INTERRUPT REINF

2.) MAX OUTER DIAMETER FOR SLEEVES IS H/3

3.) FOR SIZE AND LOCATION OF PIPES S.P.D., S.E.D., S.A.D., S.M.D.

PIPE PENETRATION ALLOWED WITHIN MIDDLE THIRD OF DOWNTURNED EDGE (B)

4.) LENGTH OF SLEEVE=WIDTH OF DOWNTURNED EDGE
5.) FOR PIPES PARALLEL TO DOWNTURNED EDGE, SEE DETAIL 3/S3.01

6.) PIPES SHALL NOT RUN HORIZONTAL WITHIN MAT SLAB

THICKEN DOWNTURNED EDGE WHERE REINF COVER REDUCED (C)

= PIPE WITHOUT SLEEVE

= PIPE WITH SCHED 40 SLEEVE 1" CLEAR ALL AROUND

TYPICAL PIPES AND SLEEVES THRU PERIMETER DOWNTURNED EDGE

SCALE: NONE | 2 | KPFF K1083 | S3.01

PIPE TRENCH AT FOOTING

NOTE: DETAILS ALSO APPLY TO ELECTRICAL CONDUITS LARGER THAN 3"ø

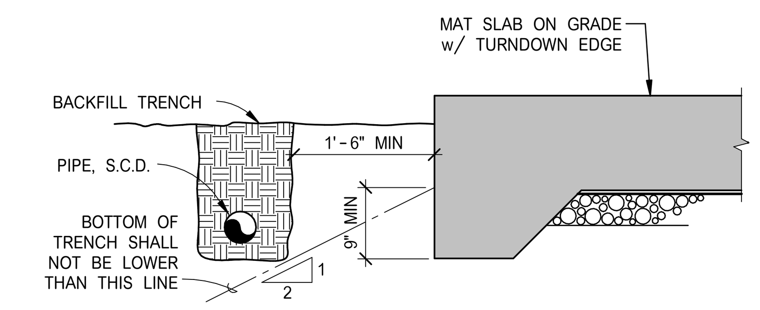

PIPES RUNNING PARALLEL TO FOOTING

SCALE: NONE | 3 | KPFF | S3.01

CURBS ON SLAB

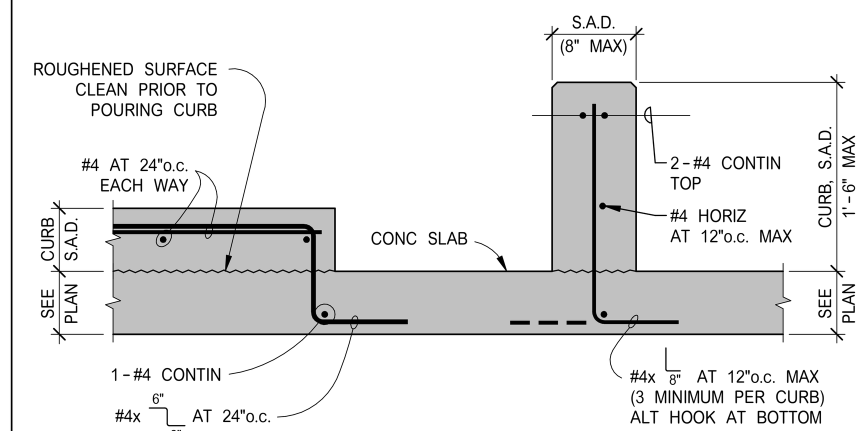

SCALE: NONE | 4 | KPFF | S3.01

PIPE AT (E) SLAB ON GRADE

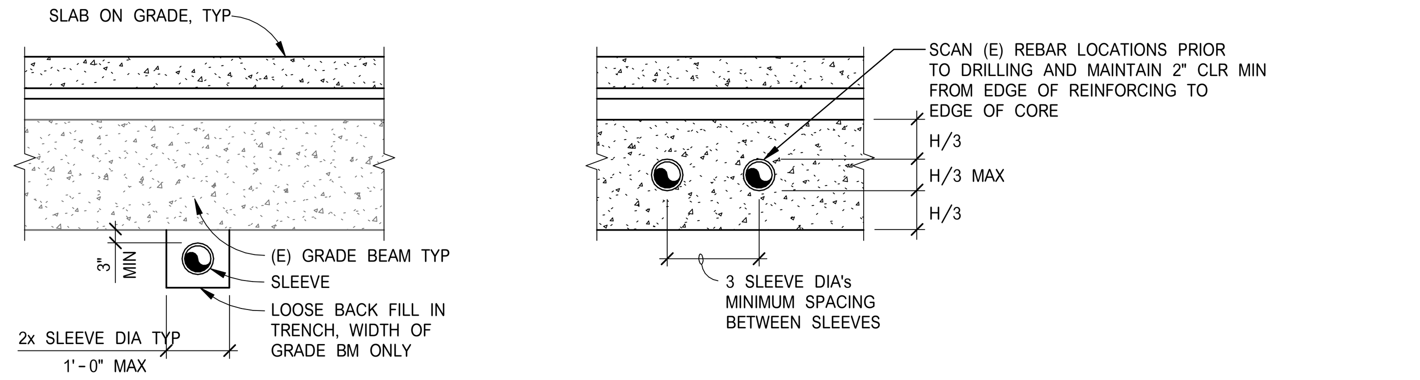

PIPES ALLOWED ABOVE OR BELOW AS SHOWN ABOVE (A)

1.) DO NOT CUT OR INTERRUPT G.B. REINF

2.) MAX OUTER DIAMETER FOR SLEEVES IS H/3

3.) FOR SIZE AND LOCATION OF PIPES S.P.D., S.E.D., S.A.D., S.M.D.

PIPE PENETRATION ALLOWED WITHIN MIDDLE THIRD OF G.B. (B)

4.) LENGTH OF SLEEVE=WIDTH OF G.B.

5.) FOR PIPES PARALLEL TO GRADE BEAMS, SEE DETAIL

= PIPE WITHOUT SLEEVE

= PIPE WITH SCHED 40 SLEEVE 1" CLEAR ALL AROUND

TYPICAL PIPES AND SLEEVES THRU GRADE BEAMS/FOOTINGS

SCALE: 1/2" = 1'-0" | 5 | KPFF | S3.01

CONCRETE REINF SCHEDULE

BAR SIZE	TOP REINFORCEMENT: DEVELOPMENT LENGTH (l_d)	TOP REINFORCEMENT: SPLICE LENGTH (l_s)	OTHER REINFORCEMENT: DEVELOPMENT LENGTH (l_d)	OTHER REINFORCEMENT: SPLICE LENGTH (l_s)
#4	2'-2"	2'-10"	1'-7"	2'-1"
#5	2'-8"	3'-6"	2'-0"	2'-7"
#6	3'-3"	4'-2"	2'-5"	3'-1"
#7	4'-6"	5'-10"	3'-6"	4'-6"

1. USE SPLICE LENGTH (l_s) INDICATED ON TABLE FOR ALL DOWEL LENGTHS NOT SHOWN ON PLANS UNLESS OTHERWISE PERMITTED BY ENGINEER.
2. DEVELOPMENT LENGTHS (l_d) AND SPLICE LENGTHS (l_s) SHOWN IN THE SCHEDULE ABOVE ARE IN ACCORDANCE WITH THE 2016 CBC AND CORRESPOND TO GRADE 60 BARS EMBEDDED IN NORMAL WEIGHT CONCRETE (f'c=4000 PSI OR GREATER) FOR CONCRETE WITH f'c=3000 PSI MULTIPLY VALUES IN TABLE BY 1.16. FOR LT WT AGGREGATE CONCRETE, MULTIPLY VALUES IN TABLE BY 1.3. THESE MULTIPLIERS ARE CUMULATIVE.
3. THIS SCHEDULE SHALL BE USED WHERE DEVELOPMENT AND SPLICE LENGTHS ARE NOT SPECIFICALLY DETAILED AND DIMENSIONED ON THE DRAWINGS.
4. THE SCHEDULE ABOVE IS APPLICABLE FOR THE FOLLOWING CONDITIONS:
   a) CLEAR SPACING OF BARS BEING DEVELOPED OR SPLICED NOT LESS THAN d_b, CLEAR COVER NOT LESS THAN d_b, AND STIRRUPS OR TIES THROUGHOUT l_d NOT LESS THAN THE CODE MINIMUM. OR
   b) CLEAR SPACING OF BARS BEING DEVELOPED OR SPLICED NOT LESS THAN $2d_b$, AND CLEAR COVER NOT LESS THAN d_b.
5. "TOP" REINFORCEMENT IS DEFINED AS HORIZONTAL REINFORCEMENT SO PLACED THAT MORE THAN 12" OF FRESH CONCRETE IS CAST IN THE MEMBER BELOW THE DEVELOPMENT OR SPLICE LENGTH. "OTHER" REINFORCEMENT INCLUDES ALL VERTICAL BARS AND HORIZONTAL BARS WITH LESS THAN 12" OF CONCRETE CAST BELOW BAR.
6. WHERE BARS OF DIFFERENT SIZE ARE LAP SPLICED, SPLICE LENGTH SHALL BE THE LARGER OF DEVELOPMENT LENGTH OF LARGER BAR, OR SPLICE LENGTH OF SMALLER BAR.

SCALE: NONE | 6 | KPFF K0000 | S3.01

FOOTING REINF

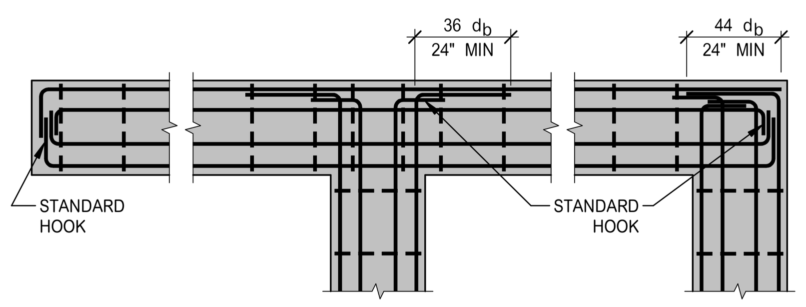

END CONDITION INTERSECTION CORNER

NOTE:
REINFORCEMENT SHOWN ON FOUNDATION DETAILS AND OTHER SPECIFICALLY REFERENCED DETAILS TAKE PRECEDENCE OVER REINFORCEMENT SHOWN HERE

SCALE: 3/4" = 1'-0" | 7 | KPFF | S3.01

STEPPED FOOTING DETAIL

NOTES:
D = DEPTH OF FTG
S_H = STEP HEIGHT 1'-6" MAX
S_L = STEP LENGTH 2.0xS_H, MIN

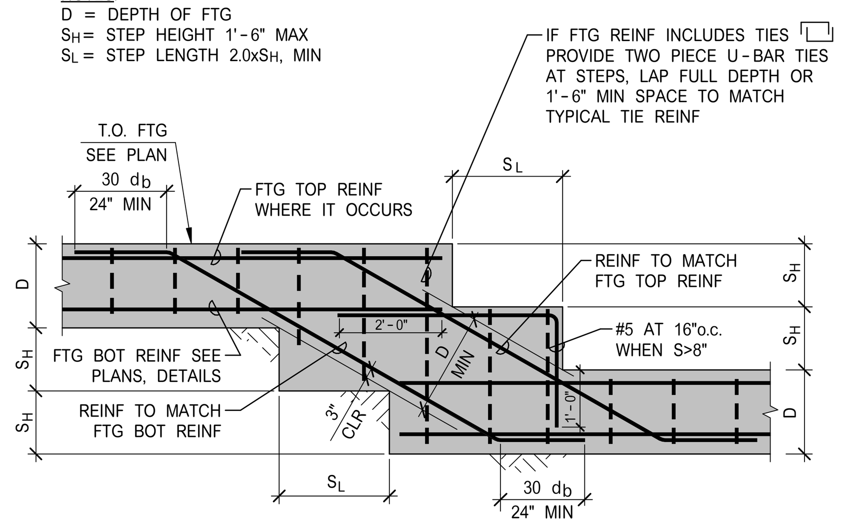

SCALE: 3/4" = 1'-0" | 8 | KPFF | S3.01

SECTION

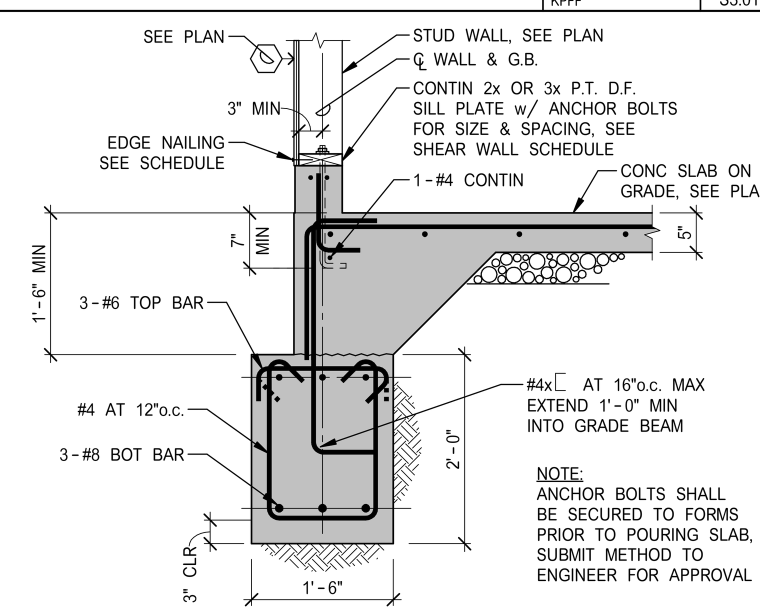

NOTE:
ANCHOR BOLTS SHALL BE SECURED TO FORMS PRIOR TO POURING SLAB, SUBMIT METHOD TO ENGINEER FOR APPROVAL

TYPICAL EXTERIOR SHEAR WALL

SCALE: 3/4" = 1'-0" | 9 | KPFF | S3.01

SECTION

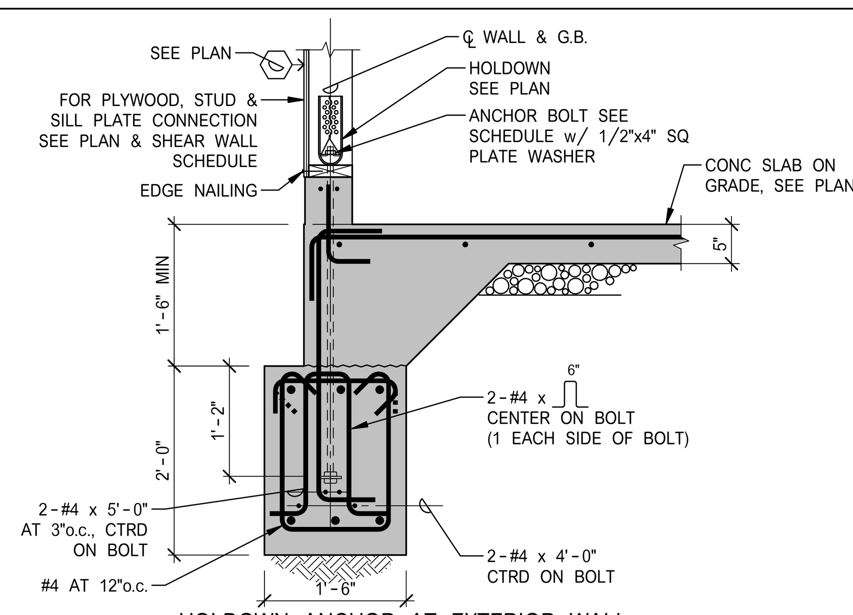

HOLDOWN ANCHOR AT EXTERIOR WALL

SCALE: 3/4" = 1'-0" | 10 | KPFF | S3.01

NOT USED

SCALE: NONE | 11 | KPFF | S3.01

SECTION

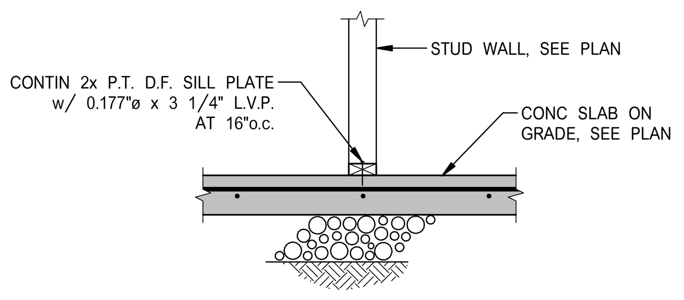

TYPICAL INTERIOR NON-BEARING WALL

SCALE: 3/4" = 1'-0" | 12 | KPFF | S3.01

SLAB ON GRADE

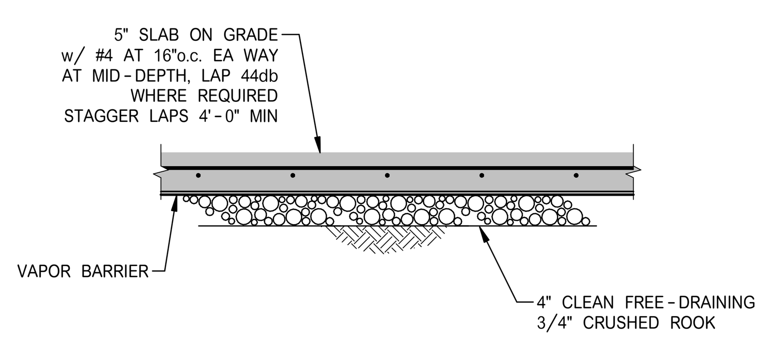

NOTE:
REFER TO THE GEOTECHNICAL REPORT FOR ADDTIONAL INFORMATION ON SUB-GRADE PREPARATION AND SLAB ON GRADE CONSTRUCTION.

SCALE: 3/4" = 1'-0" | 13 | KPFF | S3.01

EQUIPMENT PAD

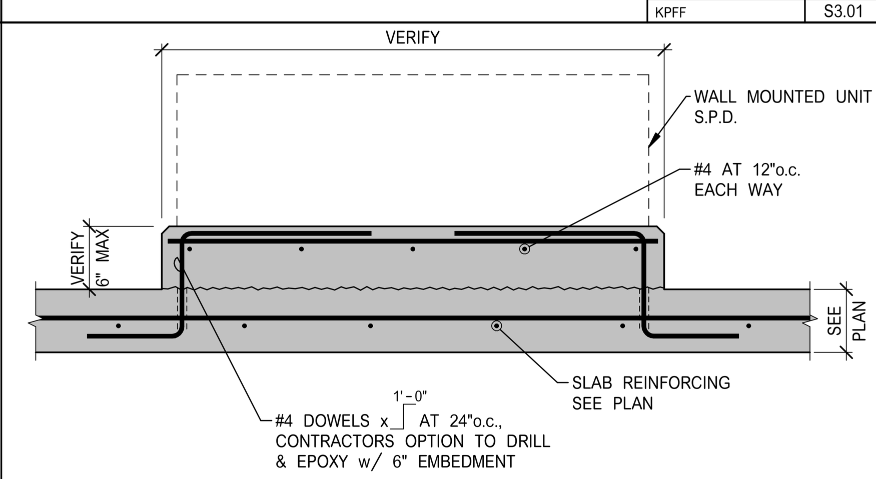

NOTES:
1. SEE ARCHITECTURAL, MECHANICAL, ELECTRICAL, & PLUMBING DRAWINGS FOR LOCATION AND SIZE OF HOUSEKEEPING PADS
2. IF DRILL & EPOXY DOWELS ARE USED LOCATE SLAB REINFORCEMENT AND DO NOT DAMAGE

TYPICAL HOUSEKEEPING PAD

SCALE: 3/4" = 1'-0" | 14 | KPFF TYP | S3.01

IDENTIFICATION STAMP
DIV. OF THE STATE ARCHITECT
APP: 01-120592 INC:
REVIEWED FOR
SS ☑ FLS ☑ ACS ☑
DATE: 7/11/2023

OWNER: San Rafel City Schools

PROJECT NAME: Venetia Valley School Middle School Restroom Addition

CLIENT ADDRESS: 617 N. JACKSON AVE. SAN JOSE, CA 95133

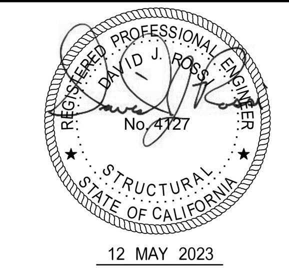

12 MAY 2023
DATE SIGNED

REVISIONS:

	DESCRIPTION	DATE
△		
△		
△		
△		
△		
△		
△		
△		
△		
△		
△		

PROJECT NO: 2200173.00

DATE ISSUED: 05-12-2023

SCALE: As indicated

S3.01

TYPICAL CONCRETE DETAILS

kpff
45 Fremont Street, 28th floor

ARCHITECTS
6 HUTTON CENTRE DR, SUITE 1150 SANTA ANA, CA 92707
T 949.809.3380 WWW.SVA-ARCHITECTS.COM

THIS DOCUMENT CONTAINS INFORMATION PROPRIETARY TO SVA ARCHITECTS INC. AND IS FURNISHED IN CONFIDENCE FOR THE LIMITED PURPOSE OF EVALUATION, BIDDING OR REVIEW. THIS DOCUMENT OR ITS CONTENTS MAY NOT BE USED FOR ANY OTHER PURPOSE AND MAY NOT BE REPRODUCED OR DISCLOSED TO OTHERS WITHOUT THE PRIOR WRITTEN CONSENT OF SVA ARCHITECTS INC. ALL RIGHTS RESERVED, © COPYRIGHT 2018.

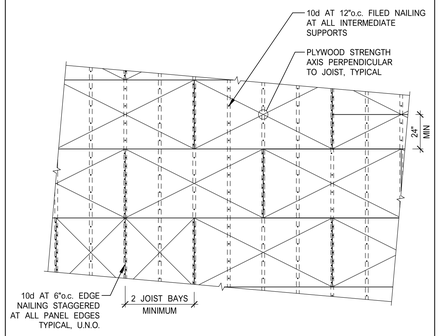

NOTES:

1. MINIMUM PLYWOOD WIDTH IS 24".
2. PLYWOOD SHALL BE CONTINUOUS OVER 2 JOISTS BAYS, MINIMUM.
3. NAILS SHALL BE DRIVEN TIGHT TO TOP OF PLYWOOD SURFACE AND IN NO CASE SHALL NAILS PENETRATE THE TOP PLY MORE THAN COMMONLY EXPECTED WITH HAMMER DRIVEN NAILS. NAILS OVERDRIVEN ARE SUBJECT FOR REJECTION AND MAY RESULT IN REMOVAL OF THE PLYWOOD AND LUMBER FRAMING TO WHICH IT IS FASTENED. ACCEPTANCE IS AT THE DISCRETION OF THE PROJECT ENGINEER AND SPECIAL INSPECTOR.

PLYWOOD ROOF SHEATHING — SCALE: 3/4" = 1'-0" — KPFF TYP — 1 / S4.01

ROOF CONDITION

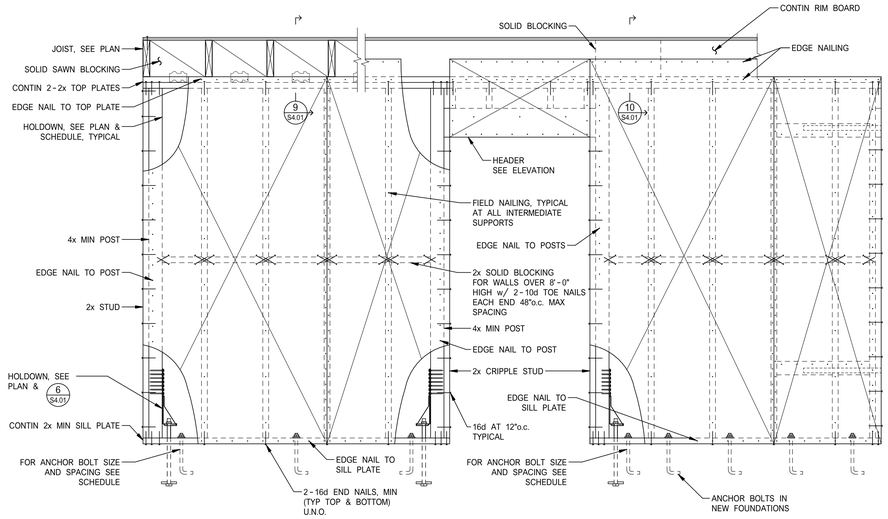

NOTES:

1. 24" MINIMUM PLYWOOD OR OSB SHEET WIDTH
2. 12" MINIMUM PLYWOOD OR OSB SHEET HEIGHT
3. EDGE NAIL ALL PANEL EDGES

TYPE	OSB/PLY(4) SHEATHING	EDGE(2) NAILING	JOISTS/BLOCKS(4) TO TOP PLATE	SILL BOLTS TO (N) CONC	ALLOW SHEAR
		COMMON NAILS	SIMPSON FRAMING ANCHOR		PLF
A	1/2" CDX	10d AT 6"	A35 AT 16" OR LTP4 AT 16"	5/8"ø AT 48"	310
B	1/2" CDX	10d AT 3"	A35 AT 12" OR LTP4 AT 12"	5/8"ø AT 32"	600

NOTES:

1) FOR SHEAR WALL ELEVATION, SEE
2) AT ALL ANCHOR BOLT LOCATIONS, PROVIDE SIMPSON BP5/8 BEARING PLATES, SEE 4 S4.01
3) ALL FASTENERS IN CONTACT WITH PRESSURE TREATED SILL PLATES SHALL BE GALVANIZED.
4) PROVIDE 3/8" MINIMUM EDGE DISTANCE AT EDGE NAILING.
5) FRAMING MEMBERS RECEIVING EDGE NAILING FROM ABUTTING PANELS SHALL NOT BE LESS THAN A SINGLE 3" NOMINAL MEMBER. NAILS SHALL BE STAGGERED
6) SPACE NAILS AT 12"o.c. ALONG ALL INTERMEDIATE FRAMING MEMBERS.
7) PREDRILL NAIL & SCREW HOLES TO PREVENT SPLITTING OF FRAMING AS REQUIRED AND STAGGER FASTENERS.

TYPICAL SHEAR WALL FRAMING ELEVATION — SCALE: 3/4" = 1'-0" — KPFF — 2 / S4.01

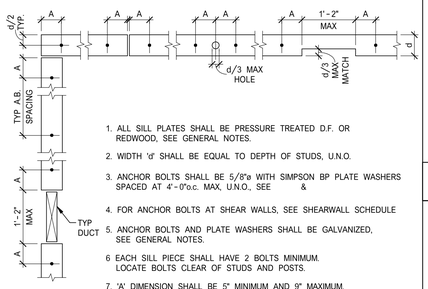

1. ALL SILL PLATES SHALL BE PRESSURE TREATED D.F. OR REDWOOD, SEE GENERAL NOTES.
2. WIDTH 'd' SHALL BE EQUAL TO DEPTH OF STUDS, U.N.O.
3. ANCHOR BOLTS SHALL BE 5/8"ø WITH SIMPSON BP PLATE WASHERS SPACED AT 4'-0"o.c. MAX, U.N.O., SEE &
4. FOR ANCHOR BOLTS AT SHEAR WALLS, SEE SHEARWALL SCHEDULE
5. ANCHOR BOLTS AND PLATE WASHERS SHALL BE GALVANIZED, SEE GENERAL NOTES.
6 EACH SILL PIECE SHALL HAVE 2 BOLTS MINIMUM. LOCATE BOLTS CLEAR OF STUDS AND POSTS.
7. 'A' DIMENSION SHALL BE 5" MINIMUM AND 9" MAXIMUM.

ANCHOR BOLT AND SILL PLATE AT EXTERIOR WALLS

DETAIL — SCALE: 3/4" = 1'-0" — KPFF — 3 / S4.01

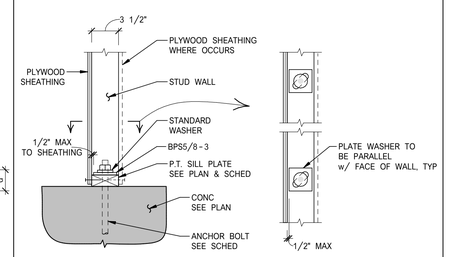

DETAIL — SCALE: 1 1/2" = 1'-0" — KPFF — 4 / S4.01

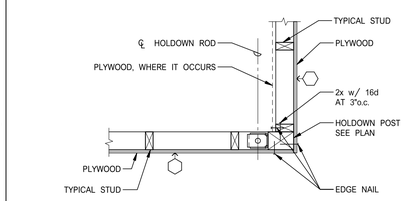

TYPICAL CORNER INSTALLATION

PLAN DETAIL — SCALE: 1" = 1'-0" — KPFF — 5 / S4.01

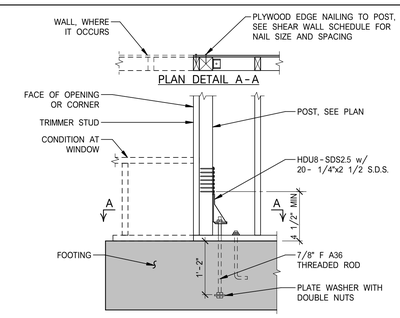

PLAN DETAIL A-A

DETAIL — SCALE: 3/4" = 1'-0" — KPFF — 6 / S4.01

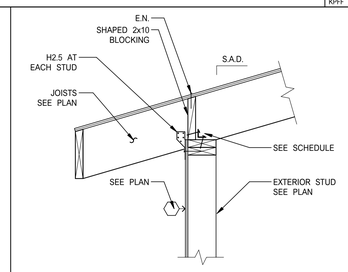

SECTION — SCALE: 1" = 1'-0" — KPFF — 7 / S4.01

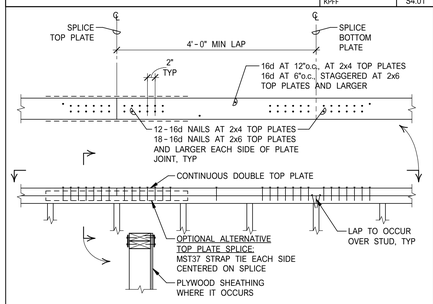

SECTION

WALL TOP PLATE LAP — SCALE: 3/4" = 1'-0" — KPFF — 8 / S4.01

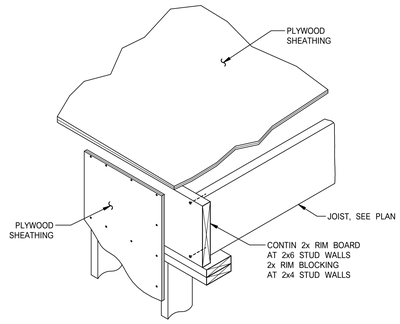

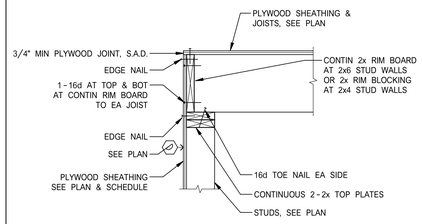

EXTERIOR SHEAR WALL - JOIST PERPENDICULAR

SECTION — SCALE: 1" = 1'-0" — KPFF TYP — 9 / S4.01

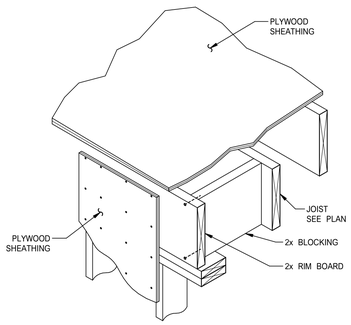

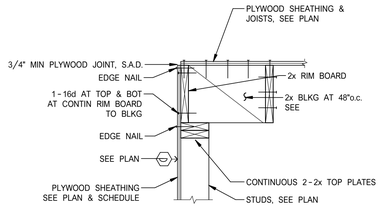

EXTERIOR SHEAR WALL - JOIST PARALLEL

SECTION — SCALE: 1" = 1'-0" — KPFF TYP — 10 / S4.01

IDENTIFICATION STAMP
DIV. OF THE STATE ARCHITECT
APP: 01-120592 INC:
REVIEWED FOR
SS ☑ FLS ☑ ACS ☑
DATE: 7/11/2023

OWNER: San Rafel City Schools

PROJECT NAME: Venetia Valley School Middle School Restroom Addition

CLIENT ADDRESS: 617 N. JACKSON AVE. SAN JOSE, CA 95133

REGISTERED PROFESSIONAL ENGINEER — DAVID J. KOMPS — No. 4727 — STRUCTURAL — STATE OF CALIFORNIA

12 MAY 2023
DATE SIGNED

REVISIONS:

	DESCRIPTION	DATE
1		
2		
3		
4		
5		
6		
7		
8		
9		
10		
11		
12		

PROJECT NO:	2200173.00
DATE ISSUED:	05-12-2023
SCALE:	As indicated

S4.01

SHEAR WALL FRAMING

kpff
45 Fremont Street, 28th floor
[redacted]

SVA ARCHITECTS
6 HUTTON CENTRE DR, SUITE 1150 SANTA ANA, CA 92707
T 949.809.3380 WWW.SVA-ARCHITECTS.COM

THIS DOCUMENT CONTAINS INFORMATION PROPRIETARY TO SVA ARCHITECTS INC, AND IS FURNISHED IN CONFIDENCE FOR THE LIMITED PURPOSE OF EVALUATION, BIDDING OR REVIEW. THIS DOCUMENT OR ITS CONTENTS MAY NOT BE USED FOR ANY OTHER PURPOSE AND MAY NOT BE REPRODUCED OR DISCLOSED TO OTHERS WITHOUT THE PRIOR WRITTEN CONSENT OF SVA ARCHITECTS INC. ALL RIGHTS RESERVED. © COPYRIGHT 2018.

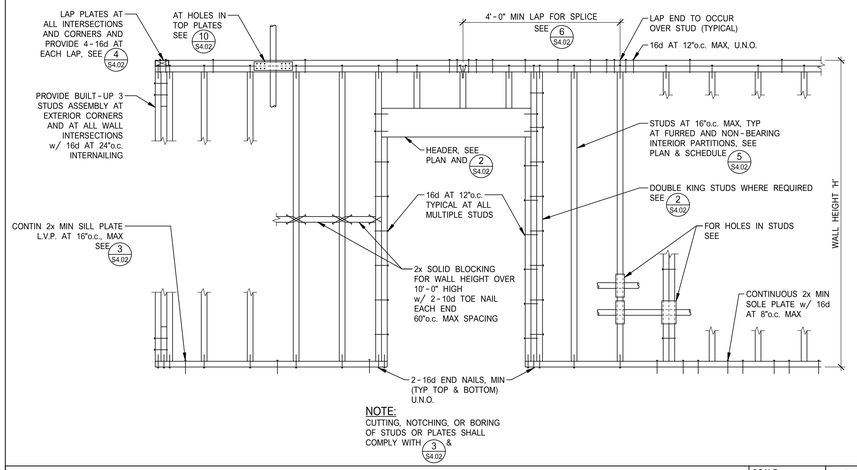

NOTE:
CUTTING, NOTCHING, OR BORING OF STUDS OR PLATES SHALL COMPLY WITH 3 S4.02 &

TYPICAL WALL FRAMING DETAILS - NON-BEARING WALLS

SCALE: NONE | KPFF | K0000 | S4.02 | **1**

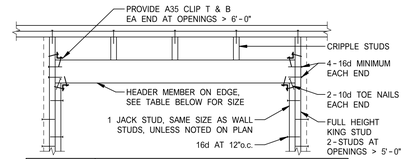

WIDTH OF OPENING	STUD SIZE	
	2x4	2x6 or 3x6
3'-0" MAX	2-2x4 or 4x4	3-2x4 or 6x6
5'-0" MAX	2-2x6 or 4x6	3-2x6 or 6x6
8'-0" MAX	2-2x8 or 4x8	3-2x8 or 6x8
OVER 8'-0"	SEE PLAN AND SPECIFIC DETAILS	

NOTE: HEADERS NOTED IN TABLE SHALL BE PROVIDED OVER ALL WINDOW, DOOR, AND OTHER OPENINGS, UNLESS NOTED OTHERWISE ON PLANS AND SPECIFIC DETAILS. A FULL DEPTH HEADER MAY BE USED IN LIEU OF THE HEADERS NOTED IN THE TABLE. IF A FULL DEPTH HEADER IS USED, THE CRIPPLE STUDS MAY BE OMITTED.

HEADER SCHEDULE

SCALE: 3/4" = 1'-0" | KPFF | S4.02 | **2**

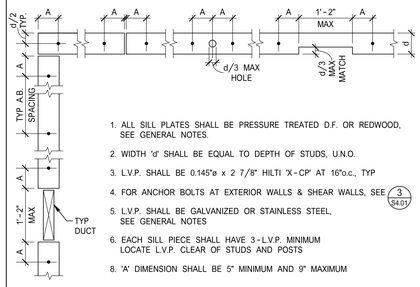

1. ALL SILL PLATES SHALL BE PRESSURE TREATED D.F. OR REDWOOD, SEE GENERAL NOTES.
2. WIDTH 'd' SHALL BE EQUAL TO DEPTH OF STUDS, U.N.O.
3. L.V.P. SHALL BE 0.145"ø x 2 7/8" HILTI 'X-CP' AT 16"o.c., TYP
4. FOR ANCHOR BOLTS AT EXTERIOR WALLS & SHEAR WALLS, SEE 3 S4.01
5. L.V.P. SHALL BE GALVANIZED OR STAINLESS STEEL, SEE GENERAL NOTES
6. EACH SILL PIECE SHALL HAVE 3-L.V.P. MINIMUM LOCATE L.V.P. CLEAR OF STUDS AND POSTS
8. 'A' DIMENSION SHALL BE 5" MINIMUM AND 9" MAXIMUM

L.V.P. AND SILL PLATE AT INTERIOR NON-BEARING & PARTITION WALLS

DETAIL

SCALE: NONE | KPFF | S4.02 | **3**

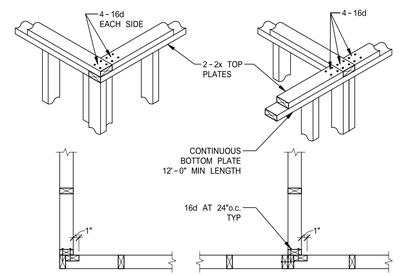

STUD WALL INTERSECTION

SCALE: NONE | KPFF | S4.02 | **4**

STUD WALL SCHEDULE - INTERIOR NON-BEARING PARTITION WALL		
MAX HEIGHT 'H'	INTERIOR WALL STUD SPACING U.N.O.	MINIMUM TIMBER GRADE
H ≤ 12'-3"	2x4 AT 16"o.c.	STUD
H ≤ 16'-0"	2x6 AT 16"o.c.	STUD

NOTE:
1. FOR JACK STUDS AND KING STUDS, SEE HEADER SCHEDULE.

INTERIOR NON-BEARING PARTITION WALL

STUD WALL SCHEDULE

SCALE: NONE | KPFF | S4.02 | **5**

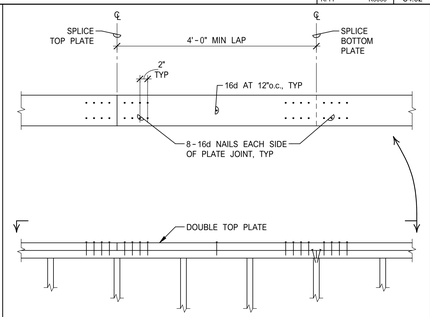

WALL TOP PLATE LAP

SCALE: NONE | KPFF | S4.02 | **6**

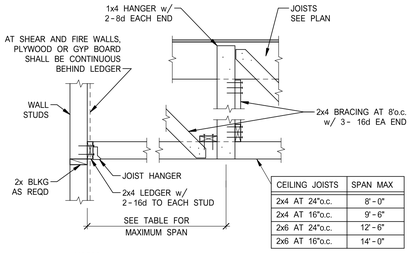

CEILING JOISTS	SPAN MAX
2x4 AT 24"o.c.	8'-0"
2x4 AT 16"o.c.	9'-6"
2x6 AT 24"o.c.	12'-6"
2x6 AT 16"o.c.	14'-0"

NOTES:
1. FOR SPANS GREATER THAN 14'-0", USE HUNG CEILING DETAILS.
2. DO NOT SUPPORT MECHANICAL EQUIPMENT ON CEILING JOISTS, PROVIDE HANGERS TO STRUCTURE ABOVE.

SUSPENDED WOOD CEILING

SCALE: 3/4" = 1'-0" | KPFF | S4.02 | **7**

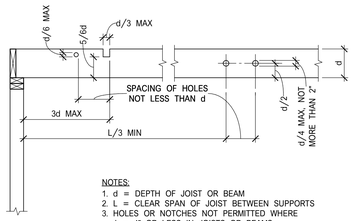

NOTES:
1. d = DEPTH OF JOIST OR BEAM
2. L = CLEAR SPAN OF JOIST BETWEEN SUPPORTS
3. HOLES OR NOTCHES NOT PERMITTED WHERE d = 4" OR LESS IN JOISTS OR BEAMS.

ALLOWABLE IN SOLID SAWN JOISTS OR BEAMS

SOLID SAWN HOLES

SCALE: 3/4" = 1'-0" | KPFF | S4.02 | **8**

NOTES:
1. NO NOTCHING PERMITTED IN STUDS
2. ALL HOLES SHALL BE DRILLED w/ A HOLE SAW

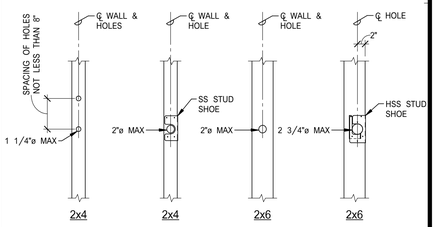

ALLOWABLE HOLES IN STUDS

DETAIL

SCALE: NONE | KPFF | S4.02 | **9**

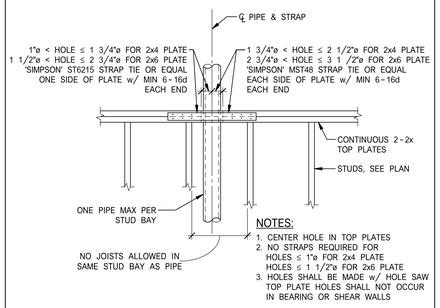

NOTES:
1. CENTER HOLE IN TOP PLATES
2. NO STRAPS REQUIRED FOR HOLES ≤ 1"ø FOR 2x4 PLATE
   HOLES ≤ 1 1/2"ø FOR 2x6 PLATE
3. HOLES SHALL BE MADE w/ HOLE SAW TOP PLATE HOLES SHALL NOT OCCUR IN BEARING OR SHEAR WALLS

TOP PLATE STRAP AT PIPE

SCALE: 3/4" = 1'-0" | KPFF | S4.02 | **10**

	SIMPSON DESIGNATIONS	
SIZE	TOP FLANGE	FACE MOUNTED
2xd	HUd2d-TF	LUS2d
2-2xd	HUd2d-2TF	LUS2d-2

NOTES:
1. INSTALL PER MANUFACTURER'S INSTRUCTIONS. FILL ALL HOLES WITH FASTENERS SPECIFIED FOR MAXIMUM LOADS.
2. 'd' IS MEMBER DEPTH
3. USE SKEWED OR SLOPED HANGERS AS REQUIRED.
4. HANGERS ARE TYPICAL U.N.O. IN DRAWINGS.

HANGER SCHEDULE-SOLID SAWN

SCALE: 3/4" = 1'-0" | KPFF | S4.02 | **11**

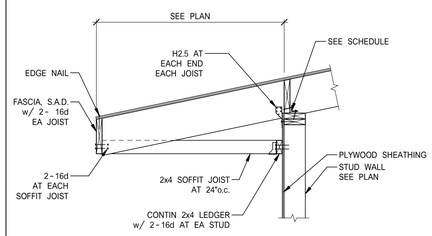

SOFFIT DETAIL

SCALE: 3/4" = 1'-0" | KPFF | S4.02 | **12**

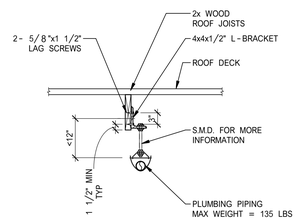

PLUMBING PIPE SUPPORT DETAIL

SCALE: 3/4" = 1'-0" | KPFF | S4.02 | **13**

IDENTIFICATION STAMP
DIV. OF THE STATE ARCHITECT
APP: 01-120592 INC:
REVIEWED FOR
SS ☑ FLS ☑ ACS ☑
DATE: 7/11/2023

OWNER: San Rafel City Schools

PROJECT NAME: Venetia Valley School Middle School Restroom Addition

CLIENT ADDRESS: 617 N. JACKSON AVE. SAN JOSE, CA 95133

REGISTERED PROFESSIONAL ENGINEER
DAVID J. KOMPS
No. 47127
STRUCTURAL
STATE OF CALIFORNIA

12 MAY 2023
DATE SIGNED

REVISIONS:

	DESCRIPTION	DATE
△		
△		
△		
△		
△		
△		
△		
△		
△		
△		
△		

PROJECT NO:	2200173.00
DATE ISSUED:	05-12-2023
SCALE:	3/4" = 1'-0"

S4.02

WOOD FRAMING DETAILS

kpff
45 Fremont Street, 28th floor
[redacted]
SVA ARCHITECTS
6 HUTTON CENTRE DR. SUITE 1150 SANTA ANA, CA 92707
T 949.809.3380 WWW.SVA-ARCHITECTS.COM

THIS DOCUMENT CONTAINS INFORMATION PROPRIETARY TO SVA ARCHITECTS INC. AND IS FURNISHED IN CONFIDENCE FOR THE LIMITED PURPOSE OF EVALUATION, BIDDING OR REVIEW. THIS DOCUMENT OR ITS CONTENTS MAY NOT BE USED FOR ANY OTHER PURPOSE AND MAY NOT BE REPRODUCED OR DISCLOSED TO OTHERS WITHOUT THE PRIOR WRITTEN CONSENT OF SVA ARCHITECTS INC. ALL RIGHTS RESERVED. © COPYRIGHT 2018.

ABBREVIATIONS

A/C	AIR CONDITIONING	HWP	HEATING WATER PUMP
ABV	ABOVE	HWR	HEATING WATER RETURN
ACCEPT	ACCEPTANCE	HWS	HEATING WATER SUPPLY
ACU	AIR CONDITIONING UNIT	HX	HEAT EXCHANGER
AD	ACCESS DOOR	ID	INSIDE DIAMETER
ADA	AMERICANS WITH DISABILITIES ACT	IE	INVERT ELEVATION
ADD	ADDITION	IN	INCH
AFF	ABOVE FINISH FLOOR	IW	INDUSTRIAL WASTE
AHJ	AUTHORITY HAVING JURISDICTION	L	LENGTH
AHU	AIR HANDLING UNIT	LBS	POUNDS
AP	ACCESS PANEL	LP	LOW PRESSURE
APPROX	APPROXIMATE	LPC	LOW PRESSURE CONDENSATE
ARCH	ARCHITECTURAL	LPS	LOW PRESSURE STEAM
ARI	AMERICAN REFRIGERATION INSTITUTE	M	MOTOR
AS	AIR SEPARATOR	MA	MIXED AIR
ASTM	AMERICAN SOCIETY FOR TESTING AND MATERIALS	MAU	MAKEUP AIR
AUTO	AUTOMATIC	MAX	MAXIMUM
AUX	AUXILIARY	MC	MECHANICAL CONTRACTOR
AV	AIR VENT	MCC	MOTOR CONTROL CENTER
B	BOILER	MECH	MECHANICAL
BAS	BUILDING AUTOMATION SYSTEM	MIN	MINIMUM
BDD	BACKDRAFT DAMPER	MPC	MEDIUM PRESSURE CONDENSATE
BFF	BELOW FINISH FLOOR	MPS	MEDIUM PRESSURE STEAM
BLDG	BUILDING	MV	MANUAL AIR VENT
BOD	BOTTOM OF DUCT	(N)	NEW
BOP	BOTTOM OF PIPE	N/A	NOT APPLICABLE
BSMT	BASEMENT	NC	NORMALLY CLOSED
BV	BALL VALVE	NO	NORMALLY OPENED
BYV	BUTTERFLY VALVE	NFPA	NATIONAL FIRE PROTECTION ASSOCIATION
C	COMMON, CONDENSATE OR CONDUIT	NIC	NOT IN CONTRACT
CA	CONTROL AIR, or COMBUSTION AIR	NTS	NOT TO SCALE
CAC	CALIFORNIA ADMINISTRATIVE CODE	OA	OUTSIDE AIR
CAP	CAPACITY	OBD	OPPOSED BLADE DAMPER
CAV	CONSTANT AIR VOLUME	OC	ON CENTER
CB	CHILLED BEAM	OD	OUTSIDE DIAMETER
CBC	CALIFORNIA BUILDING CODE	OFCI	OWNER FURNISHED CONTRACTOR INSTALLED
CC	COOLING COIL OR CONTROLS CONTRACTOR	OFOI	OWNER FURNISHED OWNER INSTALLED
CD	CONSTRUCTION DOCUMENTS	P	PUMP OR PRESSURE OR POLE
CEC	CALIFORNIA ELECTRICAL CODE	PC	PUMPED CONDENSATE
CFC	CALIFORNIA FIRE CODE	PCR	PRESSURIZED CONDENSATE RETURN
CFM	CUBIC FEET PER MINUTE	PD	PRESSURE DROP
CH	CHILLER	PE	PNEUMATIC ELECTRIC
CHV	CHECK VALVE	PF	PRE FILTER
CHWP	CHILLED WATER PUMP	PG	PIPE GUIDE OR PRESSURE GAUGE
CHWR	CHILLED WATER RETURN	PH	PHASE
CHWS	CHILLED WATER SUPPLY	PLBG	PLUMBING
CL	CENTERLINE	POC	POINT OF CONNECTION
CLG	CEILING	POD	POINT OF DISCONNECTION
CMC	CALIFORNIA MECHANICAL CODE	PS	PRESSURE SENSOR
CONN	CONNECTION	PSI	POUNDS PER SQUARE INCH
CP	CONTROL PANEL	PSIG	POUNDS PER SQUARE INCH - GAUGE
CPC	CALIFORNIA PLUMBING CODE	QTY	QUANTITY
CV	CONSTANT VOLUME OR CONTROL VALVE	(R)	REMOVE
CWP	CONDENSER WATER PUMP	R	RISERS, RELOCATE OR RISE
CWR	CONDENSER WATER RETURN	RA	RETURN AIR
CWS	CONDENSER WATER SUPPLY	REB	REBALANCE
D	DROP OR DRAIN	REF	RELIEF FAN
DDC	DIRECT DIGITAL CONTROL	REFRIG	REFRIGERANT
DEMO	DEMOLISH / DEMOLITION	REL	RELOCATE
DEPT	DEPARTMENT	REQ'D	REQUIRED
DET	DETAIL	REV	REVISE, REVISION OR REVOLUTIONS
DIA	DIAMETER	RF	RETURN FAN
DIFF	DIFFERENCE	RHC	REHEAT COIL
DISCH	DISCHARGE	RL	REFRIGERANT LIQUID
DN	DOWN	RM	ROOM
DTR	DOWN THRU ROOF	RS	REFRIGERANT SUCTION
DV	DIAPHRAGM VALVE	RTU	ROOFTOP UNIT
DWG	DRAWING	SA	SUPPLY AIR
DX	DIRECT EXPANSION	SAN	SANITARY
(E)	EXISTING TO REMAIN	SD	SMOKE DAMPER
EA	EXHAUST AIR OR EACH	SEN	SENSIBLE
EC	ELECTRICAL CONTRACTOR	SF	SUPPLY FAN OR SQUARE FEET
ECON	ECONOMIZER	SP	STATIC PRESSURE
EF	EXHAUST FAN	SPEC	SPECIFICATION
EL	ELEVATION	SQ FT	SQUARE FEET
ELEC	ELECTRICAL	SQ IN	SQUARE INCH
EQUIP	EQUIPMENT	ST	STRAINER OR SOUND TRAP OR STEAM TRAP
ESP	EXTERNAL STATIC PRESSURE	STD	STANDARD
ET	EXPANSION TANK	STRUC	STRUCTURAL
EXH	EXHAUST	T	THERMOSTAT OR THERMOMETER OR THROAT
FC	FLEXIBLE CONNECTION OR FAIL CLOSED	TCP	TEMPERATURE CONTROL PANEL
FCU	FAN COIL UNIT	TDH	TOTAL DYNAMIC HEAD
FD	FIRE DAMPER	TEMP	TEMPERATURE
FF	FINISH FLOOR OR FINAL FILTER	THRU	THROUGH
FFE	FINISH FLOOR ELEVATION	TI	TENANT IMPROVEMENT
FLR	FLOOR	TOP	TOP OF DUCT
FPB	FAN POWERED BOX	TS	TEMPERATURE SENSOR
FR	FIRE WRAP	TSP	TOTAL STATIC PRESSURE
FSD	FIRE/SMOKE DAMPER	TYP	TYPICAL
FT	FOOT / FEET	UC	UNDERCUT DOOR
G	GAS	UG	UNDERGROUND
GA	GAUGE, GAGE	UH	UNIT HEATER
GALV	GALVANIZED	UNO	UNLESS NOTED OTHERWISE
GLV	GLOBE VALVE	UTR	UP THRU ROOF
GN	GENERAL NOTE	V	VENT
GND	GROUND	VAV	VARIABLE AIR VOLUME
GPM	GALLON PER MINUTE	VD	VOLUME DAMPER
GV	GATE VALVE	VEL	VELOCITY
HC	HEATING COIL	VFD	VARIABLE FREQUENCY DRIVE
HP	HORSEPOWER	W/	WITH
HP	HIGH PRESSURE	W/O	WITHOUT
HP	HEAT PUMP	WG	WATER GAUGE
HPC	HIGH PRESSURE CONDENSATE	WMS	WIRE MESH SCREEN
HPS	HIGH PRESSURE STEAM	WPD	WATER PRESSURE DROP
HRU	HEAT RECOVERY UNIT	WSHP	WATER SOURCE HEAT PUMP
HVAC	HEATING, VENTILATION & AIR CONDITIONING	WT	WEIGHT
HW	HEATING WATER	XFMR	TRANSFORMER

HVAC LEGEND

SYMBOL	DESCRIPTION
GENERAL	
	LIMIT OF DEMOLITION
	POINT OF CONNECTION
XY.ZZZ	KEYNOTE
M	FURNISHED & INSTALLED BY MECHANICAL
ME	FURNISHED BY MECHANICAL INSTALLED BY ELECTRICAL
EM	FURNISHED BY ELECTRICAL INSTALLED BY MECHANICAL
E	FURNISHED & INSTALLED BY ELECTRICAL
(RAR/EAR)	SUPPLY, RETURN, & EXHAUST REGISTER NECK SIZE AIR QUANTITY (C.F.M.)
(REAG)	RELIEF AIR GRILLE NECK SIZE AIR QUANTITY (CFM)
	LINEAR SUPPLY & RETURN # OF SLOTS - SLOT WIDTH CFM/FT TOTAL LENGTH (FT)
DUCTWORK	
	REMOVE EXIST. EQUIP., PIPES, OR DUCT SHOWN HATCHED
	EXIST. DIFFUSER, RETURN AIR GRILLE OR EXHAUST GRILLE TO BE REMOVED
	RELOCATED EXIST. DIFFUSER, RETURN AIR GRILLE OR EXHAUST GRILLE TO
	EXIST. DIFFUSER, RETURN AIR GRILLE OR EXHAUST GRILLE TO REMAIN OR BE RELOCATED
	EXIST. MECHANICAL EQUIPMENT & DUCT
	EXIST. DUCTWORK TO BE REMOVED & CAPPED
	LINEAR DIFFUSER
	SUPPLY AIR
	RETURN AIR
	EXHAUST AIR
14x12 14x12	RECTANGULAR DUCT SIZE (WIDTH x DEPTH IN INCHES)
14"Ø 14"Ø	ROUND DUCT SIZE (WIDTH x DEPTH IN INCHES)
R	DUCT RISE / DUCT DROP
	DUCT WITH SOUND INSULATION
	STAINLESS STEEL DUCTWORK
	FLEXIBLE DUCT
	RECTANGULAR DUCT UP
	RECTANGULAR DUCT DOWN
	DUCT TRANSITION (RECTANGULAR TO ROUND)
D.L./U.C.	DOOR LOUVER OR UNDERCUT
	AUTOMATIC DAMPER (WITH ACTUATOR)
	BACKDRAFT DAMPER
	MANUAL VOLUME DAMPER
SD	COMBINATION FIRE & SMOKE DAMPER
FD	FIRE DAMPER
CONTROLS (PLAN)	
CO2	CO2 SENSOR
NO2	NITROGEN DIOXIDE SENSOR
H	HUMIDITY SENSOR
O	OXYGEN SENSOR
T_x	ROOM THERMOSTAT & ZONE NUMBER
S	SWITCH (MANUAL WALL MOUNT OR DOOR INTERLOCK)
SD	SMOKE DETECTOR
CO	CARBON MONOXIDE SENSOR
SP	PRESSURE SENSOR (DUCT MOUNTED)
P	PRESSURE SENSOR (ROOM PRESSURE)
V	PURGE EXHAUST CONTROL SWITCH
VS	VISUAL STROBE AND AUDIBLE HORN
RLD	REFRIGERANT LEAK DETECTION SENSOR
PIPING	
#"-####	PIPE TAG (E.G. 2"-CHWS)
	PIPE RISE
	PIPE DROP
	PIPE BRANCH
	GATE VALVE
	GLOBE VALVE
	CHECK VALVE
	BALL VALVE
	BUTTERFLY VALVE
	CIRCUIT SETTER
	REDUCER
	STRAINER
	UNION
	AIR VENT VALVE
	PRESSURE GAUGE
	THERMOMETER
	CONTROL VALVE
	PRESSURE REDUCING VALVE
	PRESSURE & TEMPERATURE RELIEF VALVE
	PIPE ANCHOR

DELEGATED DESIGN NOTES

1. THERMAL EXPANSION DELEGATED-DESIGN SUBMITTALS: FOR EACH ANCHOR AND ALIGNMENT GUIDE, INCLUDING ANALYSIS DATA, SIGNED AND SEALED BY THE QUALIFIED PROFESSIONAL ENGINEER RESPONSIBLE FOR THEIR PREPARATION.
   - 1.1. DESIGN CALCULATIONS: CALCULATE REQUIREMENTS FOR THERMAL EXPANSION OF PIPING SYSTEMS AND FOR SELECTING AND DESIGNING EXPANSION JOINTS, LOOPS, AND SWING CONNECTIONS.
   - 1.2. ANCHOR DETAILS: DETAIL FABRICATION OF EACH ANCHOR INDICATED. SHOW DIMENSIONS AND METHODS OF ASSEMBLY AND ATTACHMENT TO BUILDING STRUCTURE.
   - 1.3. ALIGNMENT GUIDE DETAILS: DETAIL FIELD ASSEMBLY AND ATTACHMENT TO BUILDING STRUCTURE.
   - 1.4. SCHEDULE: INDICATE TYPE, MANUFACTURER'S NUMBER, SIZE, MATERIAL, PRESSURE RATING, END CONNECTIONS, AND LOCATION FOR EACH EXPANSION JOINT.
2. HANGERS & SUPPORTS DELEGATED-DESIGN SUBMITTALS: FOR HANGERS, TRAPEZE HANGERS, ROOF/FLOOR SUPPORTS, WALL SUPPORTS, AND EQUIPMENT SUPPORTS FOR HVAC PIPING, DUCTWORK, AND EQUIPMENT SHALL COMPLY WITH PERFORMANCE REQUIREMENTS AND DESIGN CRITERIA, INCLUDING ANALYSIS DATA SIGNED AND SEALED BY THE QUALIFIED PROFESSIONAL ENGINEER RESPONSIBLE FOR THEIR PREPARATION.
   - 2.1. DETAIL FABRICATION AND ASSEMBLY OF HANGERS, TRAPEZE HANGERS, ROOF/FLOOR SUPPORTS, WALL SUPPORTS, AND EQUIPMENT SUPPORTS FOR HVAC PIPING, DUCTWORK, AND EQUIPMENT.
   - 2.2. INCLUDE DESIGN CALCULATIONS FOR DESIGNING HANGERS, TRAPEZE HANGERS, ROOF/FLOOR SUPPORTS, WALL SUPPORTS, AND EQUIPMENT SUPPORTS FOR HVAC PIPING, DUCTWORK, AND EQUIPMENT.
3. VIBRATION & SEISMIC DELEGATED-DESIGN SUBMITTALS: FOR EACH VIBRATION ISOLATION AND SEISMIC-RESTRAINT DEVICE.
   - 3.1. INCLUDE DESIGN CALCULATIONS AND DETAILS FOR SELECTING VIBRATION ISOLATORS, SEISMIC RESTRAINTS, AND VIBRATION ISOLATION BASES COMPLYING WITH PERFORMANCE REQUIREMENTS, DESIGN CRITERIA, AND ANALYSIS DATA SIGNED AND SEALED BY THE QUALIFIED PROFESSIONAL ENGINEER RESPONSIBLE FOR THE PREPARATION.
   - 3.2. DESIGN CALCULATIONS: CALCULATE STATIC AND DYNAMIC LOADING DUE TO EQUIPMENT WEIGHT, OPERATION, AND SEISMIC FORCES REQUIRED TO SELECT VIBRATION ISOLATORS AND SEISMIC RESTRAINTS AND FOR DESIGNING VIBRATION ISOLATION BASES.
     - 3.2.1. COORDINATE DESIGN CALCULATIONS WITH WIND LOAD CALCULATIONS REQUIRED FOR EQUIPMENT MOUNTED OUTDOORS. COMPLY WITH REQUIREMENTS IN OTHER SECTIONS FOR EQUIPMENT MOUNTED OUTDOORS.
   - 3.3. RISER SUPPORTS: INCLUDE RISER DIAGRAMS AND CALCULATIONS SHOWING ANTICIPATED EXPANSION AND CONTRACTION AT EACH SUPPORT POINT, INITIAL AND FINAL LOADS ON BUILDING STRUCTURE, SPRING DEFLECTION CHANGES, AND SEISMIC LOADS. INCLUDE CERTIFICATION THAT RISER SYSTEM WAS EXAMINED FOR EXCESSIVE STRESS AND THAT NONE EXISTS.
   - 3.4. SEISMIC-RESTRAINT DETAILS:
     - 3.4.1. DESIGN ANALYSIS: TO SUPPORT SELECTION AND ARRANGEMENT OF SEISMIC RESTRAINTS. INCLUDE CALCULATIONS OF COMBINED TENSILE AND SHEAR LOADS.
     - 3.4.2. DETAILS: INDICATED FABRICATION AND ARRANGEMENT. DETAIL ATTACHMENTS OF RESTRAINTS TO THE RESTRAINED ITEMS AND TO THE STRUCTURE. SHOW ATTACHMENT LOCATIONS, METHODS, AND SPACINGS. IDENTIFY COMPONENTS. LIST THEIR STRENGTHS, AND INDICATE DIRECTIONS AND VALUES OF FORCES TRANSMITTED TO THE STRUCTURE DURING SEISMIC EVENTS. INDICATE ASSOCIATION WITH VIBRATION ISOLATION DEVICES.
     - 3.4.3. COORDINATE SEISMIC-RESTRAINT AND VIBRATION ISOLATION DETAILS WITH WIND-RESTRAINT DETAILS REQUIRED FOR EQUIPMENT MOUNTED OUTDOORS. COMPLY WITH REQUIREMENTS IN OTHER SECTIONS FOR EQUIPMENT MOUNTED OUTDOORS.
     - 3.4.4. PREAPPROVAL AND EVALUATION DOCUMENTATION: BY AN AGENCY ACCEPTABLE TO AUTHORITIES HAVING JURISDICTION, SHOWING MAXIMUM RATINGS OF RESTRAINT ITEMS AND THE BASIS OF APPROVAL (TESTS OR CALCULATIONS).

PIPING, DUCTWORK, AND ELECTRICAL DISTRIBUTION SYSTEM BRACING NOTES

PIPING, DUCTWORK AND ELECTRICAL DISTRIBUTION SYSTEM SHALL BE BRACED TO COMPLY WITH THE FORCES AND DISPLACEMENTS PRESCRIBED IN ASCE 7-16 SECTION 13.3 AS DEFINED IN ASCE 7-16 SECTIONS 13.6.5, 13.6.6, 13.6.7, 13.6.8 AND 2022 CBC, SECTIONS 1617A.1.24, 1617A.1.25 AND 1617A.1.26.

THIS METHOD OF SHOWING BRACING AND ATTACHMENTS TO THE STRUCTURE FOR THE IDENTIFIED DISTRIBUTION SYSTEM ARE AS NOTED BELOW. WHEN BRACING AND ATTACHMENTS ARE BASED ON A PRE-APPROVED INSTALLATION GUIDE (E.G., OSHPD OPM FOR 2013 CBC OR LATER). COPIES OF THE BRACING SYSTEM INSTALLATION GUIDE OR MANUAL SHALL BE AVAILABLE ON THE JOBSITE PRIOR TO THE START OF AND DURING THE HANGING AND BRACING OF THE DISTRIBUTION SYSTEMS. THE STRUCTURAL ENGINEER OF RECORD SHALL VERIFY THE ADEQUACY OF THE STRUCTURE TO SUPPORT THE HANGER AND BRACE LOADS.

MECHANICAL PIPING (MP), MECHANICAL DUCTS (MD), PLUMBING PIPING (PP), ELECTRICAL DISTRIBUTION SYSTEMS (E):

☐ MP ☒ MD ☐ PP ☐ E - OPTION 1: DETAILED ON THE APPROVED DRAWINGS WITH PROJECT SPECIFIC NOTES AND DETAILS.

☐ MP ☐ MD ☐ PP ☐ E - OPTION 2: SHALL COMPLY WITH THE APPLICABLE OSHPD PRE-APPROVAL (OPM#)_____

MECHANICAL GENERAL NOTES

1. ALL DRAWINGS ARE CONSIDERED TO BE PART OF THE CONTRACT DOCUMENT. THE CONTRACTOR SHALL BE RESPONSIBLE FOR THE REVIEW AND COORDINATION OF ALL DRAWINGS PRIOR TO ANY CONSTRUCTION, INCLUDING STRUCTURAL, PLUMBING, AIR CONDITIONING AND ELECTRICAL. ANY DISCREPANCIES THAT OCCUR SHALL BE BROUGHT TO THE ATTENTION OF THE ENGINEER PRIOR TO THE START OF CONSTRUCTION SO THAT A CLARIFICATION CAN BE ISSUED. ANY WORK PERFORMED IN CONFLICT WITH THE CONTRACT DOCUMENTS OR ANY CODE REQUIREMENT SHALL BE CORRECTED BY THE CONTRACTOR AT HIS OWN EXPENSE, AND AT NO EXPENSE TO THE OWNER.
2. ALL SYMBOLS AND ABBREVIATIONS USED ON THE DRAWINGS ARE CONSIDERED TO BE CONSTRUCTION STANDARDS. IF CLARIFICATION IS REQUIRED, THE CONTRACTOR SHALL NOTIFY ENGINEER PRIOR TO PROCEEDING WITH THE WORK.
3. DO NOT SCALE DRAWINGS. ALL DIMENSIONS AND JOB SITE CONDITIONS SHALL BE VERIFIED BY THE CONTRACTOR AT THE JOB SITE PRIOR TO BID SUBMITTAL, START OF CONSTRUCTION AND/OR FABRICATION OF MATERIALS. IF DISCREPANCIES ARE ENCOUNTERED, THE ENGINEER SHALL BE NOTIFIED FOR CLARIFICATION.
4. THE CONTRACTOR SHALL FURNISH ALL MATERIALS, LABOR, EQUIPMENT, TRANSPORTATION AND SERVICES NECESSARY FOR COMPLETION OF THE WORK AND PROVIDE A FULLY OPERATIONAL SYSTEM. ALL MATERIALS AND WORK SHALL COMPLY WITH APPLICABLE CODES AND GOVERNING REGULATIONS AND MEET THE APPROVAL OF THE CITY AND STATE FIRE MARSHALL.
5. CONTRACTOR SHALL PROVIDE AND BE RESPONSIBLE FOR PROTECTION AND REPAIR OF ADJACENT EXISTING SURFACES AND AREAS WHICH MAY BE DAMAGED AS A RESULT OF DEMOLITION AND/OR NEW WORK.
6. ALL EQUIPMENT THAT IS REMOVED AND NOT REUSED SHALL BE COORDINATED WITH, AND/OR RETURNED TO, THE BUILDING OWNER.
7. ALL EXISTING DUCT TAPS THAT ARE REMOVED AND NOT REUSED SHALL BE CAPPED AIRTIGHT AND SEALED WITH "MIRACLE" DUCT SEALER AND D-617 OR EQUAL.
8. VERIFY FINAL LOCATION OF THERMOSTATS WITH ARCHITECT AND/OR TENANT CONSTRUCTION COORDINATOR PRIOR TO ANY INSTALLATION WORK.
9. CONTRACTOR SHALL PROVIDE RECORD/AS BUILT DOCUMENTS TO CONSTRUCTION COORDINATOR, ARCHITECT AND ENGINEER AT COMPLETION OF CONSTRUCTION.
10. MAINTAIN NET FREE AREA EQUAL TO DUCT SIZE WHERE FIRE DAMPERS OCCUR.
11. ROOM THERMOSTATS SHALL BE CAPABLE OF BEING SET TO MAINTAIN SPACE TEMPERATURE SET POINTS FOR 55° F TO 85° F AND SHALL BE CAPABLE OF OPERATING THE HEATING AND COOLING IN SEQUENCE. THERMOSTATS SHALL BE ADJUSTABLE TO PROVIDE A TEMPERATURE RANGE OF UP TO 5° F BETWEEN FULL HEATING AND FULL COOLING BEING SUPPLIED. TEMPERATURE CONTROL SYSTEM SHALL OPERATE IN ACCORDANCE WITH THE BASE BUILDING SEQUENCE OF OPERATION
12. PROVIDE MINIMUM DUCT RADIUS ON ELBOWS AT 1-1/2 TIMES DUCT SIZE.
13. ALL CEILING DIFFUSERS ARE 4-WAY THROW UNLESS NOTED OTHERWISE.
    - 13.1. DIFFUSERS SHALL BE ADJUSTED BY MECHANICAL CONTRACTOR AND/OR TEST & BALANCE CONTRACTOR FROM 4-WAY TO 3-WAY OR 2-WAY WHEN WITHIN 3'-0" OF ADJACENT WALL OR CORNER. SUBMIT PROPOSED ADJUSTMENTS IN WRITING PRIOR TO ADJUSTING.
14. CONTRACTOR SHALL STRICTLY COORDINATE ALL CEILING DIFFUSERS AND GRILLES WITH ARCHITECTURAL REFLECTED CEILING PLAN. IF ANY DISCREPANCIES ARE ENCOUNTERED THE ENGINEER SHALL BE NOTIFIED FOR CLARIFICATION. VERIFY WITH OWNERS REPRESENTATIVE IN FIELD PRIOR TO INSTALLATION.
15. RETURN AIR PLENUM SHALL NOT CONTAIN ANY COMBUSTIBLES.
16. MATERIALS EXPOSED WITHIN DUCT OR PLENUM SHALL COMPLY WITH SECTION 602.2 OF THE 2022 CMC. ALL MATERIALS EXPOSED WITHIN THE CEILING PLENUM SHALL HAVE A FLAME-SPREAD INDEX OF NOT MORE THAN 25 AND A SMOKE DEVELOPED RATING OF NOT MORE THAN 50.
17. PROVIDE SMOKE DETECTORS IN MAIN SUPPLY AIR DUCTS OF AIR MOVING SYSTEMS EXCEEDING 2,000 CFM AND COMBINATION OF SYSTEMS SERVING AREAS PERMANENTLY OPEN TO EACH OTHER WHOSE COMBINED SUPPLY AIR EXCEEDS 2,000 CFM PER SECTION 608.0 OF THE 2022 CMC.
18. MECHANICAL REFRIGERATION SYSTEMS SHALL COMPLY WITH REQUIREMENTS OF SECTION 605 OF THE 2022 CFC.
19. ENVIRONMENTAL AIR DUCTS SHALL NOT TERMINATE LESS THAN 3-FT. FROM A PROPERTY LINE, FORCED AIR INLET LOCATED WITHIN 10-FT AND 3-FT FROM OPENINGS INTO A BUILDING, PER CMC 502.2.1.
20. HEATING HOT WATER AND CHILLED WATER PIPING SHALL BE INSTALLED AS HIGH AS POSSIBLE.
21. THE CONTRACTOR SHALL COORDINATE ALL CEILING ACCESS PANELS FOR SERVICING MECHANICAL EQUIPMENT/DEVICES WITH THE ARCHITECT AND INTERIOR DESIGNER AS APPLICABLE.
22. PRIOR TO ROUGH-IN OF ELECTRICAL. PROVIDE COORDINATION SHOP DRAWINGS OF T-STAT LOCATIONS TO ARCH./ENG. FOR REVIEW.
23. DUCT SEALING:
    - 23.1. DUCTWORK SHALL BE SEALED PRIOR TO DELIVERY TO JOB SITE.
    - 23.2. DUCTWORK SHALL BE SEALED DURING DELIVERY.
    - 23.3. DUCTWORK SHALL BE SEALED UPON INSTALLATION.
    - 23.4. OPENINGS INTO EQUIPMENT AND DUCTWORK SHALL BE SEALED DURING CONSTRUCTION.
24. ALL CONTROL WIRING ROUTED IN CEILING PLENUM SHALL BE CLEARLY IDENTIFIED & SECURED TO DUCTWORK OR TIGHT TO STRUCTURE TO PREVENT DAMAGE DURING FUTURE TENTANT IMPROVEMENT PROJECTS.
25. THE CONTRACTOR SHALL VERIFY ALL DIFFUSER/GRILLE/REGISTER/BORDER AND FRAME TYPES WITH THE ARCHITECTURAL REFLECTED CEILING PLAN PRIOR TO ORDERING. COORDINATE ALL FINISHES WITH ARCHITECT.
26. ALL HVAC SYSTEMS INCLUDING HYDRONIC SYSTEMS SHALL BE BALANCED IN ACCORDANCE WITH AN APPROVED METHOD PER THE CMC SECTION 314.1, CALGREEN AND THE ENERGY EFFICIENCY STANDARDS.
27. THROUGH-PENETRATIONS AND MEMBRANE PENETRATIONS SHALL BE PROTECTED BY AN APPROVED PENETRATION FIRESTOP SYSTEM OR MEMBRANE PENETRATION FIRESTOP SYSTEM INSTALLED AS TESTED IN ACCORDANCE WITH ASTM E 814 OR UL 1479, WITH MINIMUM POSITIVE PRESSURE DIFFERENTIAL OF 0.01 INCH (2.49 PA) OF WATER OR AS OTHERWISE PERMITTED BY CBC, SECTION 714. LISTED THROUGH-PENETRATION FIRESTOP SYSTEMS AND MEMBRANE PENETRATIONS SHALL BE INSTALLED IN ACCORDANCE WITH THE INSTALLATION FOR DETAILS LISTED SYSTEMS. LISTED THROUGH-PENETRATION FIRESTOP SYSTEMS, MEMBRANE PENETRATION PROTECTION AND OTHER PERMITTED MEANS AND METHODS OF PENETRATION PROTECTION SHALL BE SUBMITTED FOR OSHPD FDD REVIEW AND APPROVAL PRIOR TO INSTALLATION.
28. PROVIDE BALANCING VOLUME DAMPERS IN EACH BRANCH DUCT AND IN EACH MAIN DUCT TO PROVIDE FOR COMPLETE AIR BALANCING. PROVIDE ADEQUATE ACCESS. OPPOSED BLADE DAMPERS (OBD'S) ARE NOT CONSIDERED BALANCING DAMPERS. COORDINATE ALL LOCATIONS WITH ARCHITECT'S REFLECTED CEILING PLAN WHERE REMOTE BALANCING DAMPERS ARE REQUIRED.
29. PROVIDE INTERNALLY LINED DUCTWORK FOR SUPPLY AND RETURN AIR PLENUMS ON ALL FAN COILS WITH MINIMUM ONE-INCH THICK ACOUSTICAL DUCT LINER.
30. INSTALL DIELECTRIC INSULATION WHERE COPPER PIPES CONNECT TO FERROUS PIPES, COMPONENTS AND EQUIPMENT.
31. OUTDOOR AIR SUPPLY AND EXHAUST EQUIPMENT SHALL BE INSTALLED WITH DAMPERS THAT AUTOMATICALLY CLOSE UPON FAN SHUTDOWN.

EQUIPMENT ANCHORAGE AND SYSTEM BRACING

1. ALL MECHANICAL, PLUMBING, AND ELECTRICAL COMPONENTS SHALL BE ANCHORED AND INSTALLED PER THE DETAILS ON THE APPROVED CONSTRUCTION DOCUMENTS. WHERE NO DETAIL IS INDICATED, THE FOLLOWING COMPONENTS SHALL BE ANCHORED OR BRACED TO MEET THE FORCE AND DISPLACEMENT REQUIREMENTS PRESCRIBED IN THE 2022 CALIFORNIA BUILDING CODE REQUIREMENTS IN ACCORDANCE WITH THE AMERICAN SOCIETY OF CIVIL ENGINEERS - ASCE 7-10, SECTION 13.6 AND TABLE 13.6-1.
   - a. ALL PERMANENT EQUIPMENT AND COMPONENTS.
   - b. TEMPORARY OR MOVABLE EQUIPMENT THAT IS PERMANENTLY ATTACHED (E.G. HARD WIRED) TO THE BUILDING UTILITY SERVICE SUCH AS ELECTRICITY, GAS OR WATER.
   - c. MOVABLE EQUIPMENT WHICH IS STATION IN ONE PLACE FOR MORE THAN 8 HOURS AND HEAVIER THAN 400 POUNDS ARE REQUIRED TO BE ANCHORED WITH TEMPORARY ATTACHMENTS.
2. THE FOLLOWING MECHANICAL AND ELECTRICAL COMPONENTS SHALL BE POSITIVELY ATTACHED TO THE STRUCTURE, BUT THE ATTACHMENT NEED NOT TO BE DETAILED ON PLAN. THESE COMPONENTS SHALL HAVE FLEXIBLE CONNECTIONS PROVIDED BETWEEN THE COMPONENT AND ASSOCIATED DUCTWORK, PIPING AND CONDUIT.
   - a. COMPONENTS WEIGHING LESS THAN 400 POUNDS AND HAVE A CENTER OF MASS LOCATED 4 FEET OR LESS ABOVE THE ADJACENT FLOOR OR ROOF LEVEL THAT DIRECTLY SUPPORT THE COMPONENT.
   - b. COMPONENTS WEIGHING LESS THAN 20 POUNDS, OR IN THE CASE OF DISTRIBUTED SYSTEMS, LESS THAN 5 POUNDS PER FOOT, WHICH ARE SUSPENDED FROM A ROOF OR FLOOR HUNG FROM WALL.
3. FOR THOSE ELEMENTS THAT DO NOT REQUIRE DETAILS ON THE APPROVED DRAWINGS, THE INSTALLATION SHALL BE INSTALLED PER SMACNA GUIDELINES AND/OR MANUFACTURER'S RECOMMENDATIONS.
4. SEISMIC ANCHORAGE OF EQUIPMENT AND BRACING OF PIPING/DUCTWORK SYSTEMS SHALL BE PROVIDED IN ACCORDANCE WITH THE AMERICAN SOCIETY OF CIVIL ENGINEERS - ASCE 7-10, SECTION 13.6 AND TABLE 13.6-1.

APPLICABLE CODES

2022	CALIFORNIA BUILDING CODE
2022	CALIFORNIA MECHANICAL CODE
2022	CALIFORNIA PLUMBING CODE
2022	CALIFORNIA ELECTRICAL CODE
2022	CALIFORNIA FIRE CODE
2022	CALIFORNIA ENERGY STANDARDS
2022	CAL GREEN CODE
	ALL OTHER APPLICABLE LOCAL AND STATE LAWS AND REGULATIONS

IDENTIFICATION STAMP
DIV. OF THE STATE ARCHITECT
APP: 01-120592 INC:
REVIEWED FOR
SS ☑ FLS ☑ ACS ☑
DATE: 7/11/2023

OWNER: San Rafael City Schools

PROJECT NAME: Venetia Valley School Middle School Restroom Addition

CLIENT ADDRESS: Enter address here

REGISTERED PROFESSIONAL ENGINEER
ROGER CARTER
No. M30980
EXP. 06-30-25
MECHANICAL
STATE OF CALIFORNIA

REVISIONS:

	DESCRIPTION	DATE
1		
2		
3		
4		
5		
6		
7		
8		
9		
10		

PROJECT NO:	Project Number
DATE ISSUED:	Issue Date
SCALE:	As indicated

M0.01

MECHANICAL LEGEND, ABBREVIATIONS & NOTES

tk1sc COLLABORATIVE
11870 Pierce Street, Suite 160
Riverside, California 92505
951.299.4160 www.tk1sc.com

Project Leader - Bill Voller
Mechanical Lead - William Galarza
tk1sc Job #: B2203109.000

EXHAUST FANS

TAG	#	MANUFACTURER	MODEL NUMBER	SERVICE	TYPE	DRIVE TYPE	AIR FLOW (CFM)	EXTERNAL STATIC PRESSURE (IN WG)	FAN SPEED (RPM)	ELECTRICAL CONNECTION				ANCHORAGE DETAIL REFERENCE	OPERATING WEIGHT (LBS)	REMARKS
										MOTOR HP OR (WATTS)	VOLTAGE (V)	PHASE	HERTZ (HZ)			
EF	1	GREENHECK	SQ-95-VG	UNISEX RR 6, 7, 8, 9 & 10	INLINE FAN	DIRECT	400	0.7	1,719	0.16	115	1	60	2/M0.02	60	2, 3, 4
EF	2	GREENHECK	SQ-95-VG	UNISEX RR 1, 2, 3 & 4	INLINE FAN	DIRECT	320	0.7	1,608	0.16	115	1	60	2/M0.02	60	2, 3, 4
EF	3	GREENHECK	SP-A390-VG	CUST./STO. 5	CEILING FAN	DIRECT	80	0.3	980	(14)	115	1	60	N/A	30	1, 2

NOTES

1. PROVIDE WITH BACKDRAFT DAMPER, FACTORY PITCHED ROOF CURB AND ROOF CAP.
2. INTERLOCK WITH LIGHTS.
3. PROVIDE EXHAUST VENT GREENHECK MODEL 'GRSR-16'.
4. PROVIDE WITH BACKDRAFT DAMPER AND FACTORY PITCHED ROOF CURB.

DIFFUSERS, REGISTERS AND GRILLES

MARK	MANUFACTURER	MODEL NO./ MODULE SIZE	DESCRIPTION	FACE MOUNT (2)	THROW	DAMPER (3)	COLOR	MAX. NC	REMARKS
CE-1	PRICE	530/ 16X16	LOUVERED RETURN GRILLE	SURFACE MOUNT	-	REMOTE	(1)	30	-

(1) PROVIDE AIR DISTRIBUTION IN B12 WHITE.
(2) REFER TO ARCHITECTURAL REFLECTED CEILING PLAN FOR EXACT CEILING TYPE.
(3) PROVIDE BALANCING DAMPERS FOR EVERY INLET AND OUTLET.

MECHANICAL SCHEDULES | 1

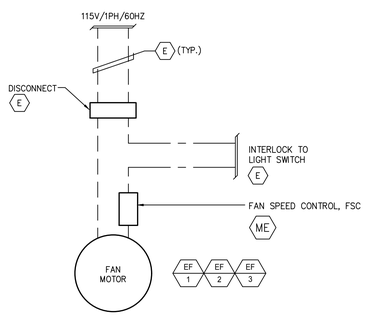

EXHAUST FAN CONTROLLED BY LIGHT SWITCH | 4

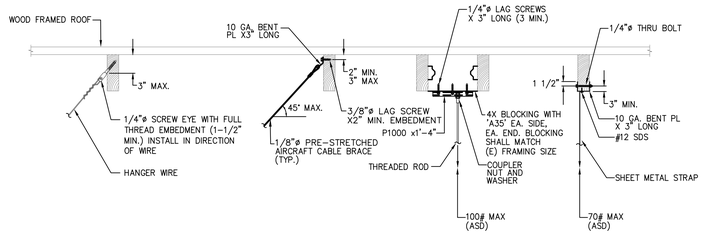

TOP CONNECTION DETAIL | 3

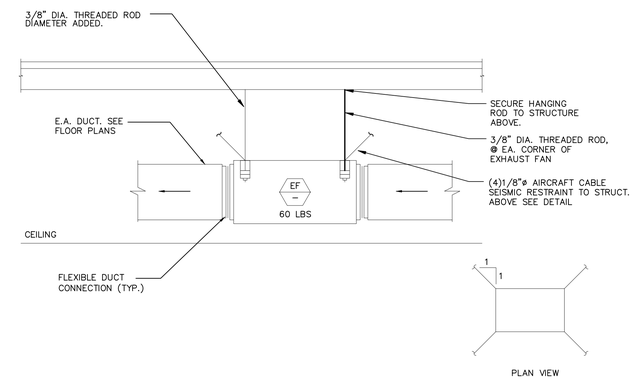

INLINE EXHAUST FAN MOUNTING DETAIL | 2

-

7

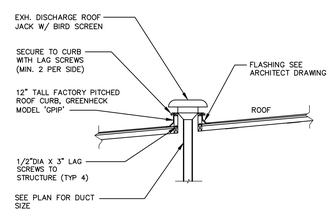

ROOF CAP DETAIL | 6

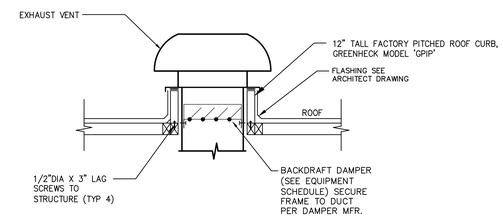

EXHAUST VENT DETAIL | 5

IDENTIFICATION STAMP
DIV. OF THE STATE ARCHITECT
APP: 01-120592 INC:
REVIEWED FOR
SS ☑ FLS ☑ ACS ☑
DATE: 7/11/2023

OWNER: San Rafael City Schools

PROJECT NAME: Venetia Valley School Middle School Restroom Addition

CLIENT ADDRESS: Enter address here

REGISTERED PROFESSIONAL ENGINEER ROGER CARTER No. M30980 Exp. 06-30-25 MECHANICAL CALIFORNIA

REVISIONS:

	DESCRIPTION	DATE
1		
2		
3		
4		
5		
6		
7		
8		
9		
10		
11		
12		

PROJECT NO:	Project Number
DATE ISSUED:	Issue Date
SCALE:	As indicated

M0.02

MECHANICAL SCHEDULES, DETAILS AND CONTROL

tk1sc COLLABORATIVE
11870 Pierce Street, Suite 160
Riverside, California 92505
951.299.4160 www.tk1sc.com

Project Leader - Bill Voller
Mechanical Lead - William Galarza
tk1sc Job #: B2203109.000

CONSTRUCTION NOTES:

1. THE EXISTING RESTROOM WILL BE DEMOLISHED AFTER THE NEW RESTROOMS ARE BUILT.

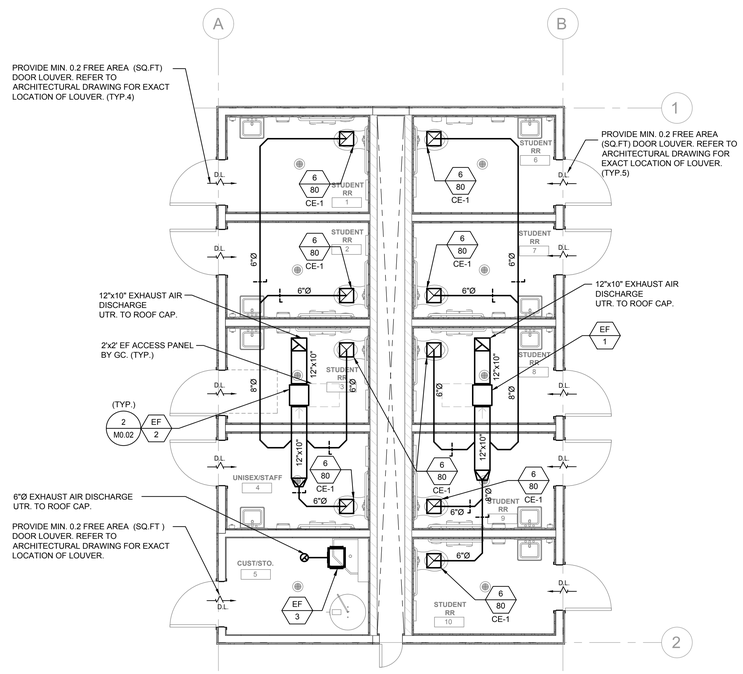

MS RESTROOM FLOOR PLAN | 1/4" = 1'-0" | **1**

IDENTIFICATION STAMP
DIV. OF THE STATE ARCHITECT
APP: 01-120592 INC:
REVIEWED FOR
SS ☑ FLS ☑ ACS ☑
DATE: 7/11/2023

OWNER: San Rafael City Schools

PROJECT NAME: Venetia Valley School Middle School Restroom Addition

CLIENT ADDRESS: Enter address here

REGISTERED PROFESSIONAL ENGINEER
ROGER CARTER
No. M30980
Exp. 06-30-25
MECHANICAL
CALIFORNIA

REVISIONS:

	DESCRIPTION	DATE
1		
2		
3		
4		
5		
6		
7		
8		
9		
10		
11		

PROJECT NO: Project Number

DATE ISSUED: Issue Date

SCALE: As indicated

M1.01

MECHANICAL FLOOR PLAN

tk1sc COLLABORATIVE
11870 Pierce Street, Suite 160
Riverside, California 92505
951.299.4160 www.tk1sc.com

Project Leader - Bill Voller
Mechanical Lead - William Galarza
tk1sc Job #: B2203109.000

ABBREVIATIONS

4S/DP	4" SQUARE BY 2-1/8" DEEP BOX
ADA	AMERICAN WITH DISABILITIES ACT
A.F.F.	ABOVE FINISH FLOOR
A.F.G.	ABOVE FINISH GRADE
AWG	AMERICAN WIRE GAUGE
AMP, A	AMPERE
A.I.C. or AIC	AMPERES INTERRUPTING CAPACITY (SYMMETRICAL)
A.F.C. or AFC	AVAILABLE FAULT CURRENT
AF/AT	AMP FRAME, AMP TRIP
AHJ	AUTHORITY HAVING JURISDICTION
AS/AF	AMP SWITCH, AMP FUSE
ATS	AUTOMATIC TRANSFER SWITCH
AVG	AVERAGE
BJ	BONDING JUMPER
BDF	BUILDING DISTRIBUTION FRAME
BR	BRANCH
BLDG	BUILDING
CBC	CALIFORNIA BUILDING CODE
CEC	CALIFORNIA ELECTRICAL CODE
CIRC., CKT.	CIRCUIT
CB	CIRCUIT BREAKER
CSFD	COMBINATION SMOKE FIRE DAMPER
C	CONDUIT
C.O.	CONDUIT ONLY, COMPLETE WITH PULLSTRING
CONN	CONNECTED
CPT	CONTROL POWER TRANSFORMER
CLCB	CURRENT LIMITING CIRCUIT BREAKER
CLF	CURRENT LIMITING FUSE
CT	CURRENT TRANSFORMER
(D)	EXISTING DEVICE TO BE DEMOLISHED
DAS	DISTRIBUTED ANTENNA SYSTEM
DIA	DIAMETER
DISC	DISCONNECT
DIST	DISTRIBUTION
D.P.C.S.	DIMMING PANEL CONTROL STATION
E.C.	ELECTRICAL CONTRACTOR
EMS	ENERGY MANAGEMENT CONTROL SYSTEM
EMT	ELECTRICAL METALLIC TUBING
ENT	ELECTRICAL NON-METALLIC TUBING
EWC	ELECTRIC WATER COOLER
E.P.O.	EMERGENCY POWER OFF
E-O-L	END-OF-LINE CIRCUIT TERMINATOR
EF	EXHAUST FAN
EGC or EG or E/G	EQUIPMENT GROUND (GREEN)
(E)	EXISTING DEVICE TO REMAIN
EP	EXPLOSION PROOF
(ER)	EXISTING DEVICE TO BE RELOCATED
FT or '	FEET
FA or F.A.	FIRE ALARM
FLA	FULL LOAD AMPS
GRD	GROUND
GFCI	GROUND FAULT CIRCUIT INTERRUPTER
GFP	GROUND FAULT PROTECTION
GE or GEC	GROUNDING ELECTRODE CONDUCTOR
HACR	HEATING AIR CONDITIONING REFRIGERATION
HOA	HAND-OFF-AUTO
HVAC	HEATING, VENTILATING AND AIR CONDITIONING
H.,W.,D.,L.	HEIGHT, WIDTH, DEPTH, LENGTH
HID	HIGH INTENSITY DISCHARGE
HP	HORSEPOWER
HPS	HIGH PRESSURE SODIUM
IN. or "	INCHES
I/G	ISOLATED GROUND
IBC	INTERNATIONAL BUILDING CODE
I.D.C.S.	INTEGRATED DIMMING CONTROL PANEL
IDF	INTERMEDIATE DISTRIBUTION FRAME
JBOX	JUNCTION BOX
K	DEGREE KELVIN
KCMIL	THOUSAND CIRCULAR MILS
KVA	KILOVOLT AMPERES
KW	KILOWATT
KWH	KILOWATT HOUR
LCL	LONG CONTINUOUS LOAD
LF, L.F.	LINEAR FEET
LTG, LTS	LIGHTING
LPS	LOW PRESSURE SODIUM
MAX.	MAXIMUM
MBJ	MAIN BONDING JUMPER
MDF	MAIN DISTRIBUTION FRAME
MOCP	MAXIMUM OVERCURRENT PROTECTION
MCB	MAIN CIRCUIT BREAKER
MLO	MAIN LUGS ONLY
M.C.	MECHANICAL CONTRACTOR
M	METER
M/M	METER MAIN
MV	MERCURY VAPOR
MH	METAL HALIDE
MIN.	MINIMUM
MCA	MINIMUM CIRCUIT AMPS
MCC	MOTOR CONTROL CENTER
MCM	THOUSAND CIRCULAR MILS
MCP	MOTOR CIRCUIT PROTECTOR
MFR.	MANUFACTURER
MTD	MOUNTED
MW	MICROWAVE
NATS	NON AUTOMATIC DISCONNECT
NEC	NATIONAL ELECTRICAL CODE
NEMA	NATIONAL ELECTRICAL MANUFACTURER'S ASSOCIATION
NC	NORMALLY CLOSED
NO	NORMALLY OPENED
NF	NON-FUSED
NIC	NOT IN CONTRACT
N.T.S.	NOT TO SCALE
NL	NIGHT LIGHT
NO. or #	NUMBER
OFCI	OWNER FURNISHED, CONTRACTOR INSTALLED
%Z	PERCENT IMPEDANCE
PH. or ø	PHASE
PC	PHOTOCELL
P.C.	PLUMBING CONTRACTOR
P	POLE
PVC	POLY VINYL CHLORIDE
PDU	POWER DISTRIBUTION UNIT
PRIMARY	OVER 600 VOLTS
PROVIDE	FURNISH, INSTALL AND CONNECT
PT	POTENTIAL TRANSFORMER
PA	PUBLIC ADDRESS
(R)	DENOTES RELOCATED DEVICE LOCATION.
REC, RECEPT	RECEPTACLE
REF	REFRIGERATOR
RGS	RIGID GALVANIZED STEEL
RMS	ROOT MEAN SQUARE
SCC	SHORT CIRCUIT CURRENT
SCCR	SHORT CIRCUIT CURRENT RATING
SCS	STRUCTURED CABLING SYSTEM
SFD	SMOKE FIRE DAMPER
SECONDARY	600 VOLTS AND LESS
SMACNA	SHEET METAL AND AIR COND. CONTRACTOR'S NAT'L ASSOC.
SQ.	SQUARE
SSBJ	SUPPLY SIDE BONDING JUMPER
SBJ	SYSTEM BONDING JUMPER
TC	TIMECLOCK
TEL/DATA	TELEPHONE AND DATA
TV	TELEVISION
T.V.S.S.	TRANSIENT VOLTAGE SURGE SUPPRESSION
TYP	TYPICAL
U.G.P.S.	UNDERGROUND PULL SECTION
U.O.N.	UNLESS OTHERWISE NOTED
U.P.S. or UPS	UNINTERRUPTABLE POWER SYSTEM
VAV	VARIABLE AIR VOLUME
V	VOLTS
VA	VOLT AMPERES
VD	VOLTAGE DROP
WP	WEATHERPROOF
W	WIRE
XFMR	TRANSFORMER

FIRE ALARM SYSTEM SYMBOLS

SEE FIRE ALARM OR CENTRAL MONITORING SYSTEM DRAWINGS FOR FIRE ALARM SYMBOLS.

SIGNAL SYSTEM SYMBOLS

WP — FLUSH WALL MOUNTED EXTERIOR PUBLIC ADDRESS SPEAKER WITH WEATHER PROOF BAFFLE AND BACKBOX, WITH CONDUIT AND CONDUCTORS PER PLANS.

PATC — PUBLIC ADDRESS SYSTEM TERMINAL CABINET WITH AMPLIFIER, POWER SUPPLY, ETCETERA, – SEE SPECIFICATIONS.

—S— CONCEALED SPEAKER CONDUIT RUN 3/4" CONDUIT, OR AS NOTED, WITH CONDUCTORS – REFER TO SPECIFICATIONS.

SECURITY ALARM SYSTEM SYMBOLS

SACP — SECURITY ALARM CONTROL PANEL – SEE SPECIFICATIONS.

SATC — SECURITY ALARM SYSTEM TERMINAL CABINET WITH POWER SUPPLY, ETCETERA – REFER TO SPECIFICATIONS.

SC — SECURITY ALARM FLUSH DOOR CONTACT WITH CONDUCTORS – REFER TO SPECIFICATIONS.

—SA— SECURITY ALARM SYSTEM CONDUIT, 3/4" MINIMUM OR AS NOTED ON PLANS.

ANNOTATIONS

A — PANEL CALLOUT, "A" INDICATES PANELBOARD OR EQUIPMENT DESIGNATION.

AC 2 — MECHANICAL EQUIPMENT CALLOUT, "AC" INDICATES UNIT TYPE AND "2" INDICATES UNIT NUMBER. REFER TO MECHANICAL DRAWINGS FOR EXACT LOCATION AND ELECTRICAL REQUIREMENTS.

3 E-1 — DETAIL CALLOUT, "3" INDICATES DETAIL NUMBER "E-1" INDICATES SHEET NUMBER.

2 — PLAN NOTE REFERENCE, REFER TO NOTES ON SHEET, OR AS DIRECTED.

△4 — REVISION REFERENCE.

WYE CONFIGURATION — DELTA CONFIGURATION — GROUND

TELEPHONE/DATA SYMBOLS

4S DEEP DATA OUTLET BOX FLUSH MOUNTED IN CEILING

DATA OUTLET BOX, WALL MOUNTED, STUB A 1" C. UP 6-INCHES ABOVE THE ACCESSIBLE CEILING AND PROVIDE A BUSHING. 4S/DP MINIMUM WITH SINGLE GANG RING.

—T— CONCEALED TELEPHONE/DATA CONDUIT RUN, 1-INCH CONDUIT (MIN). SEE TABLE BELOW FOR CONDUIT SIZE VARIATIONS.
T1 = 1-1/4" C. T2 = 1-1/2" C. T3 = 2" C.

FLUSH MOUNTED, LOCKABLE TERMINAL CABINET WITH TERMINAL STRIPS AS REQUIRED.

SURFACE MOUNTED, LOCKABLE TERMINAL CABINET WITH TERMINAL STRIPS AS REQUIRED.

TELEPHONE TERMINAL BACKBOARD SIZED AS NOTED, REFER TO SYSTEM GROUND DETAIL.

IDF — HUBBELL RE4 WALL MOUNT CABINET COMPLETE, UNLESS OTHERWISE NOTED ON THE PLAN DRAWINGS.

WP — FLUSH WALL MOUNTED 4S DEEP BOX WITH BLANK WEATHER PROOF COVER, WITH DATA OUTLET AND CONDUIT AS SHOWN ON PLANS. REFER TO DETAIL 6/E3.02 FOR ADDITIONAL INFORMATION.

BRANCH CIRCUIT SYMBOLS

A-1,3,5 — HOME RUN TO PANEL. LETTER DESIGNATES PANEL, NUMBERS INDICATE CIRCUITS. HASH MARKS INDICATE NUMBER OF CONDUCTORS IN CONDUIT RUN, #12 AWG MINIMUM UNLESS OTHERWISE NOTED.

A-1&3&5 — HOME RUN TO PANEL. LETTER DESIGNATES PANEL, NUMBERS INDICATE CIRCUITS WITH SEPARATE NEUTRALS. "&" INDICATES SEPARATE NEUTRALS.

A-1+3+5 — HOME RUN TO PANEL. LETTER DESIGNATES PANEL, NUMBERS INDICATE CIRCUITS. "+" INDICATES SEPARATE #10 NEUTRAL THROUGHOUT BRANCH CIRCUIT. HASH MARK " " INDICATES AN ISOLATED GROUND CONDUCTOR.

CONCEALED CONDUIT OR BRANCH CIRCUIT UNLESS OTHERWISE NOTED. 1/2" CONDUIT MINIMUM, (2) #12 AWG CONDUCTORS MINIMUM.

CONDUIT OR BRANCH CIRCUIT CONCEALED BELOW GRADE, 3/4" CONDUIT MINIMUM WITH (2) 12 AWG CONDUCTORS MINIMUM AND A CODE SIZED EQUIPMENT GROUND.

SURFACE-MOUNTED CONDUIT OR BRANCH CIRCUIT UNLESS OTHERWISE NOTED. 1/2" CONDUIT MINIMUM, (2) #12 AWG CONDUCTORS MINIMUM.

TANDEM WIRING CONNECTION.

CONDUIT STUB OUT, CAP, MARK AND RECORD ON AS-BUILT DRAWINGS

CONDUIT CONTINUATION.

FLEXIBLE CONNECTION AS REQUIRED. NUMBER OF CONDUCTORS AS REQUIRED. VERIFY CONNECTION REQUIREMENTS WITH MANUFACTURER PRIOR TO ROUGH-IN.

CONDUIT/ BRANCH CIRCUIT/FEEDER CONTINUATION DOWN WALL TO FLOOR BELOW

CONDUIT/ BRANCH CIRCUIT/FEEDER CONTINUATION UP WALL TO FLOOR ABOVE

MEP EQUIPMENT ANCHORAGE NOTE:

ALL MECHANICAL, ELECTRICAL AND PLUMBING COMPONENTS SHALL BE ANCHORED AND INSTALLED PER THE DETAILS ON THE DSA APPROVED CONSTRUCTION DOCUMENTS. THE FOLLOWING COMPONENTS SHALL BE ANCHORED OR BRACED TO MEET THE FORCE AND DISPLACEMENT REQUIREMENTS PRESCRIBED IN THE 2019 CBC, SECTIONS 1617A.1.18 THROUGH 1617A.1.26 AND ASCE 7-16, CHAPTERS 13, 26 AND 30.

A. ALL PERMANENT EQUIPMENT AND COMPONENTS.

B. TEMPORARY OR MOVABLE EQUIPMENT THAT IS PERMANENTLY ATTACHED (EG. HARD WIRED) TO THE BUILDING UTILITY SERVICES SUCH AS ELECTRICITY, GAS OR WATER. "PERMANENTLY ATTACHED" SHALL INCLUDE ALL ELECTRICAL CONNECTIONS EXCEPT PLUGS FOR 110/220V RECEPTACLES HAVING A FLEXIBLE CABLE.

C. TEMPORARY, MOVABLE OR MOBILE EQUIPMENT WHICH IS HEAVIER THAN 400 POUNDS OR HAS A CENTER OF MASS LOCATED 4 FEET OR MORE ABOVE THE ADJACENT FLOOR OR ROOF LEVEL THAT DIRECTLY SUPPORT THE COMPONENT IS REQUIRED TO BE RESTRAINED IN A MANNER APPROVED BY THE DSA.

THE FOLLOWING MECHANICAL AND ELECTRICAL COMPONENTS SHALL BE POSITIVELY ATTACHED TO THE STRUCTURE BUT NEED NOT DEMONSTRATE DESIGN COMPLIANCE WITH THE REFERENCES NOTED ABOVE. THESE COMPONENTS SHALL HAVE FLEXIBLE CONNECTIONS PROVIDED BETWEEN THE COMPONENT AND ASSOCIATED DUCTWORK, PIPING, AND CONDUIT. FLEXIBLE CONNECTIONS MUST ALLOW MOVEMENT IN BOTH TRANSVERSE AND LONGITUDINAL DIRECTIONS:

A. COMPONENTS WEIGHING LESS THAN 400 POUNDS AND HAVING A CENTER OF MASS LOCATED 4 FEET OR LESS ABOVE THE ADJACENT FLOOR OR ROOF LEVEL THAT DIRECTLY SUPPORT THE COMPONENT.

B. COMPONENTS WEIGHING LESS THAN 20 POUNDS, OR IN THE CASE OF DISTRIBUTED SYSTEMS, LESS THAN 5 POUNDS PER FOOT, WHICH ARE SUSPENDED FROM A ROOF OR FLOOR OR HUNG FROM A WALL.

THE ANCHORAGE OF ALL MECHANICAL, ELECTRICAL AND PLUMBING COMPONENTS SHALL BE SUBJECT TO THE APPROVAL OF THE DESIGN PROFESSIONAL IN GENERAL RESPONSIBLE CHARGE OR STRUCTURAL ENGINEER DELEGATED RESPONSIBILITY AND ACCEPTANCE BY DSA. THE PROJECT INSPECTOR WILL VERIFY THAT ALL COMPONENTS AND EQUIPMENT HAVE BEEN ANCHORED IN ACCORDANCE WITH THE ABOVE REQUIREMENTS.

PIPING, DUCTWORK AND ELECTRICAL DISTRIBUTION SYSTEM BRACING NOTE:

PIPING, DUCTWORK AND ELECTRICAL DISTRIBUTION SYSTEMS SHALL BE BRACED TO COMPLY WITH THE FORCES AND DISPLACEMENTS PRESCRIBED IN ASCE 7-16 SECTION 13.3 AS DEFINED IN ASCE 7-16 SECTION 13.6.5, 13.6.6, 13.6.7, 13.6.8; AND 2019 CBC, SECTIONS 1617A.1.24, 1617A.1.25 AND 1616A.1.26.

THE METHOD OF SHOWING BRACING AND ATTACHMENTS TO THE STRUCTURE FOR THE IDENTIFIED DISTRIBUTION SYSTEM ARE AS NOTED BELOW. WHEN BRACING AND ATTACHMENTS ARE BASED ON A PREAPPROVED INSTALLATION GUIDE (E.G. OSHPD OPM FOR 2013 CBC OR LATER), COPIES OF THE BRACING SYSTEM INSTALLATION GUIDE OR MANUAL SHALL BE AVAILABLE ON THE JOBSITE PRIOR TO THE START OF AND DURING THE HANGING AND BRACING OF THE DISTRIBUTION SYSTEMS. THE STRUCTURAL ENGINEER OF RECORD SHALL VERIFY THE ADEQUACY OF THE STRUCTURE TO SUPPORT THE HANGER AND BRACE LOADS.

MECHANICAL PIPING (MP), MECHANICAL DUCTS (MD), PLUMBING PIPING (PP), ELECTRICAL DISTRIBUTION SYSTEMS (E):

MP☐ MD☐ PP☐ E☒ — OPTION 1: DETAILED ON THE APPROVED DRAWINGS WITH PROJECT SPECIFIC NOTES AND DETAILS.

MP☐ MD☐ PP☐ E☐ — OPTION 2: SHALL COMPLY WITH THE APPLICABLE OSHPD PRE-APPROVAL (OPM#) #0052-13 & #0043-13.

POWER SYMBOLS

ALL RECEPTACLE OUTLETS SHOWN WITH A DIAGONAL SLASH SHALL BE CONTROLLED BY OCCUPANCY SENSOR OR LIGHTING CONTROL PANEL. SEE DISTRIBUTED LIGHTING CONTROLS FOR ADDITIONAL REQUIREMENTS. WHERE DOUBLE DUPLEX RECEPTACLE OUTLETS ARE INDICATED AS CONTROLLED, ONLY A SINGLE DUPLEX RECEPTACLE OUTLET (NON-IG, NON-GCFI TYPE) SHALL BE CONTROLLED. WITHIN ANY CONTROLLED DUPLEX RECEPTACLE OUTLET, ONLY ONE RECEPTACLE SHALL BE CONTROLLED. NOTE THAT FOR FLOOR BOXES OR POKE-THRU DEVICES, THE ASSOCIATED CONTROL RELAY MAY NEED TO BE LOCATED WITHIN THE ELECTRICAL ROOM WHERE THE CONTROLLED CIRCUIT ORIGINATES.

a — OCCUPANCY SENSOR/LIGHTING CONTROL SYSTEM CONTROLLED RECEPTACLE RELAY. WHERE LETTER DESIGNATION "a" REPRESENTS OCCUPANCY SENSOR/LIGHTING CONTROL SYSTEM CONTROL ZONE. SEE THE DISTRIBUTED LIGHTING CONTROL SPECIFICATION FOR MORE INFORMATION.

DUPLEX RECEPTACLE, WALL MOUNTED.

DOUBLE DUPLEX RECEPTACLE, WALL MOUNTED.

DUPLEX, GFCI RECEPTACLE, WALL MOUNTED. WP INDICATES WEATHERPROOF, A, B OR C INDICATES THE TYPE OF COVER, REFER TO THE GENERAL PRODUCT SPECIFICATIONS.

DOUBLE DUPLEX, WALL MOUNTED, WITH (1) GFCI RECEPTACLE AND (1) DUPLEX RECEPTACLE CONNECTED ON LOAD SIDE OF GFCI. WP INDICATES WEATHERPROOF, A, B OR C INDICATES THE TYPE OF COVER, REFER TO THE GENERAL PRODUCT SPECIFICATIONS.

DUPLEX RECEPTACLE, ONE HALF SWITCHED, WALL MOUNTED.

DUPLEX, ISOLATED GROUND RECEPTACLE, WALL MOUNTED.

.3 1,3a — COMBINATION DOUBLE DUPLEX: ONE ISOLATED GROUND DUPLEX RECEPTACLE AND ONE DUPLEX RECEPTACLE, WALL MOUNTED.

COMBINATION DOUBLE DUPLEX: TWO ISOLATED GROUND RECEPTACLES, WALL MOUNTED.

SIMPLEX RECEPTACLE, WALL MOUNTED.

SPECIAL RECEPTACLE, WALL MOUNTED. REFER TO PLAN NOTES.

DUPLEX RECEPTACLE FLUSH IN CEILING – MOUNT FLUSH IN FLOOR WHEN INDICATED IN A FLOOR BOX SYMBOL.

DOUBLE DUPLEX RECEPTACLE FLUSH IN CEILING – MOUNT FLUSH IN FLOOR WHEN INDICATED IN A FLOOR BOX SYMBOL.

DUPLEX RECEPTACLE, ONE HALF SWITCHED, FLUSH IN CEILING – MOUNT FLUSH IN FLOOR WHEN INDICATED IN A FLOOR BOX SYMBOL.

DUPLEX, ISOLATED GROUND RECEPTACLE, FLUSH IN CEILING – MOUNT FLUSH IN FLOOR WHEN INDICATED IN A FLOOR BOX SYMBOL.

.3 1,3a — COMBINATION DOUBLE DUPLEX: ONE ISOLATED GROUND DUPLEX RECEPTACLE AND ONE DUPLEX RECEPTACLE, MOUNTED FLUSH IN CEILING – MOUNT FLUSH IN FLOOR WHEN INDICATED IN FLOOR BOX SYMBOL.

COMBINATION DOUBLE DUPLEX FLUSH IN CEILING: TWO ISOLATED GROUND RECEPTACLES – MOUNT FLUSH IN FLOOR WHEN INDICATED IN FLOOR BOX SYMBOL.

SIMPLEX RECEPTACLE FLUSH IN CEILING – MOUNT FLUSH IN FLOOR WHEN INDICATED IN A FLOOR BOX SYMBOL.

SPECIAL RECEPTACLE FLUSH IN CEILING – MOUNT FLUSH IN FLOOR WHEN INDICATED IN A FLOOR BOX SYMBOL.

DUPLEX RECEPTACLE, WALL MOUNTED AT 6-INCHES ABOVE COUNTER OR SPLASH.

DOUBLE DUPLEX RECEPTACLE, WALL MOUNTED AT 6-INCHES ABOVE COUNTER OR SPLASH.

DUPLEX, GFCI RECEPTACLE, WALL MOUNTED AT 6-INCHES ABOVE COUNTER OR SPLASH. WP INDICATES WEATHERPROOF, A, B OR C INDICATES THE TYPE OF COVER, REFER TO THE GENERAL PRODUCT SPECIFICATIONS.

DOUBLE DUPLEX, WALL MOUNTED 6-INCHES ABOVE COUNTER OR SPLASH, WITH (1) GFCI RECEPTACLE AND (1) DUPLEX RECEPTACLE CONNECTED ON LOAD SIDE OF GFCI. WP INDICATES WEATHERPROOF, A, B OR C INDICATES THE TYPE OF COVER, REFER TO THE GENERAL PRODUCT SPECIFICATIONS.

DUPLEX RECEPTACLE, BOTTOM HALF SWITCHED, WALL MOUNTED AT 6-INCHES ABOVE COUNTER OR SPLASH.

DUPLEX, ISOLATED GROUND RECEPTACLE, WALL MOUNTED AT 6-INCHES ABOVE COUNTER OR SPLASH.

.3 1,3a — COMBINATION DOUBLE DUPLEX: ONE ISOLATED GROUND DUPLEX RECEPTACLE AND ONE DUPLEX RECEPTACLE, WALL MOUNTED AT 6-INCHES ABOVE COUNTER OR SPLASH.

COMBINATION DOUBLE DUPLEX: TWO ISOLATED GROUND DUPLEX RECEPTACLES, WALL MOUNTED AT 6-INCHES ABOVE COUNTER OR SPLASH.

SIMPLEX RECEPTACLE, WALL MOUNTED AT 6-INCHES ABOVE COUNTER OR SPLASH.

SPECIAL RECEPTACLE, WALL MOUNTED AT 6-INCHES ABOVE COUNTER OR SPLASH. REFER TO PLAN NOTES.

WP-B — WET LOCATION-LISTED (RAINTITE-IN-USE) RECEPTACLE – SEE ELECTRICAL SPECIFICATION FOR ADDITIONAL INFORMATION.

WP-D — DAMP LOCATION-LISTED (NOT-RAINTITE-IN-USE) RECEPTACLE – SEE ELECTRICAL SPECIFICATION FOR ADDITIONAL INFORMATION.

DUPLEX RECEPTACLES WITH TWO 5V, 3.6A USB CHARGING PORTS. PROVIDE COLOR AS REQUIRED IN 15A OR 20A CONFIGURATION AND/OR TAMPER RESISTANT AND/OR HOSPITAL GRADE AS REQUIRED BY PLANS AND THE WIRING DEVICES SECTION OF THE GENERAL ELECTRICAL SPECIFICATIONS. (PASS & SEYMOUR OR EQUAL BY HUBBELL OR LEVITON.)

QUAD RECEPTACLES WITH TWO 5V, 3.6A USB CHARGING PORTS. PROVIDE COLOR AS REQUIRED IN 15A OR 20A CONFIGURATION AND/OR TAMPER RESISTANT AND/OR HOSPITAL GRADE AS REQUIRED BY PLANS AND THE WIRING DEVICES SECTION OF THE GENERAL ELECTRICAL SPECIFICATIONS. (PASS & SEYMOUR OR EQUAL BY HUBBELL OR LEVITON.)

J — JUNCTION BOX, WALL MOUNTED AT +18-INCHES A.F.F. OR AS NOTED. 4S/DP MINIMUM OR AS REQUIRED BY N.E.C. OR CEC, WHERE ADOPTED.

J — JUNCTION BOX, MOUNTED IN ACCESSIBLE CEILING FOR APPLICATION DENOTED ON PLAN. 4S/DP MINIMUM OR AS REQUIRED BY N.E.C. OR CEC, WHERE ADOPTED.

J — JUNCTION BOX, WALL MOUNTED AT 6-INCHES ABOVE COUNTER OR SPLASH. 4S/DP MINIMUM OR AS REQUIRED BY N.E.C., OR CEC, WHERE ADOPTED.

J — JUNCTION BOX, 4S MINIMUM OR AS REQUIRED BY N.E.C., OR CEC, WHERE ADOPTED. MOUNTED IN ACCESSIBLE CEILING SPACE PER PLAN FOR FLEXIBLE CONNECTION TO PRE-WIRED FURNITURE SYSTEM. MOUNT FLUSH IN FLOOR WHEN INDICATED IN A FLOOR BOX SYMBOL. WHEN SHOWN WITH A DIAGONAL SLASH, THE LAST GENERAL RECEPTACLE CIRCUIT ON THE HOME-RUN CALL OUT SHALL BE CONTROLLED BY THE OCCUPANCY SENSOR. COORDINATE CONTROLLED CIRCUIT CONNECTION REQUIREMENTS WITH FURNITURE SYSTEM MANUFACTURER PRIOR TO ROUGH-IN. SEE DISTRIBUTED LIGHTING CONTROLS FOR ADDITIONAL REQUIREMENTS.

J — JUNCTION BOX, WALL MOUNTED AT +18-INCHES A.F.F., 4S/DP MINIMUM OR AS REQUIRED BY N.E.C., OR CEC, WHERE ADOPTED, FOR FLEXIBLE CONNECTION TO PREWIRED FURNITURE SYSTEM. WHEN SHOWN WITH A DIAGONAL SLASH, THE LAST GENERAL RECEPTACLE CIRCUIT ON THE HOME-RUN CALLOUT SHALL BE CONTROLLED BY THE OCCUPANCY SENSOR. COORDINATE CONTROLLED CIRCUIT CONNECTION REQUIREMENTS WITH FURNITURE SYSTEM MANUFACTURER PRIOR TO ROUGH-IN. SEE DISTRIBUTED LIGHTING CONTROLS FOR ADDITIONAL REQUIREMENTS.

SURFACE MOUNTED MULTI-OUTLET ASSEMBLY. REFER TO GENERAL PRODUCT SPECIFICATIONS. PROVIDE ALL COMPONENTS NECESSARY FOR A COMPLETE INSTALLATION.

T — THERMOSTAT OUTLET BOX, PROVIDE 1/2" C.O. TO RESPECTIVE MECHANICAL UNIT.

EXHAUST FAN, OR MOTOR LOAD. REFER TO MECHANICAL, PLUMBING OR KITCHEN DRAWINGS FOR SPECIFIC LOAD REQUIREMENTS OR AS NOTED.

FLUSH MOUNTED ELECTRICAL PANELBOARD OR LOAD CENTER. REFER TO PANEL SCHEDULE.

SURFACE MOUNTED ELECTRICAL PANELBOARD OR LOAD CENTER. REFER TO PANEL SCHEDULE.

DISTRIBUTION SWITCHBOARD. REFER TO SINGLE LINE DIAGRAM.

T — TRANSFORMER, REFER TO SINGLE LINE DIAGRAM.

F — FUSED DISCONNECT SWITCH, HP RATED, OR COMBINATION MOTOR STARTER/DISCONNECT SWITCH WITH FUSES PER EQUIPMENT MANUFACTURER AND WEATHERPROOF AS REQUIRED. PROVIDE FINAL CONNECTION TO UNIT EQUIPMENT. SEE MOTORIZED EQUIPMENT SCHEDULE FOR DISCONNECT AND STARTER SIZES.

NON-FUSED DISCONNECT SWITCH, HP RATED AND WEATHERPROOF AS REQUIRED. PROVIDE FINAL CONNECTION TO UNIT EQUIPMENT. SEE MOTORIZED EQUIPMENT SCHEDULE FOR DISCONNECT SIZES.

M — UTILITY COMPANY METER. PROVIDE "CT's" AND "PT's" AS REQUIRED, REFER TO SINGLE LINE DIAGRAM.

A B C — CIRCUIT BREAKER: "A" REPRESENTS CIRCUIT BREAKER AMPERE RATING, "B" REPRESENTS NUMBER OF POLES AND "C" REPRESENTS MISCELLANEOUS BREAKER FEATURES.
SHUNT= PROVIDE SHUNT TRIP MECHANISM
GFP= GROUND FAULT PROTECTION
CLCB= CURRENT LIMITING CIRCUIT BREAKER
SS= PROVIDE SOLID STATE CIRCUIT BREAKER
LO= PROVIDE PERMANENT LOCK-OPEN (OFF) HARDWARE
LC= PROVIDE PERMANENT LOCK-CLOSED (ON) HARDWARE

A B C D — FUSIBLE SWITCH: "A" REPRESENTS SWITCH/FRAME AMPERE RATING, "B" REPRESENTS THE FUSE AMPERE RATING, "C" INDICATES NUMBER OF POLES AND "D" REPRESENTS MISCELLANEOUS FUSE/SWITCH FEATURES.
SHUNT= PROVIDE SHUNT TRIP MECHANISM
GFP= GROUND FAULT PROTECTION
CLF= CURRENT LIMITING FUSE

GROUND CONNECTION, SIZE AS INDICATED OR AS REQUIRED.

$a,b — SINGLE POLE SWITCHES, WALL MOUNTED. SUBSCRIPTS AT SYMBOL INDICATE THE FOLLOWING:

2 – DOUBLE POLE	LV – LOW VOLTAGE	RL – ROTARY LOCK KEY TYPE
3 – THREE WAY	P – PILOT LIGHT	PB – PUSHBUTTON
4 – FOUR WAY	R – REMOTE CONTROL	S – PROJECTION SCREEN
K – KEY OPERATED	M – MOTOR STARTING	

a, b, c, ETC. – DESIGNATES QUANTITY OF SWITCHES AT EACH LOCATION.

NOTE: ALL WALL SWITCHES CONTROLLING EMERGENCY CIRCUITS SHALL BE ENGRAVED WITH "EMERGENCY".

H — EMERGENCY POWER OFF STATION, WALL MOUNTED PER EPO SYSTEM DETAIL.

PB, OR P — PULLBOX, SIZED PER N.E.C. OR AS NOTED.

WALL MOUNTED DEVICE MOUNTING HEIGHT NOTE:

ALL WALL-MOUNTED EQUIPMENT MOUNTING HEIGHTS SHALL BE VERIFIED PRIOR TO ROUGH-IN PER REQUIREMENTS OF THE DEVICE ALIGNMENT AND MOUNTING HEIGHT DETAILS AND SPECIFICATIONS.

IDENTIFICATION STAMP
DIV. OF THE STATE ARCHITECT
APP: 01-120592 INC:
REVIEWED FOR
SS ☑ FLS ☑ ACS ☑
DATE: 7/11/2023

OWNER: San Rafael City Schools

PROJECT NAME: Venetia Valley School Middle School Restroom Addition

CLIENT ADDRESS: Enter address here

REGISTERED PROFESSIONAL ENGINEER RAYMOND W. SWIFT 15610 Ex. 12/31/2023 ELECTRICAL STATE OF CALIFORNIA

REVISIONS:

	DESCRIPTION	DATE
△		
△		
△		
△		
△		
△		
△		
△		
△		
△		

PROJECT NO:	Project Number
DATE ISSUED:	Issue Date
SCALE:	As indicated

E0.01

SYMBOLS LIST

tk1sc COLLABORATIVE
11870 Pierce Street, Suite 160
Riverside, California 92505
951.299.4160 www.tk1sc.com

Project Leader - Bill Voller
Electrical Lead - Nikolas Bruno
tk1sc Job #: B2203109.000

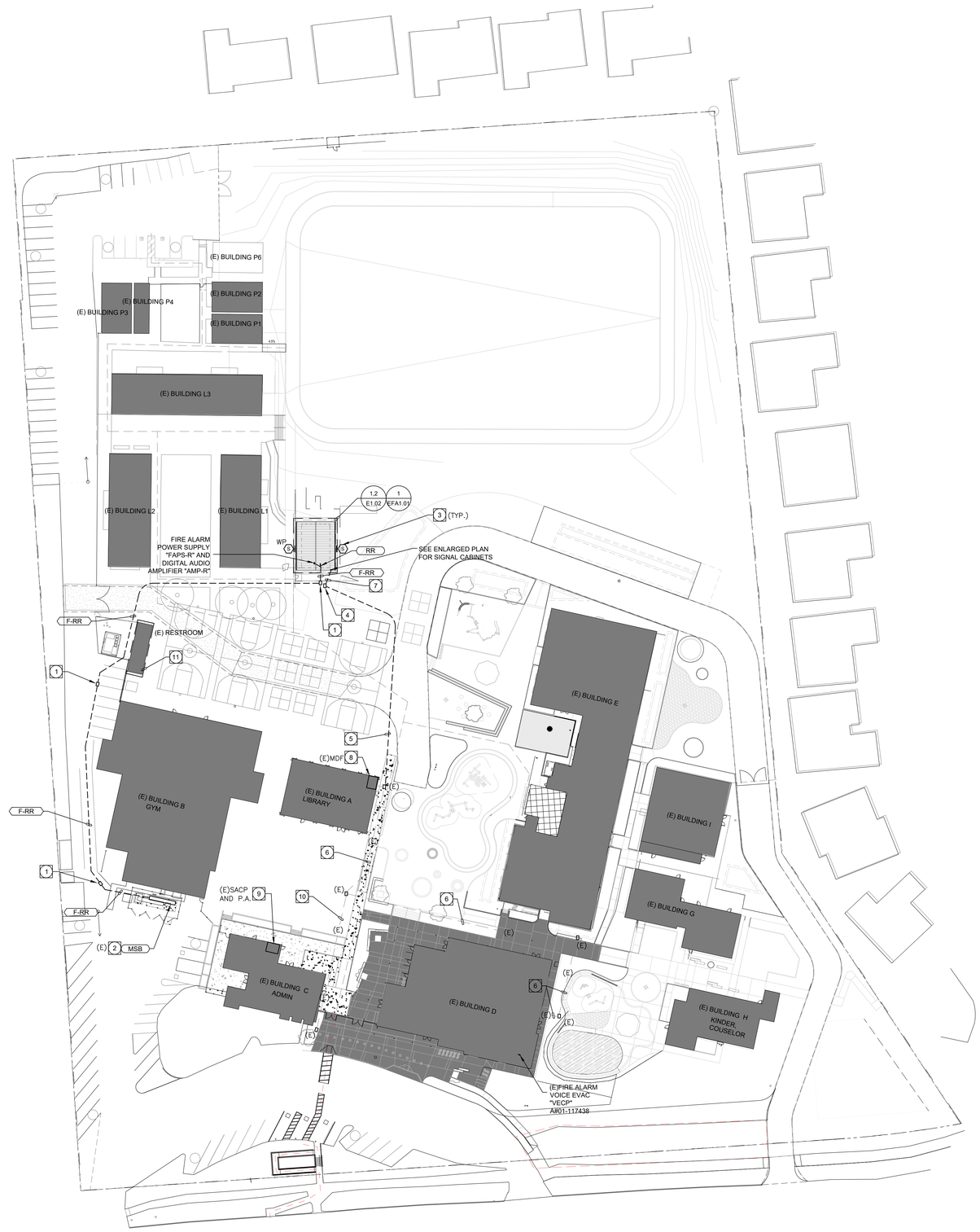

PLAN NOTES:

1. FURNISH AND INSTALL NEW 4'x4'xDEPTH AS REQUIRED IN-GRADE PULL BOX WITH TRAFFIC RATED COVER LABELED 'POWER'. MOUNT FLUSH TO FINISHED GRADE.
2. EXISITING 2500A 120/208V 3ø 4W PG&E SERVICE TO BE PROTECTED IN PLACE.
3. EXTERIOR 2W SPEAKER. SEE FIRE ALARM PLANS FOR MORE INFORMATION.
4. FURNISH AND INSTALL NEW 2'x3'xDEPTH AS REQUIRED IN-GRADE PULL BOX WITH TRAFFIC RATED COVER LABELED "SIGNAL". MOUNT FLUSH TO FINISHED GRADE.
5. PROVIDE THE FOLLOWING SIGNAL SYSTEM CONDUITS WITH SPECIFIED SYSTEM CONDUCTORS, U.O.N.:
   (1)2"C. FA, (1)3"C. P.A., (1)3"C. SECURITY, (1)3"C. LAN-FIBER, (1)2"C.O. SPARE
6. EXISTING SIGNAL CONDUIT TO BE INTERCEPTED AND REUSED. PROVIDE WITH SYSTEM CONDUCTORS:
   (1)2"C. FA, (1)2"C. P.A., (1)2"C. SECURITY
7. PROVIDE THE FOLLOWING SIGNAL SYSTEM CONDUITS WITH CONDUCTORS:
   (1)2"C. FA, (1)2"C. P.A., (1)2"C. SECURITY, (1)2"C. LAN-FIBER, (1)2"C.O. SPARE
8. EXISTING LAN MDF RACK/CABINET. TERMINATE NEW FIBER OPTIC CABLE IN MDF RACK/CABINET. REFER TO LAN SYSTEM DIAGRAM FOR ADDITIONAL REQUIREMENTS. MDF LOCATION SHOWN IS APPROXIMATE. VERIFY ACTUAL LOCATION IN FIELD.
9. EXISTING PUBLIC ADDRESS SYSTEM HEADEND, AND SECURITY ALARM CONTROL PANEL LOCATION. REFER TO PA SYSTEM DIAGRAM AND SECURITY ALARM SYSTEM DIAGRAM FOR ADDITIONAL REQUIREMENTS. LOCATION SHOWN IS APPROXIMATE. VERIFY ACTUAL LOCATION IN FIELD.
10. EXISTING SIGNAL CONDUIT TO BE INTERCEPTED AND REUSED. PROVIDE WITH SYSTEM CONDUCTORS:
    (1)2"C. P.A., (1)2"C. SECURITY
11. EXISTING RESTROOM RELO TO BE REMOVED. EXISTING CONDUIT TO BE CAPPED AND ABANDONED.

SITE PLAN GENERAL NOTES:

1. CONTRACTOR SHALL EXERCISE EXTREME CAUTION IN EXCAVATING AND TRENCHING ON THIS SITE TO AVOID EXISTING DUCTS, PIPING OR CONDUITS, ETC., AND TO PREVENT HAZARDS TO PERSONNEL AND/OR DAMAGE TO EXISTING UNDERGROUND UTILITIES OR STRUCTURES WHETHER OR NOT SHOWN AND INSTALLED BY ANY OTHER CONTRACTS. THE ENGINEER IS NOT RESPONSIBLE FOR THE LOCATION OF UNDERGROUND UTILITIES OR STRUCTURES WHETHER OR NOT SHOWN OR DETAILED AND INSTALLED BY ANY OTHER CONTRACTS. THE CONTRACTOR SHALL IMMEDIATELY NOTIFY THE ENGINEER SHOULD SUCH UNIDENTIFIED CONDITIONS BE DISCOVERED. THESE DRAWINGS AND SPECIFICATIONS DO NOT INCLUDE THE NECESSARY ELEMENTS FOR CONSTRUCTION SAFETY.
2. CALL UNDERGROUND SERVICE ALERT (USA) AT 1 (800) 422-4133 OR APPLICABLE STATE AND LOCAL DIG SAFE OR UNDERGROUND ALERT HOTLINES PRIOR TO CONSTRUCTION START.
3. MINIMUM CONDUIT SIZE SHALL BE 3/4" - U.O.N.
4. MINIMUM CONDUCTOR SIZE SHALL BE #10 AWG. - U.O.N.
5. ALL SITE BRANCH CIRCUITS SHALL INCLUDE AN EQUIPMENT GROUND CONDUCTOR THAT, AT MINIMUM, MATCHES THE SIZE OF THE ASSOCIATED BRANCH CIRCUIT CONDUCTOR. WHERE MULTIPLE BRANCH CIRCUITS ARE ROUTED/GROUPED TOGETHER, THE EQUIPMENT GROUNDING CONDUCTOR SHALL MATCH THE SIZE OF THE LARGEST BRANCH CIRCUIT CONDUCTOR IN THE GROUP.
6. ALL ELECTRICAL EQUIPMENT MOUNTED OUTDOORS SHALL BE WEATHERPROOF (NEMA #3R).
7. ALL CONDUIT ONLY SHALL BE PROVIDED WITH A NYLON PULL STRING.
8. SEE ARCHITECTURAL/LANDSCAPE ARCHITECTURAL PLANS FOR EXACT LOCATIONS OF FIXTURES, PULLBOXES, MANHOLES, OTHER ELECTRICAL DEVICES, ETC. COORDINATE ALL UNDERGROUND STRUCTURES AND CONDUIT ROUTING WITH LANDSCAPE ARCHITECT PRIOR TO ROUGH-IN TO ENSURE THAT SUCH ITEMS ARE NOT PLACED IN CRITICAL LANDSCAPE PLANTING/HARDSCAPE AREAS.
9. UNLESS SPECIFICALLY SHOWN AS (E), (R), (ER), (D), EXISTING OR NON-BOLD, ALL ELECTRICAL DEVICES SHOWN ARE NEW.

ELECTRICAL SITE PLAN | 1" = 40'-0" | **1**

IDENTIFICATION STAMP
DIV. OF THE STATE ARCHITECT
APP: 01-120592 INC:
REVIEWED FOR
SS ☑ FLS ☑ ACS ☑
DATE: 7/11/2023

OWNER: San Rafael City Schools

PROJECT NAME: Venetia Valley School Middle School Restroom Addition

CLIENT ADDRESS: Enter address here

REGISTERED PROFESSIONAL ENGINEER
RAYMOND W. SINAZER
No. 15610
Exp. 12/31/2023
ELECTRICAL
STATE OF CALIFORNIA

REVISIONS:

	DESCRIPTION	DATE
1		
2		
3		
4		
5		
6		
7		
8		
9		
10		
11		

PROJECT NO:	Project Number
DATE ISSUED:	Issue Date
SCALE:	As indicated

E1.01

SITE PLAN

tk1sc COLLABORATIVE
11870 Pierce Street, Suite 160
Riverside, California 92505
951.299.4160 www.tk1sc.com

Project Leader - Bill Voller
Electrical Lead - Nikolas Bruno
tk1sc Job #: B2203109.000

MOTORIZED EQUIPMENT SCHEDULE

ITEM	DESCRIPTION	EQUIPMENT RATING								DISC. SW. SIZE STARTER SIZE	CIRCUIT DATA CONDUIT – WIRE	SPECIFIC NOTES
				MOTOR		VFD						
		VOLTS	PH.	HP	FLA	FLA	MCA	MOCP	SCCR			
EF 1	EXHAUST FAN –	115	1	.16	4.4	–	5.5	15	–	$_m	3/4"C.–2#12,1#12GND –	–
EF 2	EXHAUST FAN –	115	1	.16	4.4	–	5.5	15	–	$_m	3/4"C.–2#12,1#12GND –	–
EF 3	EXHAUST FAN –	115	1	(14W)	–	–	–	15	–	$_m	3/4"C.–2#12,1#12GND –	–

POWER PLAN GENERAL NOTES:

1. ALL RECEPTACLES ON COMMON WALLS SHALL BE SEPARATE BOXES AND OFFSET 24–INCHES MINIMUM.
2. ALL PENETRATIONS THROUGH FIRE RATED WALLS SHALL BE PROTECTED FROM THE SPREAD OF FIRE WITH AN APPROVED FIRESTOP SYSTEM EQUAL OR GREATER THAN THE FIRE RATING OF THE WALL.
3. ALL WALL–MOUNTED DEVICE HEIGHTS SHALL BE VERIFIED WITH THE ARCHITECT PRIOR TO ROUGH–IN.
4. ALL FURNITURE FEED LOCATIONS TO BE VERIFIED WITH ARCHITECT AND FURNITURE VENDOR PRIOR TO ROUGH–IN.
5. ALL FURNITURE WHIPS SHALL BE TRIMMED TO REDUCE EXCESS WHIP LENGTH.
6. WHEN EXPOSED CEILINGS OR OPEN GRID CONDITIONS OCCUR, THE CONTRACTOR WILL NEED TO PROVIDE THE FOLLOWING ITEMS:
   a. ALL BRANCH CIRCUITS SHALL BE EMT.
   b. ALL BRANCH CIRCUITS SHALL BE ROUTED ORTHOGONALLY, NEATLY TRAINED, IN PARALLEL TO STRUCTURES OR DUCTWORK. THE TERM "TRAINED" MEANS ALL PARALLEL CONDUITS SHALL MAINTAIN THE SAME SPATIAL RELATIONSHIP WITH EACH OTHER FOR ENTIRE RUN TO INCLUDE RADIUS BENDS AND SWEEPS.
   c. VISUALLY OBJECTIONABLE BRANCH CIRCUITS WILL BE REROUTED AT THE REQUEST OF THE ARCHITECT AT NO ADDITIONAL COST.
7. EXPOSED CABLE/CONDUCTORS INSTALLED IN A PLENUM SPACE SHALL CONFORM TO NEC, OR CEC WHERE ADOPTED, **ARTICLE 300.22(C)**.
8. PROVIDE G.F.C.I. TYPE RECEPTACLE(S) OR RECEPTACLE(S) PROTECTED BY A GFCI CIRCUIT BREAKER(S) WHEN RECEPTACLES ARE 50A OR LESS, 150V TO GROUND OR LESS AND ARE LOCATED WITHIN 6–FEET OF ANY SINK OR THERAPEUTIC TUB, LAUNDRY AREA, SERVING ANY DRINKING FOUNTAIN OR VENDING MACHINE, WITHIN ANY KITCHEN SPACE, LOCKER ROOM AREA, GARAGE AND BATHROOM SPACE AND/OR LOCATED OUTDOORS. WHERE RECEPTACLES ARE NOT READILY ACCESSIBLE, PROVIDE GFCI CIRCUIT BREAKER(S) TO PROTECT THE RESPECTIVE BRANCH CIRCUIT AND PROVIDE ADDITIONAL NEUTRAL CONDUCTORS IN THE BRANCH CIRCUITING AS REQUIRED TO ENSURE PROPER GFCI FUNCTION.
9. PROVIDE OCCUPANCY SENSOR/LIGHTING CONTROL SYSTEM CONTROLLED RECEPTACLE RELAY(S) AS REQUIRED TO SWITCH CONTROLLED RECEPTACLES. CONNECT BRANCH CIRCUITRY AND CONTROL WIRING AS REQUIRED TO ALLOW OCCUPANCY SENSOR/LIGHTING CONTROL SYSTEM RELAY TO SWITCH STANDALONE AND/OR SYSTEMS FURNITURE CONTROLLED RECEPTACLES AS INDICATED ON PLANS. PROVIDE ADDITIONAL CONDUIT, WIRING AND PATHWAYS NECESSARY TO CONNECT BRANCH CIRCUITRY AND CONTROL WIRING TO REMOTE RELAYS TO INCLUDE RELAY(S) LOCATED ON ALTERNATE FLOORS, IN ELECTRICAL ROOMS, ETC.
10. PROVIDE ADDITIONAL J–BOX NEAR PANEL FOR MULTIPLE HOMERUN CIRCUITRY.
11. UNLESS SPECIFICALLY SHOWN AS (E), (R), (ER), (D), EXISTING OR NON–BOLD, ALL ELECTRICAL DEVICES SHOWN ARE NEW.

COMMUNICATIONS PATHWAYS GENERAL NOTES:

1. CONDUITS SHALL (a) CONTAIN NO CONTINUOUS SECTIONS LONGER THAN 30M (98 FT.), AND (b) CONTAIN NO MORE THAN (2) 90° BENDS OR (1) REVERSE BEND WITHOUT INSTALLING A PULL BOX. SPLIT CONDUITS IN PLACE OF PULL BOXES ARE UNACCEPTABLE.
2. CONDUITS SHALL CONTAIN PLASTIC OR NYLON PULL TAPE RATED AT 200 LBS. WITH A MINIMUM OF 5 FEET OF EXTRA PULL TAPE COILED AT EACH END.
3. CONDUIT BEND RADIUS SHALL BE (a) A MINIMUM OF 6 TIMES THE INTERNAL CONDUIT DIAMETER FOR CONDUITS 2–INCHES IN DIAMETER OR LESS, AND (b) 10 TIMES THE INTERNAL CONDUIT DIAMETER FOR CONDUITS MORE THAN 2–INCHES IN DIAMETER.
4. TERMINATE CONDUIT STUBS AND SLEEVES THAT PROTRUDE THROUGH STRUCTURAL FLOORS 2–INCHEST TO 3–INCHES ABOVE THE FLOOR SURFACE.
5. INSTALL BUSHINGS OR BELL ENDS AS REQUIRED ON ALL CONDUITS.
6. FLEX CONDUIT IS UNACCEPTABLE FOR USE AS A COMMUNICATIONS CONDUIT EXCEPT AT SEISMIC JOINTS AND/OR IF APPROVED IN WRITING BY THE ENGINEER.
7. ALL UNDER SLAB OR IN–SLAB CONDUITS SHALL BE INSTALLED IN A MANNER THAT PREVENTS WATER INFILTRATION OF THE CONDUIT. IT IS THE CONTRACTOR'S RESPONSIBILITY TO ENSURE GROUND WATER, RAIN WATER OR CONSTRUCTION WATER IS PREVENTED FROM ENTERING AND/OR REMOVED FROM THE CONDUITS PRIOR TO PLACEMENT OF COMMUNICATIONS CABLES. SEE ELECTRICAL SPECIFICATIONS, DETAILS AND PLANS FOR ADDITIONAL CONDUIT SEALING REQUIREMENTS.
8. ALL PULL BOXES SHALL BE SIZED AND INSTALLED PER ANSI–TIA–569–C. PULL BOXES FOR IN/UNDER SLAB CONDUIT RUNS ARE NOT PERMITTED UNLESS OTHERWISE NOTED. PULL BOXES FOR OVERHEAD CONDUIT RUNS SHALL BE LOCATED ABOVE ACCESSIBLE CEILINGS WITHIN THE ACCESSIBLE CEILING SPACE AND SUPPORTED INDEPENDENTLY FROM THE STRUCTURE AND CONDUIT SUPPORTS. PULL BOXES FOR ROOF MOUNTED OR EXTERIOR ABOVE GRADE APPLICATIONS SHALL BE NEMA 3R RATED. PULL BOXES SHALL BE SIZED ACCORDING TO THE FOLLOWING:

CONDUIT SIZE	WIDTH	LENGTH	DEPTH	WIDTH INCREASE PER ADDITIONAL CONDUIT
1"	4"	16"	3"	2"
2"	8"	36"	4"	5"
3"	12"	48"	5"	6"
4"	15"	60"	8"	8"

   FOR OTHER CONDUIT SIZES REFER TO ANSI/TIA–569–C TABLE 12. – LATEST PUBLISHED EDITION.
9. CONDUIT(S) SHALL EXIT A PULL BOX ON THE WALL OPPOSITE THE WALL ENTERED.
10. PROVIDE LABELING OF EACH CONDUIT PER GENERAL ELECTRICAL SPECIFICATIONS.
11. PROVIDE INTERNAL/EXTERNAL GAS AND WATER TIGHT MECHANICAL SEALING/PLUGGING OF EACH BUILDING ENTRY CONDUIT AS SPECIFIED ELSEWHERE IN THE DRAWINGS AND SPECIFICATIONS.

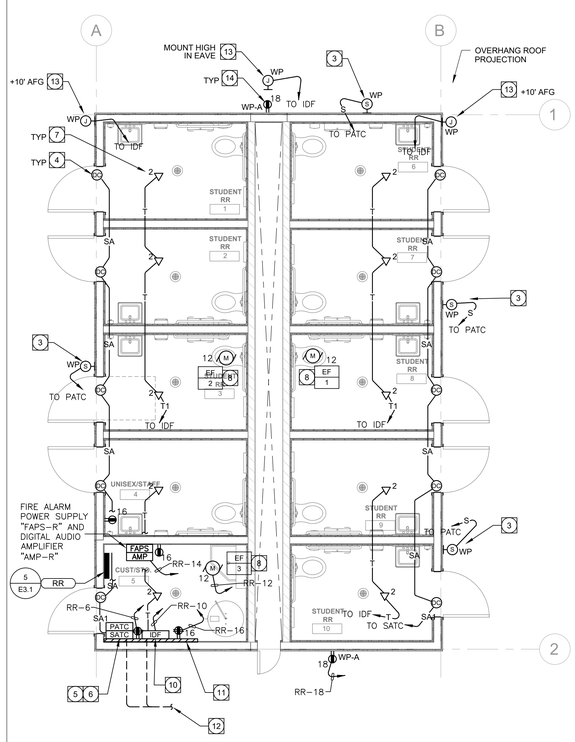

MS RESTROOM FLOOR PLAN 1/4" = 1'-0" 1

PLAN NOTES:

1. PROVIDE CONNECTION FOR HAND DRYER. VERIFY CONNECTION REQUIREMENTS WITH MANUFACTURER INSTALLATION INSTRUCTIONS.
2. CONNECT TO EXISTING MODULAR BUILDING PANELBOARD PER MANUFACTURER'S REQUIREMENTS. VERIFY EXACT LOCATION. REFERENCE DETAIL 5 SHEET E3.1 FOR GROUNDING REQUIREMENTS.
3. EXTERIOR FLUSH MOUNTED PUBLIC ADDRESS SYSTEM SPEAKER WITH BACKBOX AND CONDUCTORS, PER SPECIFICATIONS. REFER TO PUBLIC ADDRESS SYSTEM DIAGRAM AND DETAIL 3 SHEET E3.02 FOR MORE INFORMATION.
4. FLUSH DOOR CONTACTS AND CONDUCTORS, PER INTRUSION ALARM SYSTEM SPECIFICATIONS. REFER TO INTRUSION ALARM SYSTEM DIAGRAM AND DETAIL 2 SHEET E3.02 FOR MORE INFORMATION.
5. SECURITY TERMINAL CABINET COMPLETE WITH POPITS, TERMINAL BLOCKS, POWER SUPPLY ETCETERA AS REQUIRED FOR A COMPLETE AND FULLY FUNCTIONAL SYSTEM. REFER TO SECURITY BLOCK DIAGRAM FOR MORE INFORMATION.
6. PUBLIC ADDRESS SYSTEM TERMINAL CABINET 18"X18"x8" COMPLETE WITH TERMINAL BLOCKS, AMPLIFIER, ETCETERA AS REQUIRED FOR A COMPLETE AND FULLY FUNCTIONAL SYSTEM. REFER TO PUBLIC ADDRESS SYSTEM DIAGRAM FOR MORE INFORMATION.
7. FLUSH CEILING MOUNTED 4S DEEP BOX WITH BLANK WEATHERPROOF COVER, CONSISTING OF A 2–PORT SURFACE MOUNT OUTLET BOX AND 2 CAT–6 OSP–RATED DATA CABLES/JACKS FOR FUTURE VAPE SENSOR. REFER TO DETAIL 1/E3.02. ROUTE AND TERMINATE CAT–6 CABLES IN IDF CABINET. REFER TO LAN NETWORK DIAGRAM FOR MORE INFORMATION.
8. REFER TO MOTORIZED EQUIPMENT SCHEDULE FOR MOTOR FEEDER/ BRANCH CIRCUIT INFORMATION.
9. PROVIDE 3/4"C.O.(S) TO RESPECTIVE CONTROL DEVICE(S) FOR CONTROL WIRING. REFER TO THE EQUIPMENT CONTROL WIRING DIAGRAMS FOR ADDITIONAL INFORMATION.
10. PROVIDE WALL MOUNTED LOW PROFILE LAN CABINET 24"W X 40"H X 10"D HUBBELL #RE4 WITH LOCKABLE DOOR, COMPLETE WITH FIBER ENCLOSURE, 24–PORT CAT–6 PATCH PANEL, ETCETERA COMPLETE. PROVIDE (1) 1–FOOT CAT–6 PATCH CORD FOR EACH CAT–6 CABLE TERMINATED. ETHERNET SWITCH IS OWNER FURNISHED CONTRACTOR INSTALLED. MOUNT +72" TO TOP OF CABINET. REFER TO LAN BLOCK DIAGRAM FOR MORE INFORMATION.
11. PAINTED PLYWOOD BACKBOARD 8'H X 4'W X 3/4"D, MOUNT 6" AFF.
12. REFER TO SITE PLAN FOR UNDERGROUND LOW VOLTAGE CONDUITS. STUB 2–2"C INTO THE "TC", THE REMAINING CONDUITS INTO THEIR RESPECTIVE TERMINAL CABINETS.
13. 4S DEEP WEATHERPROOF BOX WITH BLANK COVER AND DATA OUTLET FOR FUTURE OFCI CAMERA. REFER TO DETAIL 6/E3.02. MOUNT HIGH ON WALL. COORDINATE IN FIELD.
14. VANDAL RESISTANT RECEPTACLE LOCK BOX BY VANDAL STOP. #AA–EB–6R.

ROOF PLAN GENERAL NOTES:

1. ELECTRICAL CONTRACTOR SHALL REFER TO MECHANICAL/PLUMBING AND ARCHITECTURAL DRAWINGS FOR EXACT LOCATIONS AND CHARACTERISTICS OF ALL EQUIPMENT LISTED IN SCHEDULE. ANY MODIFICATIONS AND/OR ADDITIONAL WORK NECESSARY SHALL BE INCLUDED IN THE BASE BID.
2. ALL TEMPERATURE CONTROL AND INTERLOCK CONDUIT AND WIRING SHALL BE BY ELECTRICAL CONTRACTOR UNLESS OTHERWISE NOTED. SEE MECHANICAL/PLUMBING DRAWINGS FOR ALL INFORMATION.
3. ELECTRICAL CONTRACTOR SHALL VERIFY THE EXACT LOCATION OF ALL CONNECTION POINTS WITH THE EQUIPMENT INSTALLER PRIOR TO ROUGH-IN.
4. ELECTRICAL CONTRACTOR SHALL PROVIDE LOCAL REMOTE DISCONNECTING MEANS FOR ALL ELECTRIC HEATING EQUIPMENT IF REQUIRED BY THE LOCAL ELECTRICAL CODE.
5. ELECTRICAL CONTRACTOR SHALL COORDINATE THE ROUTING OF CONDUIT/WIRING TO ROOF-MOUNTED EQUIPMENT WITH EQUIPMENT INSTALLER PRIOR TO ROUGH-IN. WHERE ROOF-MOUNTED EQUIPMENT IS MANUFACTURED TO BE FED FROM WITHIN MECHANICAL CURB ASSEMBLY - SEPARATE ROOF PENETRATIONS FOR WIRING CONNECTIONS SHALL NOT BE PERMITTED. ALL WIRING SHALL BE BELOW THE ROOF IN AN ACCESSIBLE CEILING SPACE LOCATION.
6. ALL ROOF MOUNTED EQUIPMENT SHALL BE NEMA 3R RATED.
7. UNLESS SPECIFICALLY SHOWN AS (E), (R), (ER), (D), EXISTING OR NON-BOLD, ALL ELECTRICAL DEVICES SHOWN ARE NEW.

MOTORIZED EQUIPMENT SCHEDULE GENERAL NOTES:

1. ALL BRANCH CIRCUIT DATA IS BASED UPON METALLIC CONDUITS. IF THE CONTRACTOR ELECTS TO USE NONMETALLIC CONDUITS, AN EQUIPMENT GROUNDING CONDUCTOR SHALL BE INSTALLED PER NEC, OR CEC WHERE ADOPTED, TABLE 250.122 AND THE CONDUIT SIZE SHALL BE INCREASED ACCORDINGLY.
2. ELECTRICAL CONTRACTOR SHALL REFER TO ALL DOCUMENTS RELATED TO THE EQUIPMENT (I.E. SHOP DRAWINGS, CONSTRUCTION DOCUMENTS, ETC.) IN REGARDS TO ELECTRICAL CHARACTERISTICS OF ALL EQUIPMENT LISTED IN THE SCHEDULE. ANY MODIFICATION AND/OR ADDITIONAL WORK NECESSARY SHALL BE INCLUDED IN THE BASE BID.
3. ELECTRICAL CONTRACTOR SHALL CHECK THE ROTATION OF ALL THREE PHASE MOTORS AND CORRECT THE ROTATION IF REVERSED.
4. ELECTRICAL CONTRACTOR SHALL PROVIDE FUSES SIZED PER THE EQUIPMENT NAMEPLATE INFORMATION.
5. DISCONNECT SWITCHES SHALL BE HEAVY DUTY TYPE, EXTERNALLY OPERATED, QUICK MAKE QUICK BREAK AND SHALL BE FUSIBLE OR NON FUSIBLE AS INDICATED. A MAXIMUM VOLTAGE, CURRENT AND HORSEPOWER SHALL BE CLEARLY MARKED ON SWITCH ENCLOSURE. SWITCHES HAVING DUAL RATINGS (HIGHER RATINGS WHEN USED WITH DUAL ELEMENT FUSES) SHALL HAVE RATINGS INDICATED ON METAL PLATES RIVETED OR OTHERWISE PERMANENTLY ATTACHED TO THE ENCLOSURE. WHEN INDICATED, TOGGLE SWITCHES SHALL BE MOTOR RATED FOR THE APPLICATION.
6. STARTERS SHALL BE FULL VOLTAGE, REDUCED VOLTAGE OR COMBINATION DISCONNECT AND STARTER, WITH CONTROL VOLTAGE AS REQUIRED, AS INDICATED ON THE DOCUMENTS RELATED TO THE EQUIPMENT, SUCH AS SHOP DRAWINGS, CONSTRUCTION DOCUMENTS, ETC. STARTERS SHALL INCLUDE MOTOR OVERLOAD PROTECTION, PHASE LOSS AND PHASE UNBALANCE PROTECTION AS REQUIRED.
7. ALL TERMINATIONS AND ENCLOSURES SHALL BE RATED FOR USE WITH 75 DEGREE C CONDUCTORS.
8. COMPLETE INSTALLATION SHALL CONFORM TO THE REQUIREMENTS OF NEC (OR CEC WHERE ADOPTED) ARTICLES 430 AND 440.
9. CONTRACTOR TO COORDINATE WITH ALL OTHER PROJECT TRADES AND WITH OWNER/ TENANT FOR TO OBTAIN RESPECTIVE EQUIPMENT SCCR AND PROVIDE APPROPRIATE PROTECTIVE DEVICES TO LIMIT AVAILABLE FAULT CURRENT TO LESS THAN THE EQUIPMENT NAMEPLATE SCCR PER NEC (OR CEC WHERE ADOPTED) 110.10. SEE POWER SYSTEM STUDY SPECIFICATIONS FOR ADDITIONAL REQUIREMENTS.
10. UNLESS OTHERWISE NOTED, MOCP VALUES FOR VFD-EQUIPPED DEVICE ARE SIZED PER NEC (OR CEC WHERE ADOPTED) 430.130(A).1. CONTRACTOR SHALL COORDINATE WITH ALL OTHER PROJECT TRADES AND WITH OWNER/ TENANT (IF PROVIDING EQUIPMENT ON PROJECT) TO OBTAIN NAMEPLATE VFD-EQUIPPED DEVICE MOCP VALUE FROM MANUFACTURER INSTALLATION INSTRUCTIONS AND PROVIDE APPROPRIATE PROTECTIVE DEVICES TO COMPLY WITH NEC (OR CEC WHERE ADOPTED) 430.130(A).2.

IDENTIFICATION STAMP
DIV. OF THE STATE ARCHITECT
APP: 01-120592 INC:
REVIEWED FOR
SS ☑ FLS ☑ ACS ☑
DATE: 7/11/2023

OWNER: San Rafael City Schools

PROJECT NAME: Venetia Valley School Middle School Restroom Addition

CLIENT ADDRESS: Enter address here

REGISTERED PROFESSIONAL ENGINEER
RAYMOND W. SINNETT
No. E 15610
Exp. 12/31/2023
ELECTRICAL
STATE OF CALIFORNIA

REVISIONS:

	DESCRIPTION	DATE
1		
2		
3		
4		
5		
6		
7		
8		
9		
10		

PROJECT NO: Project Number

DATE ISSUED: Issue Date

SCALE: As indicated

E1.02

ENLARGED PLANS

tk1sc COLLABORATIVE
11870 Pierce Street, Suite 160
Riverside, California 92505
951.299.4160 www.tk1sc.com

Project Leader - Bill Voller
Electrical Lead - Nikolas Bruno
tk1sc Job #: B2203109.000

PLAN NOTES:

1. EXTERIOR LIGHTING TO BE CONTROLLED BY TIMECLOCK AND PHOTOCELL. TO BE COORDINATED WITH THE REST OF THE CAMPUS LIGHTING.

LIGHTING PLAN GENERAL NOTES:

1. REFER TO ARCHITECTURAL PLANS FOR EXACT LOCATION AND ELEVATION OF ALL LIGHTING FIXTURES AND ALL DEVICES. ALL WALL-MOUNTED DEVICE HEIGHTS SHALL BE VERIFIED WITH THE ARCHITECT PRIOR TO ROUGH-IN.
2. VERIFY EXACT CEILING CONSTRUCTION WITH ARCHITECTURAL REFLECTED CEILING PLAN AND SPECS. PROVIDE LIGHTING FIXTURES WITH ALL NECESSARY MOUNTING HARDWARE.
3. ALL RECESSED FIXTURES SHALL BE PROVIDED WITH ALL STRUCTURAL SUPPORTS AS REQUIRED BY THE IBC, OR CBC WHERE ADOPTED, IN ADDITION TO ANY LOCAL CODES.
4. ALL PERIMETER AND COVE LIGHTING SHALL EXTEND THE FULL LENGTH OF THE WALLS OR COVE. CONTRACTOR TO FIELD MEASURE COVE LENGTH AND ORDER QUANTITY OF FIXTURES AS REQUIRED.
5. ALL LINE VOLTAGE DIMMING BRANCH CIRCUITS SHALL BE PROVIDED WITH A DEDICATED NEUTRAL CONDUCTOR FOR EACH ZONE/CHANNEL.
6. RECESSED FIXTURES LOCATED IN A FIRE-RATED CEILING OR WALL SHALL BE PROVIDED WITH A 5-SIDED, RATED ENCLOSURE SO CONSTRUCTED AS TO ALLOW CODE AND MANUFACTURER-REQUIRED CLEARANCES BETWEEN THE FIXTURE AND THE ENCLOSURE.
7. REFER TO ARCHITECTURAL REFLECTED CEILING PLANS FOR EXIT SIGN CHEVRONS AND NUMBER OF FACES PER EXIT SIGN. ANY DISCREPANCIES BETWEEN EXIT SIGNS SHOWN ON THE ELECTRICAL AND ARCHITECTURAL PLANS SHALL BE BROUGHT TO THE ATTENTION OF THE ARCHITECT PRIOR TO ORDERING EXIT SIGNS.
8. WHEN EXPOSED CEILINGS OR OPEN GRID CONDITIONS OCCUR, THE CONTRACTOR WILL NEED TO PROVIDE THE FOLLOWING ITEMS:
   a. ALL BRANCH CIRCUITS SHALL BE EMT.
   b. ALL BRANCH CIRCUITS SHALL BE ROUTED ORTHOGONALLY, NEATLY TRAINED, IN PARALLEL TO STRUCTURES OR DUCTWORK. THE TERM "TRAINED" MEANS ALL PARALLEL CONDUITS SHALL MAINTAIN THE SAME SPATIAL RELATIONSHIP WITH EACH OTHER FOR ENTIRE RUN TO INCLUDE RADIUS BENDS AND SWEEPS.
   c. VISUALLY OBJECTIONABLE BRANCH CIRCUITS WILL BE REROUTED AT THE REQUEST OF THE ARCHITECT AT NO ADDITIONAL COST.
9. ALL LED REMOTE INDICATORS FOR DUCT DETECTORS AND FIRE/SMOKE DAMPERS REQUIRED BY THE LOCAL AHJ SHALL BE LOCATED IN CEILINGS IN COORDINATION WITH ARCHITECT PRIOR TO ANY ROUGH-IN.
10. PROVIDE ADDITIONAL J-BOX NEAR PANEL FOR MULTIPLE HOMERUN CIRCUITRY.
11. UNLESS SPECIFICALLY SHOWN AS (E), (R), (ER), (D), EXISTING OR NON-BOLD, ALL ELECTRICAL DEVICES SHOWN ARE NEW.
12. REFER TO GENERAL POWER PLAN NOTES AND COMMUNICATIONS PATHWAYS GENERAL NOTE FOR ADDITIONAL REQUIREMENTS WHEN POWER AND/OR DATA DEVICES ARE SHOWN ON THIS PLAN.
13. ALL PENETRATIONS THROUGH FIRE RATED WALLS SHALL BE PROTECTED FROM THE SPREAD OF FIRE WITH AN APPROVED FIRESTOP SYSTEM EQUAL OR GREATER THAN THE FIRE RATING OF THE WALL.

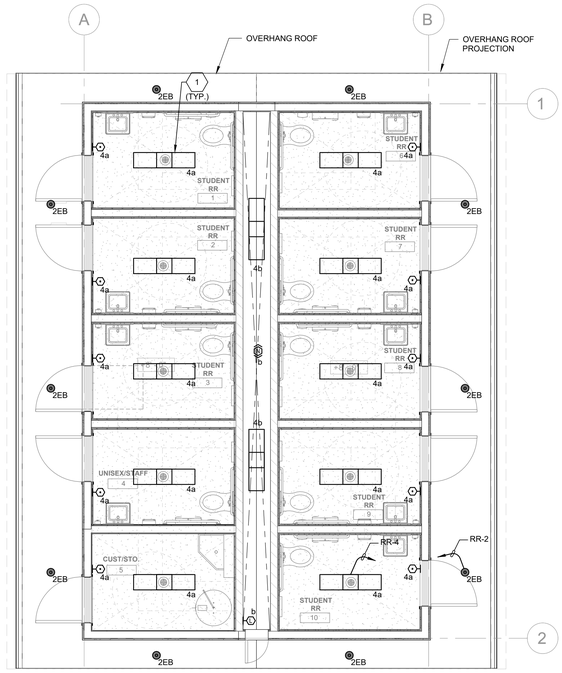

MS RESTROOM LIGHTING PLAN 1/4" = 1'-0" **1**

IDENTIFICATION STAMP
DIV. OF THE STATE ARCHITECT
APP: 01-120592 INC:
REVIEWED FOR
SS ☑ FLS ☑ ACS ☑
DATE: 7/11/2023

OWNER: San Rafael City Schools

PROJECT NAME: Venetia Valley School Middle School Restroom Addition

CLIENT ADDRESS: Enter address here

REGISTERED PROFESSIONAL ENGINEER
RAYMOND W. SINNOTT
No. E 15610
Exp. 12/31/2023
ELECTRICAL
STATE OF CALIFORNIA

REVISIONS:

	DESCRIPTION	DATE
1		
2		
3		
4		
5		
6		
7		
8		
9		
10		

PROJECT NO: Project Number
DATE ISSUED: Issue Date
SCALE: As indicated

E1.03

LIGHTING PLAN

tk1sc COLLABORATIVE
11870 Pierce Street, Suite 160
Riverside, California 92505
951.299.4160 www.tk1sc.com

Project Leader - Bill Voller
Electrical Lead - Nikolas Bruno
tk1sc Job #: B2203109.000

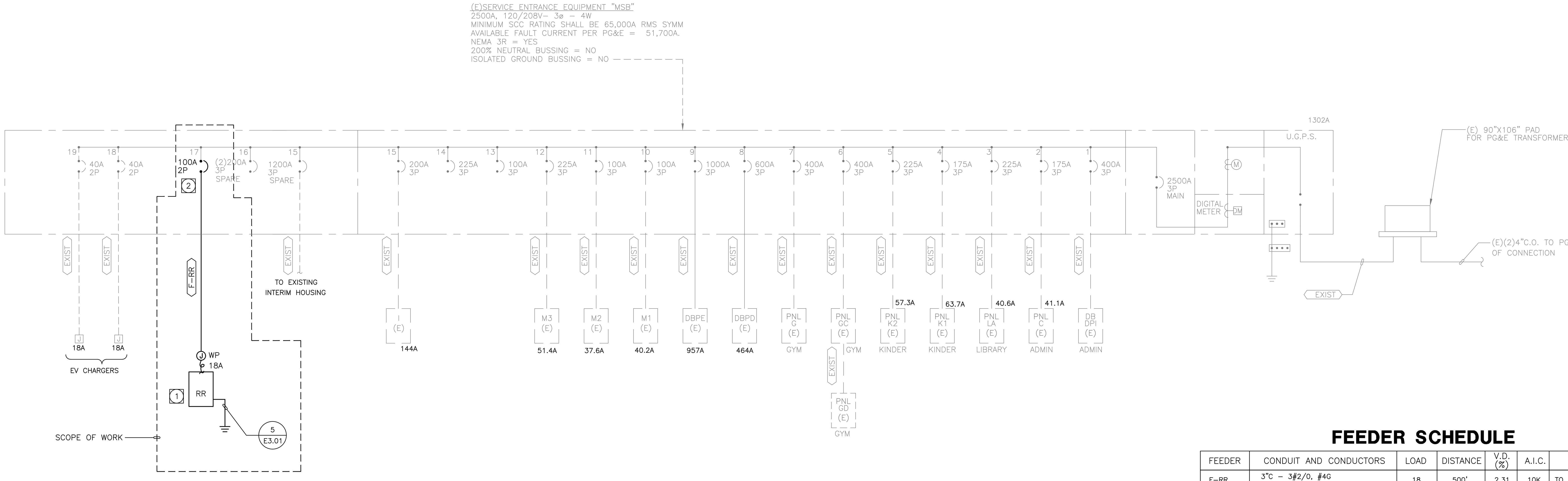

EXISTING SINGLE LINE DISTRIBUTION DIAGRAM

1

FEEDER SCHEDULE

FEEDER	CONDUIT AND CONDUCTORS	LOAD	DISTANCE	V.D. (%)	A.I.C.	NOTES
F–RR	3"C – 3#2/0, #4G	18	500'	2.31	10K	TO PANELBOARD RR

SPECIFIC SINGLE LINE NOTES:

1. PROVIDE NEW PANELBOARD IN RESTROOM BUILDING
2. PROVIDE NEW CIRCUIT BREAKER MATCH EXISTING SWITCHBOARD BREAKER TYPE AND AIC RATING

GENERAL FEEDER SCHEDULE NOTES:

1. ALL FEEDERS SHOWN, UNLESS SPECIFICALLY NOTED OTHERWISE, ARE PRESUMED TO BE ROUTED IN METAL RACEWAYS. IF P.V.C. CONDUITS ARE UTILIZED, THE CONTRACTOR SHALL PROVIDE AN EQUIPMENT GROUND PER NEC, OR CEC WHERE ADOPTED, **TABLE 250.122** OR, WHERE REQUIRED, PROVIDE A MAIN BONDING JUMPER PER **TABLE 250.66** AND INCREASE THE CONDUIT SIZE ACCORDINGLY.
2. LOADS INDICATED WITH " ( ) " REPRESENT WORST CASE LOAD IN AMPS.
3. DISTANCE SHOWN IS FOR DESIGN PURPOSES ONLY. IT IS NOT A MATERIAL TAKEOFF.
4. VOLTAGE DROP VALUE INDICATED IS AT THE END OF THE FEEDER.
5. AVAILABLE FAULT CURRENT VALUE AT THE END OF THE FEEDER INDICATED. CALCULATIONS ARE BASED UPON INITIAL VALUES RECEIVED FROM THE SERVING UTILITY AND THE LENGTH AND IMPEDANCE OF THE FEEDER.

PANEL RR — RELOCATABLE RESTROOM BUILDING

MOUNTING: RECESSED | DOUBLE LUG: NO | VOLTS: 120/208 | MAIN: 100A
NEMA 3R: YES | 200% NEUTRAL: NO | PHASE: 1 | BUS: 100A
FEED THRU: NO | I/G BUS: NO | WIRE: 3 | A.I.C.: 10,000

NOTES	LOCATION	A	B	LTG	CONV	KIT	RECP	MISC	BKR	CIRC	CIRC	BKR	MISC	RECP	KIT	CONV	LTG	A	B	LOCATION	NOTES
	HAND DRYER 1	750			1				20/1	1	2	20/1	6					180		EXTERIOR LTS	
	HAND DRYER 2		750		1				20/1	3	4	20/1					12		384	INTERIOR LTS	
	HAND DRYER 3	750			1				20/1	5	6	20/1		5				900		RR 1-5 RECEP	
	HAND DRYER 4		750		1				20/1	7	8	20/1		4					720	RR 6-9 RECEP	
	HAND DRYER 5	750			1				20/1	9	10	20/1						1000		(N)IDF	F
	HAND DRYER 6		750		1				20/1	11	12	15/1	3						1070	EF-1, EF-2, EF-3	
	HAND DRYER 7	750			1				20/1	13	14	20/1						500		(N)FAPS	AE
	HAND DRYER 8		750		1				20/1	15	16	20/1		4					720	CUST./STO. RECEP	
	HAND DRYER 9	750			1				20/1	17	18	20/1		2				360		EXTERIOR RECEP	
	SPARE								20/1	19	20	20/1								SPARE	
	SPARE								20/1	21	22	20/1								SPARE	
	SPARE								20/1	23	24	20/1								SPARE	
	SPARE								20/1	25	26	20/1								SPARE	
	SPARE								20/1	27	28	20/1								SPARE	
	SPARE								20/1	29	30	20/1								SPARE	
	SPACE									31	32									SPACE	
	SPACE									33	34									SPACE	
	SPACE									35	36									SPACE	
	SPACE									37	38									SPACE	
	SPACE									39	40									SPACE	
	SPACE									41	42									SPACE	

A= 6690 VA | B= 5894 VA
PHASE A LCL= 0 VA | PHASE B LCL= 96 VA
PHASE A W/LCL= 6690 VA | PHASE B W/LCL= 5990 VA
TOTAL VA= 12584 | TOTAL LCL= 96 | TOTAL VA W/LCL= 12680
AMPS= **61** | HIGH PHASE AMPS= **56**

AS–BUILT PANEL DIRECTORY NOTE:

BRANCH CIRCUIT LOCATIONS NOTED WITH "(E)" INDICATE EXISTING CIRCUIT(S). THE IDENTITIES OF THESE CIRCUITS ARE BASED ON EXISTING PANEL DIRECTORIES AND/OR LIMITED AS–BUILT INFORMATION. CONTRACTOR SHALL FIELD VERIFY EACH BRANCH CIRCUIT AND PROVIDE COMPLETE, TYPED AS–BUILT PANEL DIRECTORIES AS REQUIRED THAT DISTINGUISH EACH CIRCUIT PER NEC, OR CEC WHERE ADOPTED, ART **408.1** AND **408.4**. COMPLETED DIRECTORIES SHALL BE SUBMITTED TO THE ELECTRICAL INSPECTOR PRIOR TO FINAL ELECTRICAL INSPECTION. INCLUDE ALL COSTS IN BID.

EXISTING CIRCUIT BREAKER NOTE:

PROVIDE BREAKER INTERLOCK WITH ADJACENT BREAKER(S) FOR ANY MULTI–WIRE BRANCH CIRCUIT. BREAKER INTERLOCK GROUPING SHALL BE BY BRANCH CIRCUIT GROUP (i.e. MULTIPLE CIRCUITS SHARING A COMMON NEUTRAL (NEC, OR CEC WHERE ADOPTED, **210.4(B)**,) COMMON YOKE (NEC, OR CEC WHERE ADOPTED, **210.7**) OR FURNITURE SYSTEM NEC OR CEC WHERE ADOPTED, **605.5** AND **605.7**).
WHERE AN EXISTING PANEL IS BEING ALTERED OR MODIFIED IN ANY WAY, CONTRACTOR SHALL INCLUDE ALL COSTS IN BASE BID TO ADD BREAKER INTERLOCKS TO EXISTING MULTI–WIRE BRANCH CIRCUITS BASED ON CONTRACTOR'S INVESTIGATION OF EXISTING CONDITIONS.

GENERAL PANEL SCHEDULE NOTES:

1. WHERE PANEL IS INDICATED TO INCLUDE FEED THRU LUGS, PROVIDE FEED THROUGH LUGS AT THE OPPOSITE END OF THE PANELBOARD FROM THE PANELBOARD MAIN LUGS.
2. WHERE PANEL IS INDICATED TO INCLUDE DOUBLE LUGS, PROVIDE A DOUBLE LUG KIT AT THE SAME END OF THE PANELBOARD AS THE PANELBOARD MAIN LUGS.
3. WHERE PANEL IS INDICATED TO INCLUDE 200% NEUTRAL, PROVIDE PANELBOARDS UL LISTED AS HAVING NEUTRAL BUSSES RATED TO CARRY 200 PERCENT OF THE CURRENT CARRYING CAPACITY OF THE PHASE BUSSING. OTHERWISE, NEUTRAL BUSSING TO BE FULL SIZE AND RECTANGULAR.
4. WHERE PANEL IS INDICATED TO INCLUDE AN I/G BUS, PROVIDE PANELBOARDS WITH AN ISOLATED GROUND BUS, DRILLED AND TAPPED FOR NUMBER OF ISOLATED GROUND CONDUCTORS SHOWN, AS WELL AS FOR ALL SPARES AND SPACES SHOWN ON THE PANELBOARD.
5. WHERE PANEL CIRCUIT BREAKER RATING IS SHOWN AS SERIES RATED, PROVIDE CIRCUIT BREAKERS IN PANELBOARD WHICH ARE SERIES RATED WITH THE UPSTREAM SYSTEM FOR THE AVAILABLE FAULT CURRENT. THE PANELBOARD SHALL BE MARKED WITH THE SERIES CONNECTED RATINGS, AS WELL AS ALL MARKING AS REQUIRED BY THE NEC, OR CEC WHERE ADOPTED, **240.86(B)**.
6. WHERE PANEL IS INDICATED AS RECESSED OR FLUSH MOUNTED, PROVIDE SPARE CONDUITS STUBBED UP INTO THE ACCESSIBLE CEILING SPACE. PROVIDE ONE (1) 3/4" CONDUIT ONLY FOR EACH THREE (3) SPARES OR SPACES, MINIMUM OF TWO (2). EACH CONDUIT SHALL BE TAGGED, CAPPED AND MARKED FOR FUTURE USE.
7. ALL BUSSING SHALL BE **TIN PLATED ALUMINUM.**
8. ALL CIRCUIT BREAKERS USED AS SWITCHES SHALL BE UL LISTED AND LABELED "SWD" FOR SWITCHING DUTY.
9. PROVIDE BREAKER INTERLOCK WITH ADJACENT BREAKER(S) FOR ANY MULTI–WIRE BRANCH CIRCUIT. BREAKER INTERLOCK GROUPING SHALL BE BY BRANCH CIRCUIT GROUP (i.e. MULTIPLE CIRCUITS SHARING A COMMON NEUTRAL (NEC, OR CEC WHERE ADOPTED, **210.4(B)**,) COMMON YOKE (NEC, OR CEC WHERE ADOPTED, **210.7**), OR FURNITURE SYSTEM NEC OR CEC WHERE ADOPTED, **605.5** AND **605.7**). WHERE AN EXISTING PANEL IS BEING ALTERED OR MODIFIED IN ANY WAY, CONTRACTOR SHALL INCLUDE ALL COSTS IN BASE BID TO ADD BREAKER INTERLOCKS TO EXISTING MULTI–WIRE BRANCH CIRCUITS BASED ON CONTRACTOR'S INVESTIGATION OF EXISTING CONDITIONS.
10. PROVIDE BREAKER LOCK OFF DEVICE ON ANY CIRCUIT BREAKER FEEDING A TRANSFORMER AS REQUIRED, PER NEC, OR CEC WHERE ADOPTED, **450.14**. WHERE AN EXISTING PANEL IS BEING ALTERED OR MODIFIED IN ANY WAY, CONTRACTOR SHALL INCLUDE ALL COSTS IN BASE BID TO ADD BREAKER LOCK–OFF DEVICES TO EXISTING TRANSFORMER CIRCUIT BREAKERS BASED ON CONTRACTOR'S INVESTIGATION OF EXISTING CONDITIONS.
11. ALL CIRCUIT BREAKERS SHALL BE BOLT–ON TYPE AND SHALL BE SUITABLE FOR 75 DEGREE AMPACITY CONDUCTORS.
12. PANELS SHALL BE OF THE DEAD FRONT SAFETY TYPE. PANELS SHALL BE MINIMUM 20" WIDE AND 5–3/4" DEEP UNLESS OTHERWISE NOTED ON PLAN.
13. COORDINATE WITH APPLICABLE TRADE TO INSURE RECESSED MOUNTED PANELBOARDS WILL SEAT FLUSH IN THE WALLS PROVIDED. PANEL TRIMS SHALL HAVE CONCEALED DOORS AND FASTENERS WITH FLUSH TYPE COMBINATION LOCK AND CATCH, TWO MILLED TYPE KEYS SUPPLIED WITH EACH PANEL. ALL LOCKS SHALL BE KEYED ALIKE AND EACH DOOR SHALL HAVE A PLASTIC COVERED DIRECTORY FRAME WITH A TYPED IDENTIFICATION CARD OF ALL CIRCUIT AND PANEL NUMBERS FOR BRANCH CIRCUIT PANELBOARDS.
14. UPON PROJECT COMPLETION, CONTRACTOR SHALL INSTALL TYPED AS–BUILT PANEL DIRECTORIES IN EACH PANEL WITHIN THE MFGR–PROVIDED DIRECTORY HOLDER. THE DIRECTORY SHALL CLEARLY IDENTIFY EACH CIRCUIT TO ITS CLEAR, EVIDENT, AND SPECIFIC PURPOSE OR USE. EACH CIRCUIT IDENTITY SHALL INCLUDE SUFFICIENT DETAIL TO ALLOW EACH CIRCUIT TO BE DISTINGUISHED FROM ALL OTHERS PER NEC, OR CEC WHERE ADOPTED, ART **408.1** AND **408.4**. HANDWRITTEN DIRECTORIES ARE UNACCEPTABLE. COPIES OF AS–BUILT PANEL SCHEDULES SHALL BE PLACED IN PANEL DIRECTORIES. E.C. TO INCLUDE ALL COSTS REQUIRED FOR LARGER–THAN–STANDARD CUSTOM PANEL DIRECTORY HOLDERS TO ACCOMMODATE COPIES OF AS–BUILT PANEL SCHEDULES.
15. PANELBOARDS SHALL BE MANUFACTURED BY G.E., CUTLER–HAMMER, SIEMENS, OR SQUARE "D". FUSED PANEL BOARDS SHALL BE BY COOPER BUSSMANN.
16. PROVIDE SHOP DRAWING SUBMITTAL PER THE ELECTRICAL SPECIFICATION SUBMITTAL REQUIREMENTS FOR EACH PANEL DEPICTING CONFORMANCE WITH THE ABOVE NOTES AND SCHEDULES.

SPECIFIC PANEL SCHEDULE NOTES:

"A" PROVIDE LOCK–ON DEVICE.
"B" PROVIDE PERMANENT LOCK–OFF DEVICE THAT SHALL REMAIN IN PLACE WITH OR WITHOUT THE LOCK INSTALLED, PER NEC, OR CEC WHERE ADOPTED, SECTION **110.25.**
"C" PROVIDE SHUNT TRIP DEVICE.
"D" PROVIDE GFCI TYPE DEVICE.
"E" PROVIDE A RED CIRCUIT BREAKER.
"F" PROVIDE A NEW BREAKER TO MATCH THE EXISTING IN PANEL.
"G" EXISTING BREAKER WITH NEW LOAD.
"H" PROVIDE AFCI TYPE DEVICE COMPLYING WITH NEC, OR CEC WHERE ADOPTED, **210.12(A),(B),(C).**

GENERAL SINGLE LINE DIAGRAM NOTES:

1. ALL SWITCHGEAR SHALL BE SQUARE D OR EQUAL BY CUTLER–HAMMER, RSE–SIERRA, G.E., SIEMENS, OR Z–POWER & DISTRIBUTION.
2. ALL ITEMS DEPICTED ON THE SINGLE LINE DRAWINGS SHALL BE ASSUMED AS NEW U.O.N.
3. ALL OVERCURRENT DEVICES IN AN INDIVIDUAL PIECE OF EQUIPMENT SHALL HAVE AN AIC RATING EQUAL TO THE OVERALL RATING OF THE EQUIPMENT–SERIES RATING OF DEVICES WITHIN A PIECE OF EQUIPMENT IS NOT ALLOWED. SEE SPECIFICATIONS FOR MORE INFORMATION.
4. SERIES RATED DEVICES SHALL HAVE BEEN INVESTIGATED BY UL IN COMBINATION WITH THE END USE EQUIPMENT AND IN THE EQUIPMENT IN WHICH THESE DEVICES ARE USED SHALL BE MARKED WITH A SERIES RATING. ALL EQUIPMENT SHALL BE MARKED IN ACCORDANCE WITH NEC (OR CEC–WHERE ADOPTED) REQUIREMENTS. SEE SPECIFICATIONS FOR MORE INFORMATION. WHERE SERIES RATINGS ARE ALLOWED, THE EQUIPMENT SHALL BE LEGIBLY MARKED IN THE FIELD TO INDICATE A SERIES COMBINATION RATING. WHICH SHALL BE READILY VISIBLE AND STATE THE FOLLOWING:

   CAUTION – SERIES COMBINATION SYSTEM RATED AT ??,??? AMPERES. USE ONLY IDENTIFIED REPLACEMENT COMPONENTS IN THIS SYSTEM.

   WHERE ??,??? REPRESENTS AVAILABLE FAULT CURRENT. SEE SPECIFICATIONS FOR PLACARD REQUIREMENTS.
5. ALL TERMINATIONS AND ENCLOSURES SHALL BE RATED FOR USE WITH 75 DEGREE CELSIUS CONDUCTORS.
6. ALL SERVICE ENTRANCE EQUIPMENT RATED AT 400A OR GREATER SHALL BE PROVIDED WITH A BACKFEED–RATED, SOLID STATE MAIN OVERCURRENT DEVICE AND BUSSING RATED AT 100% OPERATION (1000A/sq.in. FOR CU, 750A/sq.in. FOR AL). NO HEAT RISE RATED BUSSING ALLOWED. NON–SERVICE ENTRANCE SWITCHBOARDS AND DISTRIBUTION BOARDS LARGER THAN 600A SHALL BE PROVIDED WITH BUSSING RATED FOR 100% OPERATION – SEE SPECIFICATION FOR CIRCUIT BREAKER REQUIRMENTS. ALL NON–SERVICE ENTRANCE SWITCHBOARDS AND DISTRIBUTION BOARD MAIN OVERCURRENT DEVICES SHALL BE BACKFEED–RATED. BACKFEED RATINGS SHALL COMPLY WITH NEC, OR CEC WHERE ADOPTED, **690.10 (E) & 705.12(D)(5)**. SEE SPECIFICATIONS FOR ADDITIONAL REQUIREMENTS REGARDING CIRCUIT BREAKERS.
7. ALL SWITCHBOARDS AND DISTRIBUTION BOARDS SHALL HAVE:
   a. **SILVER PLATED COPPER** BUSSING WITH RECTANGULAR CROSS SECTION. HORIZONTAL AND VERTICAL BUSSING SHALL BE FULL LENGTH AND SHALL HAVE PROVISIONS FOR FUTURE EXTENSIONS. ALL BUSSING SHALL HAVE MINIMUM WITHSTAND RATING EQUAL TO THE AVAILABLE FAULT CURRENT INDICATED. ALL VERTICAL AND HORIZONTAL BUSSING SHALL BE RATED AT FULL CAPACITY IN ALL SWITCHBOARD AND DISTRIBUTION BOARD SECTIONS. PROVIDE 100% NEUTRAL BUSSING MINIMUM UNLESS OTHERWISE NOTED. PROVIDE FULL LENGTH GROUND BUS AND, WHERE INDICATED ON PLANS, ISOLATED GROUND BUSSING. PROVIDE REAR WIRE WAY IN ALL SWITCHBOARD SECTIONS.
   b. LUGS SUITABLE FOR USE WITH COPPER OR ALUMINUM CONDUCTORS LISTED FOR USE WITH 75 DEGREE CELSIUS AMPACITY CONDUCTORS.
   c. PERMANENT PLACARD(S) MARKED PER THE SPECIFICATIONS AND PER NEC (OR CEC–WHERE ADOPTED) SECTIONS **225.37, 230.2(E), 690.56(A) & (B), 692.56, 700.7, 701.7, 702.7,** AND **705.10** DENOTING THE PRESENCE OF ADDITIONAL SERVICES, PHOTOVOLTAIC SYSTEMS, FUEL CELLS, EMERGENCY OR STAND–BY POWER SOURCES AS APPLICABLE.
8. CONTRACTOR SHALL SUBMIT SWITCHBOARD SHOP DRAWINGS TO THE SERVING UTILITY FOR APPROVAL PRIOR TO FABRICATION. CONTRACTOR SHALL SECURE CONFIRMATION THAT THE PROPOSED SWITCHBOARD COMPLIES WITH ELECTRIC UTILITY COMPANY REGULATIONS.
9. CONTRACTOR SHALL SUBMIT SHOP DRAWINGS PER THE SPECIFICATIONS FOR SWITCHBOARDS, DISTRIBUTION BOARDS TRANSFORMERS, PANEL BOARDS AND ALL OTHER DEVICES SHOWN ON THE SINGLE LINE PRIOR TO FABRICATION.
10. ALLOWABLE DIMENSIONS IN MAIN ELECTRICAL ROOM ARE A CRITICAL COORDINATION ITEM. CONTRACTOR SHALL PROVIDE 1/4"= 1'–0" SCALE DRAWINGS WITH SWITCHGEAR SUBMITTALS SHOWING THAT ALL PROPOSED EQUIPMENT WILL FIT IN THE SPACE PROVIDED. SUBMITTALS WITHOUT THIS DRAWING SHALL BE REJECTED AS INCOMPLETE.
11. UNLESS SPECIFICALLY SHOWN AS (E), (R), (ER), (D), EXISTING OR NON–BOLD, ALL ELECTRICAL DEVICES SHOWN ARE NEW.
12. WHERE REQUIRED BY THE LOCAL AUTHORITY HAVING JURISDICTION OR WHERE A NEW GROUND FAULT PROTECTIVE DEVICE IS BEING INSTALLED, A GROUND FAULT SYSTEM TEST SHALL BE CONDUCTED BY AN INDEPENDENT TESTING AGENCY PER NEC (OR CEC–WHERE ADOPTED) **230.95(C)**. THE GROUND FAULT SYSTEM TEST SHALL BE PERFORMED IN THE PRESENCE OF THE LOCAL AUTHORITY HAVING JURISDICTION. VERIFICATION OF DEVICE SETTINGS PER THE POWER SYSTEMS STUDY SPECIFICATION SHALL BE PERFORMED BY THE SAME INDEPENDENT TESTING AGENCY. THE GROUND FAULT TEST RESULTS SHALL BE DELIVERED TO THE ENGINEER OF RECORD.
13. SEE POWER SYSTEMS STUDY SPECIFICATION FOR ADDITIONAL REQUIREMENTS. ALL REQUIRED POWER SYSTEMS STUDIES MUST BE COMPLETED AND SUBMITTED WITH SWITCHGEAR SUBMITTAL. FAILURE TO DO SO WILL PREVENT THE ENGINEER FROM EFFECTIVELY EVALUATING THE SUBMITTAL AND SHALL RESULT IN REJECTION OF THE SWITCHGEAR SUBMITTAL AS INCOMPLETE.

IDENTIFICATION STAMP
DIV. OF THE STATE ARCHITECT
APP: 01-120592 INC:
REVIEWED FOR
SS ☑ FLS ☑ ACS ☑
DATE: 7/11/2023

OWNER: San Rafael City Schools

PROJECT NAME: Venetia Valley School Middle School Restroom Addition

CLIENT ADDRESS: Enter address here

REGISTERED PROFESSIONAL ENGINEER RAYMOND W. SWARTZ No. E15610 Ex. 12/31/2023 ELECTRICAL STATE OF CALIFORNIA

REVISIONS:

	DESCRIPTION	DATE
△		
△		
△		
△		
△		
△		
△		
△		
△		
△		
△		

PROJECT NO: Project Number
DATE ISSUED: Issue Date
SCALE: As indicated

E2.01

SINGLE LINE DIAGRAM

tk1sc COLLABORATIVE
11870 Pierce Street, Suite 160
Riverside, California 92505
951.299.4160 www.tk1sc.com
Project Leader - Bill Voller
Electrical Lead - Nikolas Bruno
tk1sc Job #: B2203109.000

LIGHTING FIXTURE SCHEDULE NOTES:

A. GENERAL NOTES:

1. THE LIGHTING FIXTURES, LAMPS, BALLASTS, POWER SUPPLIES, DRIVERS AND TRANSFORMERS FOR THIS PROJECT HAVE BEEN SPECIFIED TO ENSURE THAT SPECIFIC AESTHETIC AND PERFORMANCE REQUIREMENTS WILL BE SATISFIED. THESE PRODUCTS HAVE BEEN CAREFULLY RESEARCHED AND EACH SPECIFIED ITEM HAS UNIQUE QUALITIES WHICH WERE DETERMINED TO BE ESSENTIAL IN SATISFYING THE OWNER'S, ARCHITECT'S, ENGINEER'S AND LIGHTING CONSULTANT'S DESIGN CRITERIA.
2. CONTRACTOR SHALL PROVIDE ALL MATERIALS AS DETAILED ON DRAWINGS AND/OR SCHEDULES, AND LABOR AS REQUIRED TO ACHIEVE A COMPLETE AND OPERATING LIGHTING SYSTEM.
3. CONTRACTOR SHALL NOTIFY THE ELECTRICAL ENGINEER AND/OR LIGHTING CONSULTANT OF ANY PROVISIONS OF THE SPECIFICATION THAT IS IN CONFLICT WITH LOCALLY ENFORCED CODES.
4. CONTRACTOR SHALL IMMEDIATELY NOTIFY THE ARCHITECT OF ANY REQUIRED MODIFICATIONS THAT ARE NOT SHOWN ON THE DRAWINGS.
5. ALL ELECTRICAL MATERIAL SHALL BE IN NEW & UNDAMAGED CONDITION WHEN INSTALLED. ALL EQUIPMENT SHALL BE LISTED BY A NATIONALLY RECOGNIZED TESTING LABORATORY.
6. ALL DIMENSIONS & MEASUREMENTS FOUND ON PLANS ARE APPROXIMATE. CONTRACTOR SHALL VALIDATE ALL DIMENSIONS PRIOR TO ORDERING MATERIAL TO INCLUDE MAKING FIELD MEASUREMENTS BASED ON ACTUAL SITE CONDITIONS TO DEVELOP COMPLETE ORDERS AND INSTALL SYSTEMS PER DRAWINGS AND SPECIFICATIONS.
7. REFER TO ARCHITECTURAL PLANS FOR EXACT LOCATION AND ELEVATION OF ALL LIGHTING FIXTURES AND ASSOCIATED DEVICES AND EQUIPMENT.
8. PRIOR TO AIMING/ADJUSTING ACTIVITIES, COMMISSIONING OR PUNCHWALK COMMENCEMENT, CONTRACTOR SHALL PROPERLY TEST AND VERIFY ALL CIRCUITRY AND CONTROL WIRING AND IMPLEMENT ALL CONTROLS PROGRAMMING.

B. INSTALLATION:

1. LOCATIONS OF THE FIXTURES SHALL BE PER THE ARCHITECTURAL REFLECTED CEILING PLAN(S) AND SHALL BE COORDINATED AT TIME OF ROUGH IN. CONFLICTS BETWEEN THE ARCHITECTURAL REFLECTED CEILING PLAN(S) AND THE ELECTRICAL/LIGHTING DESIGN PLAN(S) SHALL BE BROUGHT TO THE ATTENTION OF THE ARCHITECT IN WRITING PRIOR TO ORDERING FIXTURES.
2. LIGHTING DRAWINGS REPRESENT THE DESIGN INTENT OF THE EQUIPMENT, DEVICES, ETC. TO BE CONNECTED AND THE CIRCUITS TO WHICH THEY ARE TO BE CONNECTED. CONTRACTOR SHALL INSTALL ALL CONDUIT, J-BOXES AND ADDITIONAL HARDWARE AND DEVICES AS REQUIRED FOR A COMPLETE AND OPERATING SYSTEM.
3. ALL LIGHTING FIXTURES SHALL BE MOUNTED AND INDIVIDUALLY SUPPORTED IN ACCORDANCE WITH APPLICABLE CODES. FIXTURES SHALL BE FURNISHED AND INSTALLED WITH ALL REQUIRED MOUNTING DEVICES, HARDWARE AND ACCESSORIES.
4. CONTRACTOR TO VERIFY LIGHTING FIXTURE MOUNTING HARDWARE IS COMPATIBLE WITH APPROVED MOUNTING CONDITIONS. MOUNTING CONDITIONS MUST ALLOW FOR AIMING AND ADJUSTING OF LIGHTING FIXTURES ON SITE.
5. CONTRACTOR TO INCLUDE AIMING/ADJUSTING LABOR AFTER DARK AS REQUIRED FOR ANY ADJUSTABLE LIGHTING FIXTURE AND FOR EACH INDIVIDUAL LIGHTING FIXTURE HEAD OR LAMP HOLDER IN A MULTI-FIXTURE/MULTI-LAMP ASSEMBLY. LIGHTING FIXTURES TO BE AIMED/ADJUSTED PER THE DIRECTION OF OWNER, ARCHITECT AND/OR LIGHTING CONSULTANT.
6. CONTRACTOR TO SUPPLY ADEQUATE SUPPORT INCLUDING LADDERS, LIFTS OR OTHER EQUIPMENT REQUIRED TO ACCESS LIGHTING FIXTURES AT THE TIME OF FOCUS, INCLUDING EVENING OR NIGHT WORK AS MAY BE REQUIRED DUE TO SCHEDULE CONFLICT OR DAYLIGHT IMPACT. AIMING/ADJUSTING LABOR SHALL BE PREPARED FOR WORK WITH COMMON HAND TOOLS TO MAKE ADJUSTMENTS AND MINOR REPAIRS DURING AIMING.
7. ALL COVE MOUNTED LIGHTING FIXTURES SHALL EXTEND THE FULL LENGTH OF THE COVE. CONTRACTOR TO FIELD MEASURE COVE LENGTH AND ORDER QUANTITY OF LIGHTING FIXTURES AS REQUIRED. PROVIDE COMPLETE MANUFACTURER SHOP DRAWINGS OF BUILT-IN COVE OR LINEAR LIGHTING SYSTEMS.
8. CONTRACTOR TO REPLACE ALL INOPERATIVE LAMPS, LED ARRAYS OR SYSTEMS AT THE END OF THE CONSTRUCTION PHASE PRIOR TO THE FOCUS AND PROGRAMMING PHASE AND AGAIN PRIOR TO OWNER OCCUPANCY OR PROJECT OPENING.
9. ALL POLE MOUNTED FIXTURES, POST MOUNTED FIXTURES AND BOLLARDS SHALL BE PROVIDED WITH A STRUCTURAL FOOTING AS DETAILED ELSEWHERE IN THE DRAWINGS. FOOTING SIZE TO BE PROVIDED BY STRUCTURAL ENGINEER. REFERENCE FIXTURE SCHEDULE AND DETAILS FOR MORE INFORMATION.
10. ALL EXIT SIGNS SHALL BE INSTALLED IN STRICT ACCORDANCE WITH THE LOCAL FIRE PREVENTION CODE AUTHORITY. THE CONTRACTOR IS RESPONSIBLE FOR PROVIDING ALL NECESSARY HARDWARE SUCH THAT ALL EXIT SIGNS ARE INSTALLED IN AN APPROVED VISIBLE LOCATION. THE CONTRACTOR SHALL VERIFY CHEVRONS AND NUMBER OF FACES PER EXIT SIGN WITH ARCHITECTURAL REFLECTED CEILING PLAN(S). ANY DISCREPANCIES BETWEEN EXIT SIGNS DEPICTED ON ARCHITECTURAL AND ELECTRICAL PLANS SHALL BE BROUGHT TO THE ATTENTION OF THE ARCHITECT PRIOR TO ORDERING EXIT SIGNS.

C. SUBMITTALS AND SUBSTITUTIONS:

1. CONTRACTOR TO SUBMIT FOR APPROVAL ON THE PRODUCTS THEY INTEND TO FURNISH WITHIN TEN (10) DAYS OF AWARD OF CONTRACT. FAILURE TO SUBMIT WITHIN DEADLINE CONSTITUTES A GUARANTEE THAT ONLY THE BASE SPECIFIED PRODUCTS WILL BE SUPPLIED AND THAT NO OTHER PRODUCTS, WHETHER LISTED AS ALTERNATES OR NOT, WILL BE CONSIDERED.
2. CONTRACTOR TO PROVIDE A SUBMITTAL/SHOP DRAWING SUBMITTAL FOR EACH LIGHTING FIXTURE TYPE INCLUDING ACCESSORIES, BALLAST(S), POWER SUPPLIES, DRIVER(S) TRANSFORMER(S), AND INTEGRAL EMERGENCY BATTERIES AND TEST SWITCHES. ANY LIGHTING FIXTURE SUBMITTAL PROVIDED WITHOUT SPECIFIC LIGHTING FIXTURE'S ACCESSORIES, BALLAST, POWER SUPPLY, DRIVER, TRANSFORMER OR BATTERY INFORMATION SHALL BE REJECTED AS INCOMPLETE.
3. SUBSTITUTIONS OF THE SPECIFIED PRODUCTS ARE STRICTLY PROHIBITED – UNLESS APPROVED AS STATED HEREIN. LIGHTING FIXTURE SUBSTITUTIONS SHALL BE FORMALLY PRESENTED TO THE ELECTRICAL ENGINEER AND/OR LIGHTING CONSULTANT, BY APPOINTMENT ONLY, AT LEAST TEN (10) WORKING DAYS PRIOR TO BID TIME. THE SUBMITTAL MATERIAL SHALL INCLUDE THE FOLLOWING ITEMS.
   a. A COMPLETE AND OPERATING SAMPLE, WIRED FOR 120V OPERATION, WITH LAMP, CORD AND PLUG.
   b. A COMPLETE PHOTOMETRIC REPORT, FOR THE PROPOSED SUBSTITUTE PRODUCT, USING THE SPECIFIED LAMP OR LED TYPE AND WATTAGE. INCLUDING TABULATED CANDLEPOWER VALUES, COEFFICIENT OF UTILIZATION, AND AN ISO-FOOT-CANDLE DIAGRAM. PRORATED DATA WILL NOT BE ACCEPTABLE. THE PHOTOMETRIC REPORT MUST BE DONE IN ACCORDANCE WITH PUBLISHED I.E.S. TESTING PROCEDURES AND CERTIFIED BY A REGISTERED ELECTRICAL ENGINEER.
   c. A CURRENT ORIGINAL CATALOG DATA SHEET WITH LIGHTING FIXTURE CATALOG NUMBERS. MODIFIED DATA SHEETS WILL NOT BE ACCEPTABLE.
   d. A SIGNED COPY OF THE "SUBSTITUTION COMPLIANCE FORM", LOCATED IN THE DIVISION 1 SPECIFICATION, STATING THAT IF THE PROPOSED SUBSTITUTION IS ACCEPTED, THE PROJECT SCHEDULE WILL NOT BE NEGATIVELY AFFECTED. IF THE COMPLETION OF THE PROJECT IS DELAYED BECAUSE OF THE APPROVED SUBSTITUTION, THE CONTRACTOR WILL BE RESPONSIBLE FOR PAYMENT OF ANY ESTABLISHED LIQUIDATED DAMAGES.
   e. FOR SPECIFIC INTERIOR FIXTURE SUBSTITUTIONS, WHEN DIRECTED BY THE ELECTRICAL ENGINEER AND/OR LIGHTING CONSULTANT, A POINT-BY-POINT SCALED COMPUTER PRINTOUT SHALL BE PROVIDED VERIFYING THE ILLUMINATION LEVELS FOR THE SPECIFIC INTERIOR AREA. IF THE SUBSTITUTED FIXTURE IS AN EMERGENCY FIXTURE, THE REPORT SHALL BE RUN IN BOTH NORMAL AND EMERGENCY MODES. THIS REPORT SHALL BE CONFIGURED WITH SPECIFIC CONSTRAINTS, AS DIRECTED BY THE ENGINEER OF RECORD. THE REPORT MUST SHOW THAT THE SUBSTITUTED FIXTURE PROVIDES PERFORMANCE EQUAL TO OR BETTER THAN THE LIGHTING LEVELS OF THE SPECIFIED PRODUCT.
   f. FOR ALL EXTERIOR FIXTURE SUBSTITUTIONS, A POINT-BY-POINT SCALED COMPUTER PRINTOUT SHALL BE PROVIDED VERIFYING THE ILLUMINATION LEVELS FOR THE ENTIRE SITE PLAN BASED ON USING THE PROPOSED ALTERNATIVE FIXTURES. THE REPORT MUST SHOW THAT THE SUBSTITUTED FIXTURE PROVIDES PERFORMANCE EQUAL TO, OR BETTER THAN THE LIGHTING LEVELS AND UNIFORMITY RATIOS (MAX:MIN AND AVG:MIN) OF THE SPECIFIED PRODUCT. THIS REPORT SHALL BE CONFIGURED WITH THE FOLLOWING CONSTRAINTS.
      i. THE SPACING INCREMENT OR POINTS ON THE VERIFICATION REPORT SHALL NOT EXCEED TEN (10) FEET IN EITHER DIRECTION.
      ii. THE PHOTOMETRIC CALCULATION SHALL BE BASED ON PROVIDING MAINTAINED FOOT-CANDLE LEVELS USING MEAN LAMP LUMENS AND A LIGHT LOSS FACTOR, AS DIRECTED BY THE ENGINEER OF RECORD.
      iii. THE PHOTOMETRIC CALCULATION SHALL SHOW ANY ADDITIONAL ENERGY AND/OR ENERGY COSTS, FOR A TEN YEAR PERIOD, AS COMPARED TO THE ORIGINALLY SPECIFIED ITEM. THE TOTAL COSTS FOR THESE EXPENSES WILL BE DEDUCTED FROM THE CONTRACT COST.
4. DURING THE BIDDING PROCESS, THE CONTRACTOR SHALL REFER TO THE LIGHTING FIXTURE SCHEDULES ON THE ARCHITECTURAL PLANS (IF PROVIDED ON PROJECT), LIGHTING DESIGN PLANS/SPECIFICATIONS (IF PROVIDED ON PROJECT), AND THE ELECTRICAL PLANS. ANY DISCREPANCIES BETWEEN THEM INCLUDING, BUT NOT LIMITED TO, PART NUMBERS AND FIXTURE DESCRIPTIONS SHALL BE BROUGHT TO THE ATTENTION OF THE ARCHITECT, ELECTRICAL ENGINEER, AND LIGHTING DESIGNER WITH PRE-BID RFI(S). WHERE DISCREPANCIES ARE DISCOVERED WHEN THERE IS INSUFFICIENT TIME TO ISSUE PRE-BID RFI(S), THE BASE BID SHALL INCORPORATE THE MOST COSTLY VERSION OF THE DISCREPANCY AND SHALL BE MEMORIALIZED IN AN RFI OR AS A BID CLARIFICATION. PROVIDING A VOLUNTARY DEDUCTIVE ALTERNATE BID CLARIFYING FIXTURE SCHEDULE DISCREPANCIES IS ALSO AN ACCEPTABLE FORM OF DISCREPANCY DOCUMENTATION.
5. FIXTURE FINISHES:
   a. ALL FIXTURE FINISHES AND COLORS, UNLESS NOTED AS PREMIUM OR CUSTOM, SHALL BE SELECTED FROM THE MANUFACTURERS STANDARD COLOR OPTIONS AS LISTED ON THE FIXTURE SPECIFICATION SHEET. STANDARD FINISH SHALL BE SELECTED BY THE ARCHITECT, INTERIOR DESIGNER OR OWNER. THIS DIRECTION WILL BE PROVIDED IN THE SHOP DRAWING REVIEW PROCESS.
   b. ALL FIXTURES INDICATED WITH A PREMIUM OR CUSTOM COLOR SHALL BE ASSIGNED A CUSTOM COLOR REFERENCE NUMBER (SUCH AS RAL#) OR PROVIDE FIVE (5) PAINT CHIPS FOR MANUFACTURER TO USE TO MATCH COLOR. PREMIUM OR CUSTOM FINISH SHALL BE SELECTED BY THE ARCHITECT, INTERIOR DESIGNER OR OWNER. THIS DIRECTION WILL BE PROVIDED IN THE SHOP DRAWING REVIEW PROCESS.
6. THE LIGHTING FIXTURE MODEL NUMBER MAY INDICATE A FIXTURE OPTION THAT THE CONTRACTOR MUST IDENTIFY PRIOR TO ORDERING/PROVIDING SUBMITTALS, INCLUDING, BUT NOT LIMITED TO: VOLTAGE, MOUNTING CONDITION/HARDWARE, FINISH, DIMMING REQUIREMENTS/BALLAST INFORMATION. GENERALLY, CONTRACTOR-SELECTED OPTIONS ARE DENOTED IN THE PART NUMBER WITH BRACKETS EX: [VOLTS?]
   a. CONTRACTOR SHALL BE RESPONSIBLE FOR VERIFYING AND PROVIDING ALL HANGERS, CLIPS AND NECESSARY HARDWARE TO INSTALL THE FIXTURE IN THE ENVIRONMENT AS SHOWN ON THE ARCHITECTURAL PLANS. ALL FIXTURES SHALL BE PROVIDED WITH ALL REQUIRED STRUCTURAL SUPPORTS AS REQUIRED BY THE CURRENTLY ADOPTED CODES.
   b. VOLTAGES SHALL BE VERIFIED BY THE CONTRACTOR PRIOR TO ORDERING – SEE ELECTRICAL DRAWINGS FOR BRANCH CIRCUIT INFORMATION. IT IS POSSIBLE THAT FIXTURES WILL BE REQUIRED IN VARIOUS VOLTAGES.
7. "NO KNOWN EQUAL" LIGHTING FIXTURE PRICING/BIDDING NOTES:
   a. EACH FIXTURE IDENTIFIED AS "NO KNOWN EQUAL" ON THIS PROJECT SHALL BE BID IN A "LINE ITEM" FORMAT. A PER UNIT MATERIAL COST SHALL BE PROVIDED FOR EACH "NO KNOWN EQUAL" FIXTURE. THIS PRICE SHALL INCLUDE LAMPS AS WELL AS ALL OTHER REQUIRED MATERIALS REQUIRED FOR INSTALLATION. THE FIXTURE PRICE QUOTED WILL BE UTILIZED, PRIOR TO SHOP DRAWING APPROVAL, FOR "ADDING" AND/OR "DELETING" ANY QUANTITY OF THE FIXTURE.
   b. A UNIT COST SHALL BE SUBMITTED FOR EACH "NO KNOWN EQUAL" FIXTURE. SUBMIT THE PRICING AS PART OF THE BID FORM ON A SEPARATE 8 1/2" X 11" SHEET.
   c. FAILURE TO SUBMIT A LINE ITEM FOR EACH "NO KNOWN EQUAL" FIXTURE MAY RESULT IN THE REJECTION, REFUSAL, OR NON-ACCEPTANCE OF THE CONTRACTOR'S BID.
8. FIXTURES IDENTIFIED AS "NO KNOWN EQUAL – OWNER STANDARD" OR "CAMPUS STANDARD" ARE TO BE PROVIDED AS SPECIFIED, WITH SUBSTITUTIONS STRICTLY PROHIBITED. SEE ADDITIONAL NOTES FOR "NO KNOW EQUAL" BIDDING REQUIREMENTS.

D. LIGHTING FIXTURE SPECIFICATIONS:

1. ALL EXTERIOR LIGHTING EQUIPMENT SHALL BE RATED FOR WET LOCATION AND THE IP RATING OF ALL EQUIPMENT, INCLUDING BALLAST, POWER SUPPLY AND TRANSFORMER ENCLOSURES SHALL CONFORM TO THE CONDITIONS IN WHICH THE LIGHTING FIXTURE IS MOUNTED.
2. ALL BALLASTS, POWER SUPPLIES, DRIVERS AND/OR TRANSFORMERS THAT ARE REMOTELY LOCATED SHALL BE INSTALLED AS NEAR TO THE LIGHTING FIXTURE(S) AS POSSIBLE, HIDDEN FROM PUBLIC VIEW IN AN ACCESSIBLE COMPARTMENT THAT IS WELL VENTILATED. CONTRACTOR TO COORDINATE LOCATION(S) WITH ARCHITECT PRIOR TO ROUGH-IN.
3. ALL TRANSFORMERS SHALL BE FUSED ON THE SECONDARY SIDE.
4. COLOR FILTERS SHALL BE GLASS OR DICHROIC UNLESS OTHERWISE INDICATED ON DRAWINGS.
5. CONTRACTOR TO PROVIDE 20% ADDITIONAL COLOR FILTERS FOR EACH COLOR AND SIZE.
6. CONTRACTOR TO VERIFY THAT ALL LIGHTING FIXTURES SPECIFIED WITH A COLOR FILTER ARE SUPPLIED WITH ANY AND ALL ATTACHMENT DEVICES FOR THE FILTER.
7. ALL TRACK LIGHTING FIXTURES SHALL BE PROVIDED WITH THE APPROPRIATE TRACK SYSTEM WHICH SHALL INCLUDE ALL MISCELLANEOUS COMPONENTS REQUIRED, AS WELL A ANY REQUIRED CIRCUIT LIMITERS FOR A COMPLETE INSTALLATION. TRACK LENGTH(S) SHALL BE PER DRAWINGS.

E. DRIVERS / TRANSFORMERS:

1. [OPTION?] IN FIXTURE MODEL NUMBER INDICATE THAT THE FIXTURE DRIVER TYPE AND QUANTITY MUST BE VERIFIED BY THE CONTRACTOR USING FIXTURE CALLOUT INFORMATION AND FIXTURE SWITCHING CONFIGURATION INFORMATION.
2. CONTINUOUS DIMMING AND CONTROLLABLE LED:
   a. PROVIDE CONTROLLABLE LED DIMMING DRIVERS (INTEGRAL OR REMOTE) WITH POWER FACTOR GREATER THAN 0.85 AND MAXIMUM THD OF 20% AT FULL LOAD.
   b. PRIOR TO BID CONTRACTOR TO VERIFY DRIVER COMPATIBILITY WITH DIMMERS, DIMMING CONTROL SYSTEM(S) AND DISTRIBUTED LIGHTING CONTROL SYSTEM(S) WITH RESPECTIVE LIGHTING MANUFACTURER(S) AND LIGHTING/DIMMING CONTROL SYSTEM MANUFACTURERS. IF COMPATIBILITY DOCUMENTATION IS UNAVAILABLE FOR A GIVEN LED FIXTURE/LIGHTING CONTROL SYSTEM COMBINATION, CONTRACTOR SHALL INCLUDE COSTS IN THE BASE BID FOR RESPECTIVE LIGHTING MANUFACTURER AND LIGHTING CONTROLS MANUFACTURER TO TEST/WARRANT COMPATIBILITY OF SAID COMBINATIONS.
   c. CONTINUOUS LED DIMMING DRIVERS SHALL BE AT MINIMUM 4-WIRE 0-10V 10% DIMMING (HOT, NEUTRAL, DIM+, DIM-).

F. EMERGENCY FIXTURES / BATTERY PACKS:

1. LIGHT FIXTURES INDICATED AS EMERGENCY SHALL BE IDENTIFIED / PROVIDED AS FOLLOWS:
   a. INTEGRAL BATTERY PACK (EB):
      3a/3EB – FIXTURE CONNECTED TO CIRCUIT "3", CONTROL SWITCHLEG "a" – WITH THE BATTERY CHARGING LEAD CONNECTED TO A CONSTANT HOT CIRCUIT "3".
      3NL/3EB – FIXTURE CONNECTED TO A CONSTANT HOT CIRCUIT "#3". BATTERY CHARGING LEAD CONNECTED TO A CONSTANT HOT CIRCUIT "3".
   b. REMOTE BACK-UP SOURCE (EM):
      3a/3EM – ROUTED THROUGH A U.L. LISTED TRANSFER RELAY (LC & D #GR-2001E/S) FOR SWITCHED CONTROLS OR A U.L. LISTED TRANSFER SWITCH (BODINE #GTD SERIES DEVICE) FOR DIMMING CONTROLS. CONNECTED TO A CONSTANT HOT EMERGENCY CIRCUIT "3". SEE DISTRIBUTED LIGHTING CONTROL SPECIFICATIONS FOR DEVICE REQUIREMENTS WHEN CONTROLLED BY OCCUPANCY SENSORS.
      3NL/3EM – FIXTURE CONNECTED TO A CONSTANT HOT EMERGENCY CIRCUIT "3".
2. c. REMOTE BACK-UP SOURCE (EM) NOTES:
      – ALL REMOTE BACK UP SOURCE (EM) FIXTURES SHALL BE PROVIDED WITH AN IN LINE FUSE. PROVIDE ADDITIONAL LABELING TO INDICATE FIXTURE IS PROTECTED BY A FUSE.

EMERGENCY BATTERY PACK NOTES:

a. PROVIDE INTEGRAL TEST SWITCH / CHARGE LIGHT OPTION FOR ALL EMERGENCY BATTERY PACKS INSTALLED IN LIGHT FIXTURES.
b. ALL RECESSED DOWNLIGHTS SUPPLIED WITH A BATTERY PACK SHALL BE PROVIDED WITH AN INTEGRAL COMBINATION TEST SWITCH / CHARGING INDICATOR LIGHT– MOUNTED INSIDE THE REFLECTOR. REMOTE TEST SWITCH / CHARGING LIGHTS ARE NOT ALLOWED. THE TEST SWITCH / CHARGING INDICATOR LIGHT SHALL BE SECURELY ATTACHED TO THE REFLECTOR WITH 18" OF SLACK LEADS, FOR EASY REMOVAL OF THE REFLECTOR ASSEMBLY.
c. ALL BATTERY PACKS AND ALL COMBINATION LED BATTERY PACK/EMERGENCY DRIVERS SHALL BE UL924 LISTED.
d. PRIOR TO BID, CONTRACTOR SHALL VERIFY WITH FIXTURE MANUFACTURER(S) THAT EMERGENCY BATTERY PACKS ARE MANUFACTURED TO BE INTEGRAL TO FIXTURE HOUSINGS.
e. SHOULD THE SPECIFIED LED EMERGENCY BATTERY PACK(S) NOT FIT WITHIN A GIVEN FIXTURE(S) OR SHOULD THE FIXTURE NOT BE MANUFACTURED TO ACCOMMODATE A BATTERY PACK, CONTRACTOR SHALL INCLUDE ALL COSTS IN BASE BID TO LOCATE/CONNECT SELF-TESTING MINI INVERTER(S) (IOTA #ILS SERIES OF BODINE#ELI-S-{WATT?}) REMOTELY FROM THE FIXTURE(S) IN THE NEAREST ELECTRICAL ROOM OR TO LOCATE EMERGENCY BATTERY PACK(S) REMOTELY FROM THE FIXTURE ABOVE THE NEAREST ACCESSIBLE CEILING.
f. LED BATTERY PACKS SHALL PROVIDE A MINIMUM OF 90 MINUTES OF EMERGENCY ILLUMINATION, AND SHALL BE RATED AT A MINIMUM OF 10 WATTS, OR AS SPECIFIED. WHERE A FIXTURE TYPE IS UNAVAILABLE WITH A 10W BATTERY PACK OR WHERE THE WATTAGE IS NOT SPECIFIED ON THE PLANS, INCLUDE ALL COST IN BASE BID TO PROVIDE THE HIGHEST WATTAGE AVAILABLE ON THE FIXTURE CUTSHEET. ANY LISTED EQUAL FIXTURE OR ANY SUBSTITUTION OFFERED BY THE CONTRACTOR MUST ALSO HAVE BATTERY PACKS CAPABLE OF PRODUCING THE SAME OR MORE LUMENS WHEN ON BATTERY AS OUTLINED ABOVE. ACCEPTABLE MANUFACTURES: BODINE OR IOTA.
g. TO MAINTAIN UL LISTING OF LED FIXTURE, FIXTURE MANUFACTURER(S) SHALL INSTALL LED EMERGENCY BATTERY PACKS AT THE FACTORY AND OBTAIN A UL LISTING FOR THE FIXTURE WITH EMERGENCY BATTERY PACK. FIELD-INSTALLATION OF LED EMERGENCY BATTERY PACK(S) IS PROHIBITED.
h. PROVIDE DAMP LOCATION VERSION IN ALL DAMP LABEL INSTALLATIONS.

LIGHTING FIXTURE SCHEDULE

SYMBOL	TYPE	MANUFACTURER AND MODEL NUMBER	FIXTURE VA/ WATTS	LAMP/ LAMP OPTION	GENERAL DESCRIPTION
	1	FAIL-SAFE 4VRVT3-LD5-4-G-UNV-L850-CD1-U – EQUAL BY: COLUMBIA	32	LED/3500	4' VAPOR TIGHT LED WITH FIBERGLASS HOUSING, WATERTIGHT HUBS, POLYURETHANE GASKET, STAINLESS STEEL LATCHES, DIMMING DRIVER, AND POLYCARBONATE HIGH IMPACT LENS. – –
	2	RAYON T72OLED-30-UNI12-40-BZ-S – EQUAL BY: APPROVED EQUAL	30	LED/4000	EXTERIOR SURFACE MOUNT LED FIXTURE WITH DIE CAST ALUMINUM HOUSING, ONE PIECE WHITE POWDER COATED REFLECTOR AND POLYCARBONATE LENS. BRONZE FINISH. WET LOCATION LISTED. PROVIDE 90 MIN BATTERY BACKUP WHERE INDICATED ON PLANS. –

SEE GENERAL LIGHTING FIXTURE SCHEDULE NOTES FOR CRITICAL FIXTURE SPECIFICATION AND ORDERING INFORMATION.

IDENTIFICATION STAMP
DIV. OF THE STATE ARCHITECT
APP: 01-120592 INC:
REVIEWED FOR
SS ☑ FLS ☑ ACS ☑
DATE: 7/11/2023

OWNER: San Rafael City Schools

PROJECT NAME: Venetia Valley School Middle School Restroom Addition

CLIENT ADDRESS: Enter address here

REGISTERED PROFESSIONAL ENGINEER
RAYMOND W. SINNETT
No. E 15610
Exp. 12/31/2023
ELECTRICAL
STATE OF CALIFORNIA

REVISIONS:

	DESCRIPTION	DATE
1		
2		
3		
4		
5		
6		
7		
8		
9		
10		

PROJECT NO:	Project Number
DATE ISSUED:	Issue Date
SCALE:	As indicated

E2.02

LIGHTING FIXTURE SCHEDULE

tk1sc COLLABORATIVE
11870 Pierce Street, Suite 160
Riverside, California 92505
951.299.4160 www.tk1sc.com
Project Leader - Bill Voller
Electrical Lead - Nikolas Bruno
tk1sc Job #: B2203109.000

STATE OF CALIFORNIA
Indoor Lighting
NRCC-LTI-E — CALIFORNIA ENERGY COMMISSION

CERTIFICATE OF COMPLIANCE			**NRCC-LTI-E**
Project Name:	VENETIA VALLEY SCHOOL MIDDLE SCHOOL RESTROOM ADDITION	**Report Page:**	**(Page 5 of 6)**
Project Address:	177 N SAN PEDRO RD.	**Date Prepared:**	2/6/2023

T. DECLARATION OF REQUIRED CERTIFICATES OF INSTALLATION

Selections have been made based on information provided in this document. If any selection have been changed by permit applicant, an explanation should be included in Table E. Additional Remarks. These documents must be provided to the building inspector during construction and can be found online at https://www.energy.ca.gov/title24/2019standards/2019_compliance_documents/Nonresidential_Documents/NRC/

Form/Title	Field Inspector	
	Pass	Fail
NRCI-LTI-01-E - Must be submitted for all buildings	☐	☐

U. DECLARATION OF REQUIRED CERTIFICATES OF ACCEPTANCE

Selections have been made based on information provided in this document. If any selection have been changed by the permit applicant, an explanation should be included in Table E. Additional Remarks. These documents must be provided to the building inspector during construction and any with "-A" in the form name must be completed through an Acceptance Test Technician Certification Provider (ATTCP). For more information visit: http://www.energy.ca.gov/title24/attcp/providers.html

Form/Title	Systems/Spaces To Be Field Verified		Field Inspector	
			Pass	Fail
NRCA-LTI-02-A - Must be submitted for occupancy sensors and automatic time switch controls.	☐	☐		
NRCA-LTI-04-A - Must be submitted for demand responsive lighting controls.	☐	☐		

STATE OF CALIFORNIA
Indoor Lighting
NRCC-LTI-E — CALIFORNIA ENERGY COMMISSION

CERTIFICATE OF COMPLIANCE			**NRCC-LTI-E**
Project Name:	VENETIA VALLEY SCHOOL MIDDLE SCHOOL RESTROOM ADDITION	**Report Page:**	**(Page 3 of 6)**
Project Address:	177 N SAN PEDRO RD.	**Date Prepared:**	2/6/2023

H. INDOOR LIGHTING CONTROLS (Not including PAFs)

*This table includes lighting controls for conditioned and unconditioned spaces. When a control having a * is shown, the notes section of this table provides more detail on how compliance is achieved. The lighting controls section of the Compliance Summary Table on the first page will show "DOES NOT COMPLY" if the notes are left blank.*

Building Level Controls

01	02	03	
Mandatory Demand Response §110.12(c)	Shut-off controls §130.1(c)	Field Inspector	
		Pass	Fail
Required > 10,000 SF	Whole Building Auto Time Switch	☐	☐

Area Level Controls

04	05	06	07	08	09	10	11	12	
Area Description	Complete Building or Area Category Primary Function Area	Area Controls §130.1(a)	Multi-Level Controls §130.1(b)	Shut-Off Controls §130.1(c)	Primary/Skylit Daylighting §130.1(d)	Secondary Daylighting §140.6(d)	Interlocked Systems §140.6(a)1	Field Inspector	
								Pass	Fail
					13				
					Plan Sheet Showing Daylit Zones:				

*NOTES: Controls with a * require a note in the space below explaining how compliance is achieved.
EX: Conference 1: Primary/Skylight Daylighting: Exempt because less than 120 watts of general lighting; EXCEPTION 1 to §130.1(d)2

I. LIGHTING POWER ALLOWANCE: COMPLETE BUILDING OR AREA CATEGORY METHODS

Each area complying using the Complete Building or Area Category Methods per §140.6(b) are included in this table. Column 06 indicates if additional lighting power allowances per §140.6(c) or adjustments per §140.6(a) are being used .

Conditioned Spaces

01	02	03	04	05	06	
Area Description	Complete Building or Area Category Primary Function Area	Allowed Density (W/ft²)	Area (ft²)	Allowed Wattage (Watts)	Additional Allowance / Adjustment	
					Area Category	PAF
CORRIDOR	Corridor Area	0.6	61	36.6	No	No
RESTROOMS	Restrooms	0.65	538	349.7	No	No
UTILITY STORAGE	Electrical Mechancial Telephone Room	0.4	61	24.4	No	No
		TOTALS:	660	410.7	See Tables J, or P for detail	

STATE OF CALIFORNIA
Indoor Lighting
NRCC-LTI-E — CALIFORNIA ENERGY COMMISSION

CERTIFICATE OF COMPLIANCE			**NRCC-LTI-E**
Project Name:	VENETIA VALLEY SCHOOL MIDDLE SCHOOL RESTROOM ADDITION	**Report Page:**	**(Page 1 of 6)**
Project Address:	177 N SAN PEDRO RD.	**Date Prepared:**	2/6/2023

This document is used to demonstrate compliance with requirements in §110.9, §110.12(c), §130.0, §130.1, §140.6 and §141.0(b)2 for indoor lighting scopes using the prescriptive path.

A. GENERAL INFORMATION

01	Project Location (city)	SAN RAFAEL	04	Total Conditioned Floor Area (ft²)	660
02	Climate Zone	2	05	Total Unconditioned Floor Area (ft²)	0
03	Occupancy Types Within Project (select all that apply):		06	# of Stories (Habitable Above Grade)	1

● Support Areas ● : See Table I

B. PROJECT SCOPE

This table includes any lighting systems that are within the scope of the permit application and are demonstrating compliance using the prescriptive path outlined in §140.6 or §141.0(b)2 for alterations.

Scope of Work	Conditioned Spaces		Unconditioned Spaces	
01	02	03	04	05
My Project Consists of (check all that apply):	Calculation Method	Area (ft²)	Calculation Method	Area (ft²)
☒ New Lighting System	Area Category Method	660	Area Category Method	0
☐ New Lighting System - Parking Garage				
Total Area of Work (ft²)	660		0	

C. COMPLIANCE RESULTS

If any cell on this table says "DOES NOT COMPLY" or "COMPLIES with Exceptional Conditions'' refer to Table D. for guidance.

Lighting in conditioned and unconditioned spaces must not be combined for compliance per §140.6(b)1	Allowed Lighting Power per §140.6(b) (Watts)						Adjusted Lighting Power per §140.6(a) (Watts)					Compliance Results
	01	02	03	04		05		06	07		08	09
	Complete Building §140.6(c)1	Area Category §140.6(c)2	Area Category Additional §140.6(c)2G (+)	Tailored §140.6(c)3 (+)	=	**Total Allowed** (Watts)	≥	Total Designed (Watts)	Adjustments PAF Lighting Control Credits §140.6(a)2 (-)	=	**Total Adjusted** (Watts) *Includes Adjustments	**05 must be >= 08 §140.6**
	(See Table I)	(See Table I)	(See Table J)	(See Table K)				(See Table F)	(See Table P)			
Conditioned		410.7	0		=	411	≥	384	0	=	384	COMPLIES
Unconditioned					=		≥			=		

STATE OF CALIFORNIA
Indoor Lighting
NRCC-LTI-E — CALIFORNIA ENERGY COMMISSION

CERTIFICATE OF COMPLIANCE			**NRCC-LTI-E**
Project Name:	VENETIA VALLEY SCHOOL MIDDLE SCHOOL RESTROOM ADDITION	**Report Page:**	**(Page 6 of 6)**
Project Address:	177 N SAN PEDRO RD.	**Date Prepared:**	2/6/2023

DOCUMENTATION AUTHOR'S DECLARATION STATEMENT

I certify that this Certificate of Compliance documentation is accurate and complete.

Documentation Author Name:	Documentation Author Signature:
Company: tk1sc	Signature Date:
Address:	CEA/ HERS Certification Identification (if applicable):
City/State/Zip:	Phone:

RESPONSIBLE PERSON'S DECLARATION STATEMENT

I certify the following under penalty of perjury, under the laws of the State of California:

1. The information provided on this Certificate of Compliance is true and correct.
2. I am eligible under Division 3 of the Business and Professions Code to accept responsibility for the building design or system design identified on this Certificate of Compliance (responsible designer)
3. The energy features and performance specifications, materials, components, and manufactured devices for the building design or system design identified on this Certificate of Compliance conform to the requirements of Title 24, Part 1 and Part 6 of the California Code of Regulations.
4. The building design features or system design features identified on this Certificate of Compliance are consistent with the information provided on other applicable compliance documents, worksheets, calculations, plans and specifications submitted to the enforcement agency for approval with this building permit application.
5. I will ensure that a completed signed copy of this Certificate of Compliance shall be made available with the building permit(s) issued for the building, and made available to the enforcement agency for all applicable inspections. I understand that a completed signed copy of this Certificate of Compliance is required to be included with the documentation the builder provides to the building owner at occupancy.

Responsible Designer Name: RAY SWARTZ	Responsible Designer Signature:
Company: tk1sc	Date Signed: 2023-02-06
Address: 15231 LAGUNA CANYON ROAD SUITE 100	License: E15610
City/State/Zip: IRVINE CA 92518	Phone: (949) 751-5800

STATE OF CALIFORNIA
Indoor Lighting
NRCC-LTI-E — CALIFORNIA ENERGY COMMISSION

CERTIFICATE OF COMPLIANCE			**NRCC-LTI-E**
Project Name:	VENETIA VALLEY SCHOOL MIDDLE SCHOOL RESTROOM ADDITION	**Report Page:**	**(Page 4 of 6)**
Project Address:	177 N SAN PEDRO RD.	**Date Prepared:**	2/6/2023

J. ADDITIONAL ALLOWANCE: AREA CATEGORY METHOD QUALIFYING LIGHTING SYSTEM
This section does not apply to this project.

K. TAILORED METHOD GENERAL LIGHTING POWER ALLOWANCE
This section does not apply to this project.

L. ADDITIONAL LIGHTING ALLOWANCE: TAILORED WALL DISPLAY
This section does not apply to this project.

M. ADDITIONAL LIGHTING ALLOWANCE: TAILORED FLOOR AND TASK LIGHTING
This section does not apply to this project.

N. ADDITIONAL LIGHTING ALLOWANCE: TAILORED ORNAMENTAL/SPECIAL EFFECTS
This section does not apply to this project.

O. ADDITIONAL LIGHTING ALLOWANCE: TAILORED VERY VALUABLE MERCHANDISE
This section does not apply to this project.

P. POWER ADJUSTMENT: LIGHTING CONTROL CREDIT (POWER ADJUSTMENT FACTOR (PAF))
This section does not apply to this project.

Q. RATED POWER REDUCTION COMPLIANCE FOR ALTERATIONS
This section does not apply to this project.

R. 80% LIGHTING POWER FOR ALL ALTERATIONS - CONTROLS EXCEPTIONS
This section does not apply to this project.

S. DAYLIGHT DESIGN POWER ADJUSTMENT FACTOR (PAF)
This section does not apply to this project.

STATE OF CALIFORNIA
Indoor Lighting
NRCC-LTI-E — CALIFORNIA ENERGY COMMISSION

CERTIFICATE OF COMPLIANCE			**NRCC-LTI-E**
Project Name:	VENETIA VALLEY SCHOOL MIDDLE SCHOOL RESTROOM ADDITION	**Report Page:**	**(Page 2 of 6)**
Project Address:	177 N SAN PEDRO RD.	**Date Prepared:**	2/6/2023

C. COMPLIANCE RESULTS

Controls Compliance (See Table H for Details)	COMPLIES
Rated Power Reduction Compliance (See Table Q for Details)	

D. EXCEPTIONAL CONDITIONS
This table is auto-filled with uneditable comments because of selections made or data entered in tables throughout the form.

E. ADDITIONAL REMARKS
This table includes remarks made by the permit applicant to the Authority Having Jurisdiction.

F. INDOOR LIGHTING FIXTURE SCHEDULE

This table includes all permanent designed lighting and all portable lighting in offices.

Designed Wattage: Conditioned Spaces

01	02	03	04	05	06	07	08	09	10	
Name or Item Tag	Complete Luminaire Description	Modular (Track) Fixture	Small Aperture & Color Change[1]	Watts per luminaire[2]	How is Wattage determined	Total Number of Luminaires	Excluded per §140.6(a)3	Design Watts	Field Inspector	
									Pass	Fail
1	TYPE 1	No	No	32	Mfr. Spec	12	No	384	☐	☐
							Total Designed Watts: CONDITIONED SPACES	384		

[1]*FOOTNOTE: Design Watts for small aperture and color changing luminaires which qualify per §140.6(a)4B is adjusted to be 75% of their rated wattage. Table F automatically makes this adjustment, the permit applicant should enter full rated wattage in column 05.*

[2]*Authority Having Jurisdiction may ask for Luminaire cut sheets to confirm wattage used for compliance per §130.0(c) Wattage used must be the maximum rated for the luminaire, not the lamp.*

G. MODULAR LIGHTING SYSTEMS
This section does not apply to this project.

TITLE 24 PROCEDURES FOR TESTING AND ADJUSTING

CONTRACTOR SHALL BE RESPONSIBLE FOR ALL WORK ASSOCIATED WITH FINAL INSPECTION AND APPLICABLE ACCEPTANCE REQUIREMENT PROCEDURES. INCLUDE ALL COSTS IN THE BASE BID. THIS SHALL INCLUDE, BUT NOT BE LIMITED TO, CONSTRUCTION INSPECTION, MEASUREMENTS, MONITORING, FUNCTIONAL TESTING, CALIBRATING, ETC. CONTRACTOR SHALL ASSUME THE ROLE OF "FIELD TECHNICIAN" AND "RESPONSIBLE PERSON" AS DEFINED IN STATE OF CALIFORNIA 2019 BUILDING ENERGY EFFICIENCY STANDARDS NONRESIDENTIAL COMPLIANCE MANUAL SECTIONS 13.1.2.2 AND 13.1.2.3.

LIGHTING CONTROL ACCEPTANCE TESTING AND ADJUSTING PROCEDURES – REFER TO NRCA–LTI–02–A DOCUMENTS.

AUTOMATIC DAYLIGHT CONTROL ACCEPTANCE TESTING AND ADJUSTING PROCEDURES – REFER TO NRCA–LTI–03–A DOCUMENTS.

DEMAND RESPONSE LIGHTING CONTROL ACCEPTANCE TESTING AND ADJUSTING PROCEDURES – REFER TO NRCA–LTI–04–A DOCUMENTS.

INSTITUTIONAL TUNING PAF ACCEPTANCE TESTING AND ADJUSTING PROCEDURES – REFER TO NRCA–LTI–05–A DOCUMENTS.

OUTDOOR LIGHTING CONTROL ACCEPTANCE TESTING AND ADJUSTING PROCEDURES – REFER TO NRCA–LTO–02–A DOCUMENTS.

ALL LIGHTING CONTROLS TESTING AND ADJUSTING DOCUMENTS NOTED ABOVE ARE AVAILABLE FROM THE CALIFORNIA ENERGY COMMISSION WEB SITE AT:
https://ww2.energy.ca.gov/title24/2019standards/2019_compliance_documents/Nonresidential_Documents/NRCA/

TITLE 24 GENERAL NOTE

CONTRACTOR SHALL BE RESPONSIBLE FOR ALL WORK ASSOCIATED WITH FINAL INSPECTION AND APPLICABLE ACCEPTANCE REQUIREMENT PROCEDURES. INCLUDE ALL COSTS IN THE BASE BID. THIS SHALL INCLUDE, BUT NOT BE LIMITED TO, CONSTRUCTION INSPECTION, MEASUREMENTS, MONITORING, FUNCTIONAL TESTING, CALIBRATING, ETC. CONTRACTOR SHALL ASSUME THE ROLE OF "FIELD TECHNICIAN" AND "RESPONSIBLE PERSON" AS DEFINED IN STATE OF CALIFORNIA 2019 BUILDING ENERGY EFFICIENCY STANDARDS NONRESIDENTIAL COMPLIANCE MANUAL SECTIONS 13.1.2.2 AND 13.1.2.3.

SEE STATE OF CALIFORNIA 2019 BUILDING ENERGY EFFICIENCY STANDARDS SECTIONS 10–103(a)3A AND 10–103(a)3B AND SECTION 130.4 FOR MORE INFORMATION.

SEE STATE OF CALIFORNIA 2019 BUILDING ENERGY EFFICIENCY STANDARDS NONRESIDENTIAL COMPLIANCE MANUAL CHAPTER 13 FOR MORE DETAILED REQUIREMENTS / INFORMATION.

SEE STATE OF CALIFORNIA 2019 BUILDING ENERGY EFFICIENCY STANDARDS RESIDENTIAL COMPLIANCE MANUAL CHAPTER 2 FOR MORE DETAILED REQUIREMENTS / INFORMATION.

PROVIDE COMPLETED INSTALLATION CERTIFICATE(S) AND CERTIFICATE(S) OF ACCEPTANCE AS REQUIRED TO THE SATISFACTION OF THE ENFORCEMENT AGENCY.

IDENTIFICATION STAMP
DIV. OF THE STATE ARCHITECT
APP: 01-120592 INC:
REVIEWED FOR
SS ☑ FLS ☑ ACS ☑
DATE: 7/11/2023

OWNER: San Rafael City Schools

PROJECT NAME: Venetia Valley School Middle School Restroom Addition

CLIENT ADDRESS: Enter address here

REGISTERED PROFESSIONAL ENGINEER RAYMOND W. SWARTZ No. E15610 Exp. 12/31/2023 ELECTRICAL STATE OF CALIFORNIA

REVISIONS:

	DESCRIPTION	DATE
1		
2		
3		
4		
5		
6		
7		
8		
9		
10		

PROJECT NO:	Project Number
DATE ISSUED:	Issue Date
SCALE:	As indicated

E2.03

TITLE 24 CALCULATIONS

tk1sc COLLABORATIVE
11870 Pierce Street, Suite 160
Riverside, California 92505
951.299.4160 www.tk1sc.com

Project Leader - Bill Voller
Electrical Lead - Nikolas Bruno
tk1sc Job #: B2203109.000

STATE OF CALIFORNIA
Outdoor Lighting
NRCC-LTO-E — CALIFORNIA ENERGY COMMISSION

CERTIFICATE OF COMPLIANCE			**NRCC-LTO-E**
Project Name:	VENETIA VALLEY SCHOOL MIDDLE SCHOOL RESTROOM ADDITION	**Report Page:**	**(Page 5 of 6)**
Project Address:	177 N SAN PEDRO RD.	**Date Prepared:**	2/6/2023

L. LIGHTING ALLOWANCE: ORNAMENTAL
This section does not apply to this project.

M. LIGHTING ALLOWANCE: PER SPECIFIC AREA
This table includes areas using the wattage allowance per specific area from Table 140.7-B . More than one specific area allowance may be taken in a single project, if applicable. However, multiple specific area allowances may not be taken for the exact same area on the site.

01	02	03	04	05	06	07	08	09	10
		CALCULATED ALLOWANCE (Watts)			DESIGN WATTS				
Area Description	Specific Area Type per Table 140.7-B	Specific Area (ft²)[1]	Allowed Density (W/ft²)	Extra Allowance (Watts)	Luminaire Name or Item Tag	Watts per Luminaire	# of Luminaires	Design Watts	Additional Allowance (Watts)
RESTROOM EXTERIOR	NonSalesCanopy	1265	0.27	341.6	2	30	6	180	180
							Total Design Watts for this Area:	180	
							Total Allowance (Watts) All Areas:		180

[1] *FOOTNOTES: See Table 140.7-B for rules for calculating the specific areas (ft² for these additional lighting allowances.*
[2] *For luminaires indicated in Table F as linear, wattage in column 07 is W/lf instead of Watts/luminaire. Total linear feet should be indicated in column 08 instead of number of luminaires.*

N. EXISTING CONDITIONS POWER ALLOWANCE (alterations only)
This section does not apply to this project.

O. DECLARATION OF REQUIRED CERTIFICATES OF INSTALLATION
Selections have been made based on information provided in this document. If any selection have been changed by permit applicant, an explanation should be included in Table E. Additional Remarks. These documents must be provided to the building inspector during construction and can be found online at https://www.energy.ca.gov/title24/2019standards/2019_compliance_documents/Nonresidential_Documents/NRCI/

Form/Title	Field Inspector	
	Pass	Fail
NRCI-LTO-01-E - Must be submitted for all buildings	☐	☐

P. DECLARATION OF REQUIRED CERTIFICATES OF ACCEPTANCE
There are no NRCA forms required for this project.

STATE OF CALIFORNIA
Outdoor Lighting
NRCC-LTO-E — CALIFORNIA ENERGY COMMISSION

CERTIFICATE OF COMPLIANCE			**NRCC-LTO-E**
Project Name:	VENETIA VALLEY SCHOOL MIDDLE SCHOOL RESTROOM ADDITION	**Report Page:**	**(Page 3 of 6)**
Project Address:	177 N SAN PEDRO RD.	**Date Prepared:**	2/6/2023

F. OUTDOOR LIGHTING FIXTURE SCHEDULE
For new or altered lighting systems demonstrating compliance with §140.7 all new luminaires being installed and any existing luminaires remaining or being moved within the spaces covered by the permit application are included in the Table below. For altered lighting systems using the Existing Power method per §141.0(b)2L only new luminaires being installed and replacement luminaires being installed as part of the project scope are included (ie, existing luminaires remaining or existing luminaires being moved are not included).

Designed Wattage:

01	02		03	04	05	06	07	08	09	10	
Name or Item Tag	Complete Luminaire Description		Watts per luminaire[1, 2]	How is Wattage determined	Total number luminaires[2]	Luminaire Status[3]	Excluded per §140.7(a)	Design Watts	Cutoff Req. > 6,200 initial lumen output §130.2(b)[4]	Field Inspector	
										Pass	Fail
2	TYPE 2	☐ Linear	30	Mfr. Spec	6	New	☐	180	NA: < 6200 lumens	☐	☐
							Total Design Watts:	180			

** NOTES: Selections with a * require a note in the space below explaining how compliance is achieved.*
EX: Luminaire is lighting a statue; EXCEPTION 2 to §130.2(b)

[1] *FOOTNOTES: Authority Having Jurisdiction may ask for Luminaire cut sheets to confirm wattage used for compliance per §130.0(c)*
[2] *For linear luminaires, wattage should be indicated as W/lf instead of Watts/luminaire. Total linear feet should be indicated in column 05 instead of number of luminaires.*
[3] *Select "New" for new luminaires in a new outdoor lighting project, or for added luminaires in an alteration. Select "Altered" for replacement luminaires in an alteration. Select "Existing to Remain" for existing luminaires within the project scope that are not being altered and are remaining. Select "Existing Reinstalled" for existing luminaires which are being removed and reinstalled as part of the project scope.*
[4] *Compliance with mandatory cutoff requirements is required for luminaires with initial lumen output >= 6,200 unless exempted by §130.2(b)*

G. CUTOFF REQUIREMENTS (BUG)
This section does not apply to this project.

STATE OF CALIFORNIA
Outdoor Lighting
NRCC-LTO-E — CALIFORNIA ENERGY COMMISSION

CERTIFICATE OF COMPLIANCE			**NRCC-LTO-E**
Project Name:	VENETIA VALLEY SCHOOL MIDDLE SCHOOL RESTROOM ADDITION	**Report Page:**	**(Page 1 of 6)**
Project Address:	177 N SAN PEDRO RD.	**Date Prepared:**	2/6/2023

A. GENERAL INFORMATION

01	Project Location (city)	SAN RAFAEL	04	Total Illuminated Hardscape Area (ft²)	0
02	Climate Zone	2			
03	Outdoor Lighting Zone per Title 24 Part 1 §10.114 or as designated by Authority Having Jurisdiction (AHJ):				
☐	LZ-0: Very Low - Undeveloped Parkland	☐ LZ-2: Moderate - Rural Areas	☐ LZ-4: High - Must be reviewed by CA Energy Commission for Approval		
☐	LZ-1: Low - Developed Parkland	☒ LZ-3: Moderately High - Urban Areas			

B. PROJECT SCOPE
This table includes outdoor lighting systems that are within the scope of the permit application and are demonstrating compliance using the prescriptive path outlined in §140.7 or §141.0(b)2L for alterations.

My Project Consists of:

01	02
☒ New Lighting System	Must Comply with Allowances from §140.7
☐ Altered Lighting System	Is your alteration increasing the connected lighting load (Watts)? ○ Yes ○ No

03	04	05
% of Existing Luminaires Being Altered[1]	Sum Total of Luminaires Being Added or Altered	Calculation Method
☐ < 10% ☐ >= 10% and < 50% ☐ >= 50%		

Please proceed to Table F. Outdoor Lighting Fixture Schedule to define the project's luminaires.

[1] *FOOTNOTES: % of Existing Luminaires Being Altered = (Sum Total of Luminaires Being Added or Altered / Existing Luminaires within the Scope of the Permit Application) x 100.*

STATE OF CALIFORNIA
Outdoor Lighting
NRCC-LTO-E — CALIFORNIA ENERGY COMMISSION

CERTIFICATE OF COMPLIANCE			**NRCC-LTO-E**
Project Name:	VENETIA VALLEY SCHOOL MIDDLE SCHOOL RESTROOM ADDITION	**Report Page:**	**(Page 6 of 6)**
Project Address:	177 N SAN PEDRO RD.	**Date Prepared:**	2/6/2023

DOCUMENTATION AUTHOR'S DECLARATION STATEMENT
I certify that this Certificate of Compliance documentation is accurate and complete.

Documentation Author Name:	Documentation Author Signature:
Company: tk1sc	Signature Date:
Address:	CEA/ HERS Certification Identification (If applicable):
City/State/Zip:	Phone:

RESPONSIBLE PERSON'S DECLARATION STATEMENT
I certify the following under penalty of perjury, under the laws of the State of California:
1. The information provided on this Certificate of Compliance is true and correct.
2. I am eligible under Division 3 of the Business and Professions Code to accept responsibility for the building design or system design identified on this Certificate of Compliance (responsible designer)
3. The energy features and performance specifications, materials, components, and manufactured devices for the building design or system design identified on this Certificate of Compliance conform to the requirements of Title 24, Part 1 and Part 6 of the California Code of Regulations.
4. The building design features or system design features identified on this Certificate of Compliance are consistent with the information provided on other applicable compliance documents, worksheets, calculations, plans and specifications submitted to the enforcement agency for approval with this building permit application.
5. I will ensure that a completed signed copy of this Certificate of Compliance shall be made available with the building permit(s) issued for the building, and made available to the enforcement agency for all applicable inspections. I understand that a completed signed copy of this Certificate of Compliance is required to be included with the documentation the builder provides to the building owner at occupancy.

Responsible Designer Name: RAY SWARTZ	Responsible Designer Signature:
Company: tk1sc	Date Signed: 2023-02-06
Address: 15231 LAGUNA CANYON ROAD SUITE 100	License: E15610
City/State/Zip: IRVINE CA 92518	Phone: (949) 751-5800

STATE OF CALIFORNIA
Outdoor Lighting
NRCC-LTO-E — CALIFORNIA ENERGY COMMISSION

CERTIFICATE OF COMPLIANCE			**NRCC-LTO-E**
Project Name:	VENETIA VALLEY SCHOOL MIDDLE SCHOOL RESTROOM ADDITION	**Report Page:**	**(Page 4 of 6)**
Project Address:	177 N SAN PEDRO RD.	**Date Prepared:**	2/6/2023

H. OUTDOOR LIGHTING CONTROLS
This table demonstrates compliance with controls requirements for all new or altered luminaires installed as part of the permit application. For alteration projects, luminaires which are existing to remain (ie untouched) and luminaires which are removed and reinstalled (wiring only) do not need to be included in this table even if they are within the spaces covered by the permit application.
*When an option having a * is selected, the notes section of this table must be completed. The lighting controls section of the Compliance Summary Table on the first page will show "DOES NOT COMPLY" if the notes are left blank.*

Mandatory Controls

01	02	03	04	05	
Area Description	Shut-Off §130.2(c)1	Auto-Schedule §130.2(c)2	Motion Sensor §130.2(c)3	Field Inspector	
				Pass	Fail

**NOTES: Controls with a * require a note in the space below explaining how compliance is achieved.*
EX: Not permitted by health & safety to be turned off; EXCEPTION 1 to §130.2(c)

I. LIGHTING POWER ALLOWANCE (per §140.7)
This table includes areas using allowance calculations per §140.7. General Hardscape Allowance is per Table 140.7-A while "Use it or lose it" Allowances are per Table 140.7-B . Indicate which allowances are being used to expand sections for user input. Luminaires that qualify for one of the "Use it or lose it" allowances shall not qualify for another "Use it or lose it" allowance.

	01				
	☐ General Hardscape Allowance Table I (below)	"Use it or lose it" Allowance (select all that apply) (select all that apply)			
		☐ Per Application Table J	☐ Sales Frontage Table K	☐ Ornamental Table L	☒ Per Specific Area Table M
Calculated General Hardscape Lighting Power Allowance per Table 140.7-A (LZ 0, 1 & 4)					
Calculated General Hardscape Lighting Power Allowance per Table 140.7-A (LZ 2 & 3)					

J. LIGHTING ALLOWANCE: PER APPLICATION
This section does not apply to this project.

K. LIGHTING ALLOWANCE: SALES FRONTAGE
This section does not apply to this project.

STATE OF CALIFORNIA
Outdoor Lighting
NRCC-LTO-E — CALIFORNIA ENERGY COMMISSION

CERTIFICATE OF COMPLIANCE			**NRCC-LTO-E**
Project Name:	VENETIA VALLEY SCHOOL MIDDLE SCHOOL RESTROOM ADDITION	**Report Page:**	**(Page 2 of 6)**
Project Address:	177 N SAN PEDRO RD.	**Date Prepared:**	2/6/2023

C. COMPLIANCE RESULTS
Results in this table are automatically calculated from data input and calculations in Tables F through I. Note: If any cell on this table says "COMPLIES with Exceptional Conditions" refer to Table D. Exceptional Conditions for guidance or see applicable Table referenced below.

Calculations of Total Allowed Lighting Power (Watts) §140.7 or §141.0(b)2L													Compliance Results		
01		02		03		04		05		06		07		08	09
General Hardscape Allowance §140.7(d)1 (See Table I)	+	Per Application §140.7(d)2 (See Table J)	+	Sales Frontage §140.7(d)2 (See Table K)	+	Ornamental §140.7(d)2 (See Table L)	+	Per Specific Area §140.7(d)2 (See Table M)	OR	Existing Power Allowance §141.0(b)2L (See Table N)	=	**Total Allowed** (Watts)	≥	**Total Actual** (Watts)	**07 must be >= 08**
0	+	----	+	----	+	----	+	180	OR	---	=	180	≥	180	COMPLIES
Cutoff Compliance (See Table G for Details)															N/A
Controls Compliance (See Table H for Details)															COMPLIES

D. EXCEPTIONAL CONDITIONS
This table is auto-filled with uneditable comments because of selections made or data entered in tables throughout the form.

E. ADDITIONAL REMARKS
This table includes remarks made by the permit applicant to the Authority Having Jurisdiction.

TITLE 24 PROCEDURES FOR TESTING AND ADJUSTING

CONTRACTOR SHALL BE RESPONSIBLE FOR ALL WORK ASSOCIATED WITH FINAL INSPECTION AND APPLICABLE ACCEPTANCE REQUIREMENT PROCEDURES. INCLUDE ALL COSTS IN THE BASE BID. THIS SHALL INCLUDE, BUT NOT BE LIMITED TO, CONSTRUCTION INSPECTION, MEASUREMENTS, MONITORING, FUNCTIONAL TESTING, CALIBRATING, ETC. CONTRACTOR SHALL ASSUME THE ROLE OF "FIELD TECHNICIAN" AND "RESPONSIBLE PERSON" AS DEFINED IN STATE OF CALIFORNIA 2019 BUILDING ENERGY EFFICIENCY STANDARDS NONRESIDENTIAL COMPLIANCE MANUAL SECTIONS 13.1.2.2 AND 13.1.2.3.

LIGHTING CONTROL ACCEPTANCE TESTING AND ADJUSTING PROCEDURES – REFER TO NRCA–LTI–02–A DOCUMENTS.

AUTOMATIC DAYLIGHT CONTROL ACCEPTANCE TESTING AND ADJUSTING PROCEDURES – REFER TO NRCA–LTI–03–A DOCUMENTS.

DEMAND RESPONSE LIGHTING CONTROL ACCEPTANCE TESTING AND ADJUSTING PROCEDURES – REFER TO NRCA–LTI–04–A DOCUMENTS.

INSTITUTIONAL TUNING PAF ACCEPTANCE TESTING AND ADJUSTING PROCEDURES – REFER TO NRCA–LTI–05–A DOCUMENTS.

OUTDOOR LIGHTING CONTROL ACCEPTANCE TESTING AND ADJUSTING PROCEDURES – REFER TO NRCA–LTO–02–A DOCUMENTS.

ALL LIGHTING CONTROLS TESTING AND ADJUSTING DOCUMENTS NOTED ABOVE ARE AVAILABLE FROM THE CALIFORNIA ENERGY COMMISSION WEB SITE AT:
https://ww2.energy.ca.gov/title24/2019standards/2019_compliance_documents/Nonresidential_Documents/NRCA/

TITLE 24 GENERAL NOTE

CONTRACTOR SHALL BE RESPONSIBLE FOR ALL WORK ASSOCIATED WITH FINAL INSPECTION AND APPLICABLE ACCEPTANCE REQUIREMENT PROCEDURES. INCLUDE ALL COSTS IN THE BASE BID. THIS SHALL INCLUDE, BUT NOT BE LIMITED TO, CONSTRUCTION INSPECTION, MEASUREMENTS, MONITORING, FUNCTIONAL TESTING, CALIBRATING, ETC. CONTRACTOR SHALL ASSUME THE ROLE OF "FIELD TECHNICIAN" AND "RESPONSIBLE PERSON" AS DEFINED IN STATE OF CALIFORNIA 2019 BUILDING ENERGY EFFICIENCY STANDARDS NONRESIDENTIAL COMPLIANCE MANUAL SECTIONS 13.1.2.2 AND 13.1.2.3.

SEE STATE OF CALIFORNIA 2019 BUILDING ENERGY EFFICIENCY STANDARDS SECTIONS 10–103(a)3A AND 10–103(a)3B AND SECTION 130.4 FOR MORE INFORMATION.

SEE STATE OF CALIFORNIA 2019 BUILDING ENERGY EFFICIENCY STANDARDS NONRESIDENTIAL COMPLIANCE MANUAL CHAPTER 13 FOR MORE DETAILED REQUIREMENTS / INFORMATION.

SEE STATE OF CALIFORNIA 2019 BUILDING ENERGY EFFICIENCY STANDARDS RESIDENTIAL COMPLIANCE MANUAL CHAPTER 2 FOR MORE DETAILED REQUIREMENTS / INFORMATION.

PROVIDE COMPLETED INSTALLATION CERTIFICATE(S) AND CERTIFICATE(S) OF ACCEPTANCE AS REQUIRED TO THE SATISFACTION OF THE ENFORCEMENT AGENCY.

IDENTIFICATION STAMP
DIV. OF THE STATE ARCHITECT
APP: 01-120592 INC:
REVIEWED FOR
SS ☑ FLS ☑ ACS ☑
DATE: 7/11/2023

OWNER: San Rafael City Schools

PROJECT NAME: Venetia Valley School Middle School Restroom Addition

CLIENT ADDRESS: Enter address here

REGISTERED PROFESSIONAL ENGINEER
RAYMOND W. SWARTZ
No. E 15610
Exp. 12/31/2023
ELECTRICAL
STATE OF CALIFORNIA

REVISIONS:

	DESCRIPTION	DATE
1		
2		
3		
4		
5		
6		
7		
8		
9		
10		
11		

PROJECT NO:	Project Number
DATE ISSUED:	Issue Date
SCALE:	As indicated

E2.04

TITLE 24 CALCULATIONS

tk1sc COLLABORATIVE
11870 Pierce Street, Suite 160
Riverside, California 92505
951.299.4160 www.tk1sc.com
Project Leader - Bill Voller
Electrical Lead - Nikolas Bruno
tk1sc Job #: B2203109.000

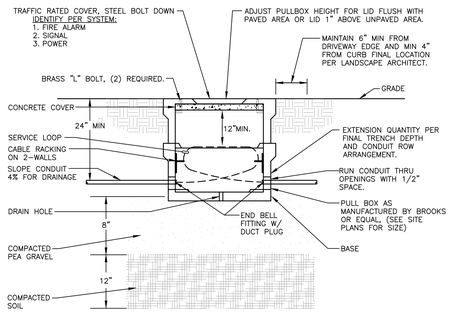

PULL BOX NOTES

1. ALL BOXES SHALL BE SET ON A MINIMUM 8" GRAVEL BASE WITH 1/2" DIAMETER GRAVEL.
2. ALL INCIDENTAL CONCRETE SHALL BE REMOVED FROM BOXES.
3. PROVIDE WATERTIGHT SPLICES AND CAPS FOR POWER CONDUCTORS.
4. PROVIDE MECHANICAL DUCT PLUGS IN ALL CONDUITS (BOTH W/ CONDUCTORS AND IN EMPTY SPARE CONDUITS.)
5. PROVIDE CABLE RACK HARDWARE ON SIDE WALLS OF ALL VAULTS/MH'S AND PB'S. SECURE CABLES TO CABLE RACK HOOKS IN A NEAT WORKMANLIKE MANNER.
6. CABLE SERVICE/SLACK LOOP SHALL MAKE ONE COMPLETE LOOP AROUND THE INSIDE CIRCUMFERENCE OF THE BOX. SECURE CABLE SERVICE LOOP TO METAL RACKING HARDWARE ON 2 SIDES OF THE PULLBOX.
7. PROVIDE IDENTIFYING TAGS ON ALL POWER AND COMMUNICATION CONDUCTORS IN PULLBOXES.
8. PULLBOX SHALL BE SIZED TO ACCOMMODATE ALL CONDUITS SHOWN ON THE PLAN DRAWINGS, AND PER C.E.C. REQUIREMENTS.

FLUSH IN GRADE PULL BOX

SCALE: N.T.S. **4**

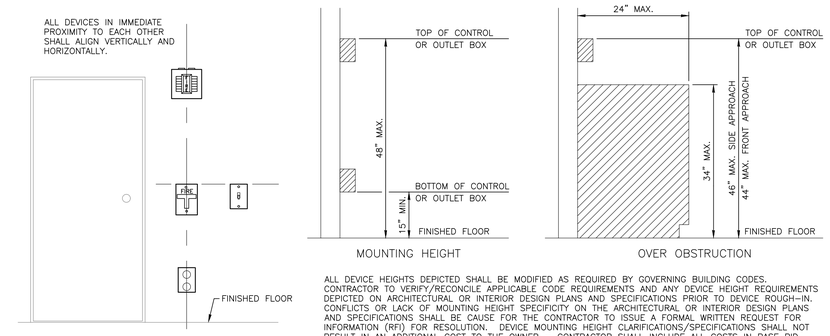

ALL DEVICE HEIGHTS DEPICTED SHALL BE MODIFIED AS REQUIRED BY GOVERNING BUILDING CODES. CONTRACTOR TO VERIFY/RECONCILE APPLICABLE CODE REQUIREMENTS AND ANY DEVICE HEIGHT REQUIREMENTS DEPICTED ON ARCHITECTURAL OR INTERIOR DESIGN PLANS AND SPECIFICATIONS PRIOR TO DEVICE ROUGH-IN. CONFLICTS OR LACK OF MOUNTING HEIGHT SPECIFICITY ON THE ARCHITECTURAL OR INTERIOR DESIGN PLANS AND SPECIFICATIONS SHALL BE CAUSE FOR THE CONTRACTOR TO ISSUE A FORMAL WRITTEN REQUEST FOR INFORMATION (RFI) FOR RESOLUTION. DEVICE MOUNTING HEIGHT CLARIFICATIONS/SPECIFICATIONS SHALL NOT RESULT IN AN ADDITIONAL COST TO THE OWNER – CONTRACTOR SHALL INCLUDE ALL COSTS IN BASE BID.

DEVICE ALIGNMENT & MOUNTING HEIGHT DETAILS

SCALE: NTS **1**

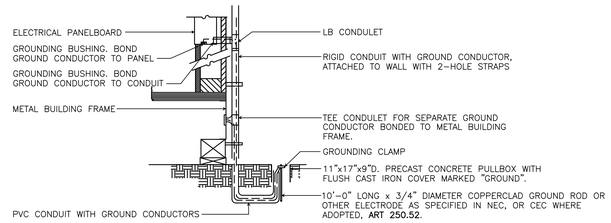

NOTES:

1. METAL MODULAR BUILDINGS: WHEN METAL BUILDINGS ARE MADE OF COMPONENTS, EACH BUILDING COMPONENT, INCLUDING STEEL RAMPS, MUST BE ELECTRICALLY BONDED TOGETHER IN A MANNER ACCEPTABLE TO DSA/SSS. PAINT ON THE SURFACE WILL INHIBIT PASSAGE OF ELECTRICAL CURRENT; THEREFORE, BOLTED CONNECTIONS OF COMPONENT PARTS ARE NOT AN ACCEPTABLE ELECTRICAL BOND.

2. WOOD MODULAR BUILDINGS: IN WOOD FRAME MODULAR BUILDINGS, THE ELECTRICAL SYSTEM MUST BE GROUNDED AS REQUIRED IN TITLE 24, C.E.C.

3. GROUNDING: THE ELECTRICAL CIRCUITS ARE USUALLY PROPERLY GROUNDED, HOWEVER, IT IS ALSO NECESSARY TO INDEPENDENTLY GROUND THE STEEL FRAMES. THIS IS PARTICULARLY IMPORTANT WHEN THE BUILDING IS SUPPORTED ON A FOUNDATION MADE OF WOOD.

4. INSPECTOR OF RECORD (I.O.R.) SHALL WITNESS GROUND TEST AND SUBMIT A COPY OF THE REPORT TO THE ARCHITECT. ALL BUILDING COMPONENTS MUST BE ELECTRICALLY BONDED TOGETHER AND MUST BE INDEPENDENTLY GROUNDED. ALL GROUNDING SYSTEMS ARE TO BE TESTED WITH A MEGGER UNIT OR IN AN OTHERWISE ACCEPTABLE MANNER. REFER TO C.E.C. SECTIONS 250-52 AND NEC. 250-53 FOR SPECIFIC GROUNDING REQUIREMENTS.

5. SIZE OF CONDUCTORS SHALL COMPLY WITH NEC. TABLE 250-95.

6. BOND SEPARATE CONDUCTORS FROM GROUND ROD TO ELECTRICAL PANEL AND TO METAL BUILDING FRAME (NEC. 250-52). IN ADDITION TO THE DETAIL SHOWN ABOVE, BOND THE ELECTRICAL CONDUCTOR GROUND TO METAL WATER PIPE EMBEDDED AT LEAST 10 FEET INTO THE SOIL IF AVAILABLE (N.E.C. 250-52 AND NEC. 250-53).

7. ALL MODULES OF METAL FRAME BUILDINGS AND RAMPS SHALL BE ELECTRICALLY BONDED TOGETHER (BOLTING ONLY IS NOT ACCEPTABLE BONDING).

8. CHECK RESISTANCE TO GROUND. IF RESISTANCE EXCEEDS 25 OHMS, INSTALL ADDITIONAL GROUND RODS WITH CONDUCTORS AS SHOWN, SEPARATED AT LEAST 6'-0" UNTIL RESISTANCE IS REDUCED TO 25 OHMS OR LESS. (NEC. 250-53).

9. SEE SPECIFICATIONS FOR TESTING OF GROUNDING REQUIRED.

10. ALL ELECTRICAL WORK TO MEET THE REQUIREMENTS OF THE STATE ELECTRICAL CODES. PART 3 OF TITLE 24, CAC, WHICH REQUIRES PROPER GROUNDING OF ALL ELECTRICAL CIRCUITS, EQUIPMENT, ETC. FOR PUBLIC SCHOOL BUILDING(S), REGARDLESS OF THE TYPE OF CONSTRUCTION.

BUILDING GROUNDING DETAIL

SCALE: N.T.S. **5**

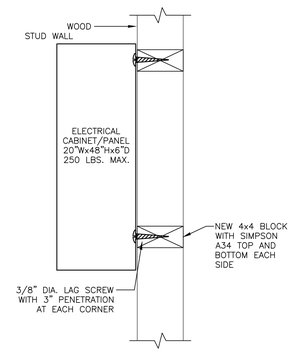

SURFACE PANEL MOUNTING

SCALE: N.T.S. **2**

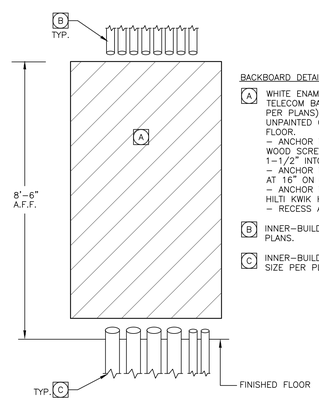

BACKBOARD DETAIL NOTES:

A. WHITE ENAMEL PAINTED A/C GRADE FIRE RATED PLYWOOD TELECOM BACKBOARD, (8' HIGH x 3/4" THICK x WIDTH PER PLANS) BY E.C.. LEAVE ONE FIRE MARSHAL STAMP UNPAINTED ON EACH SHEET. MOUNT 6" ABOVE FINISHED FLOOR.
– ANCHOR TO WOOD STUD WALL WITH #14 TRUSS HEAD WOOD SCREWS AT 16" ON CENTER. MINIMUM EMBEDMENT 1-1/2" INTO STUDS.
– ANCHOR TO METAL STUD WALL WITH #12 SMS SCREWS AT 16" ON CENTER.
– ANCHOR TO CMU WALL WITH 1/4" x 1-5/8" EMBED HILTI KWIK HUS EZ SCREW ANCHOR (ICC ESR 3056).
– RECESS ALL SCREWS/BOLTS.

B. INNER-BUILDING CONDUITS. QUANTITY AND SIZE PER PLANS.

C. INNER-BUILDING CONDUITS AND SLEEVES. QUANTITY AND SIZE PER PLANS.

TELECOM BACKBOARD DETAIL

SCALE: N.T.S. **6**

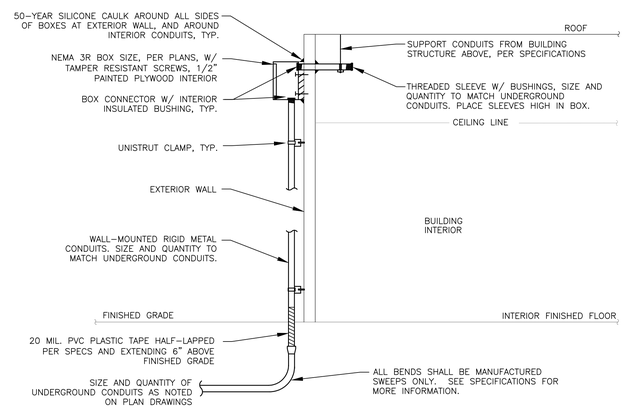

NOTES:

1. ALL BOXES/PLYWOOD TO BE SECURED TO BUILDING STRUCTURE USING MIN 1/4" X 2" WALL ANCHORS/LAG BOLTS.
2. 50-YEAR SILICONE CAULK AROUND ALL PENETRATIONS, BOXES AND ALL THREADS AS REQUIRED.
3. SEAL ALL UNDERGROUND CONDUITS PER COMMUNICATION PATHWAY NOTES, GENERAL PROJECT NOTES, AND PROJECT SPECIFICATIONS.
4. SEE SPECIFICATIONS FOR MORE INFORMATION.

TYPICAL EXTERIOR JUNCTION BOX DETAIL

SCALE: N.T.S. **3**

IDENTIFICATION STAMP
DIV. OF THE STATE ARCHITECT
APP: 01-120592 INC:
REVIEWED FOR
SS ☑ FLS ☑ ACS ☑
DATE: 7/11/2023

OWNER: San Rafael City Schools

PROJECT NAME: Venetia Valley School Middle School Restroom Addition

CLIENT ADDRESS: Enter address here

REGISTERED PROFESSIONAL ENGINEER
RAYMOND W. SINNETT
No. 15610
Exp. 12/31/2023
ELECTRICAL
STATE OF CALIFORNIA

REVISIONS:

	DESCRIPTION	DATE

PROJECT NO:	Project Number
DATE ISSUED:	Issue Date
SCALE:	As indicated

E3.01

ELECTRICAL DETAILS

tk1sc COLLABORATIVE
11870 Pierce Street, Suite 160
Riverside, California 92505
951.299.4160 www.tk1sc.com

Project Leader - Bill Voller
Electrical Lead - Nikolas Bruno
tk1sc Job #: B2203109.000

WHERE THE FOLLOWING SYMBOLS ARE INDICATED ON THE ELECTRICAL DRAWINGS ARCHITECTURAL DRAWINGS AND / OR STRUCTURED CABLING SYSTEM DRAWINGS:

S WP

THE FOLLOWING SHALL BE PROVIDED, AS DEPICTED IN THE FOLLOWING DIAGRAMMATIC CONNECTIVITY DETAIL.

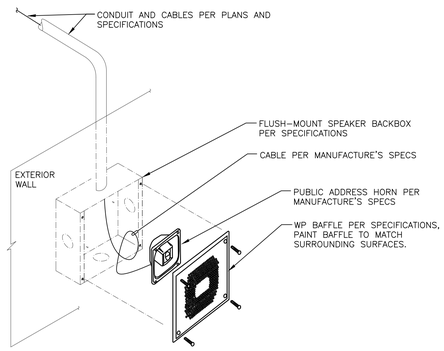

EXTERIOR PUBLIC ADDRESS SPEAKER - FLUSH MOUNT (5)

SCALE: N.T.S.

WHERE THE FOLLOWING SYMBOLS ARE INDICATED ON THE ELECTRICAL DRAWINGS ARCHITECTURAL DRAWINGS AND / OR STRUCTURED CABLING SYSTEM DRAWINGS:

O WP

THE FOLLOWING SHALL BE PROVIDED, AS DEPICTED IN THE FOLLOWING DIAGRAMMATIC CONNECTIVITY DETAIL.

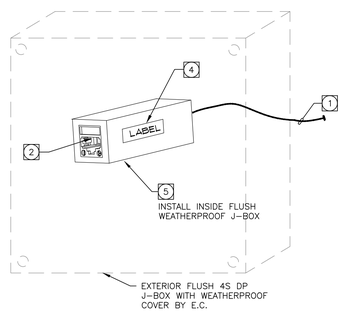

NOTE – OUTLET IS FOR FUTURE DEVICE.

EXTERIOR OUTLET - FLUSH MOUNT (6)

SCALE: N.T.S.

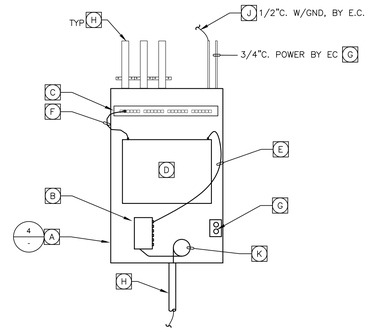

NOTE:
REFERENCE DISTRICT STANDARDS AND SPECIFICATIONS FOR ADDITIONAL INFORMATION AND REQUIREMENTS

LOW PROFILE IDF CABINET KEY NOTES:

- (A) PROVIDE GRAY, 42H" x 24"W x 10"D WALL MOUNT LOW PROFILE DATA CABINET, HUBBELL #RE4X (OR DISTRICT-APPROVED EQUAL).
- (B) PROVIDE EITHER A SURFACE MOUNTED FIBER HOUSING WITH LC CONNECTOR PANELS INSIDE THE IDF CABINET, OR A 1U RACK-MOUNTED FIBER HOUSING WITH LC CONNECTOR PANELS. TERMINATE SINGLE MODE STRANDS ON DUPLEX-LC SINGLE MODE CONNECTORS WITH DUPLEX LC CONNECTOR PANELS. CONTRACTOR SHALL DETERMINE BEST FIT IN THE FIELD AND REQUEST DISTRICT'S APPROVAL OF ENCLOSURE PRIOR TO ROUGH-IN. INCLUDE ALL COSTS IN BASE BID.
- (C) 24-PORT CATEGORY-6 PATCH PANEL(S). QUANTITY AS REQUIRED TO TERMINATE ALL CABLES.
- (D) ETHERNET NETWORK SWITCHE(S) ARE OWNER FURNISHED CONTRACTOR INSTALLED.
- (E) FIBER DUPLEX PATCH CORD, LC/LC, SINGLE MODE 1-METER. VERIFY REQUIRED CONNECTOR TYPE(S) WITH DISTRICT I.T. STAFF PRIOR TO ORDERING.
- (F) PROVIDE 1-FT LONG CAT-6 PATCH CORD FOR EACH CABLE TERMINATED ON THE CAT-6 PATCH PANEL. COLOR OF PATCH CORD PER DISTRICT STANDARDS.
- (G) 120V 20A DUPLEX POWER RECEPTACLE BY E.C. MOUNT INSIDE CABINET. E.C. SHALL COORDINATE FINAL LOCATION IN FIELD WITH LOW VOLTAGE CONTRACTOR.
- (H) UNDERGROUND AND IN-BUILDING CONCEALED CONDUITS BY EC. REFER TO SITE PLAN AND FLOOR PLAN FOR QUANTITY AND SIZES.
- (J) E.C. TO PROVIDE 1/2" CONDUIT WITH #6 AWG GREEN GROUND CONDUCTOR FROM RACK TO NEAREST ELECTRICAL DISTRIBUTION PANEL GROUND BUSBAR. TERMINATE END OF GROUND CONDUCTOR WITH A 2-HOLE COMPRESSION LUG. DATA CONTRACTOR SHALL ATTACH THE OTHER END OF THE GROUND CONDUCTOR WITH A 2-HOLE COMPRESSION LUG AND BOLTS TO INSIDE IDF CABINET.
- (K) REFER TO LAN BLOCK DIAGRAM FOR FIBER OPTIC BACKBONE CABLE REQUIREMENTS.

IDF CABINET WALL MOUNT DETAIL (3)

SCALE: NTS

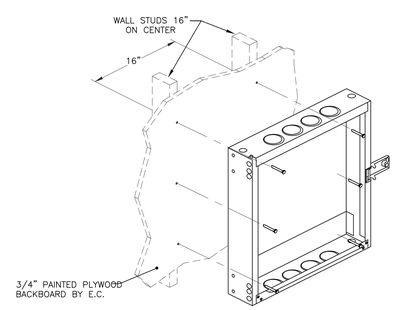

GENERAL NOTES:

1. THE REAR FRAME MUST BE SECURED TO WALL AT (6) LOCATIONS AND ARE INTENDED TO GO THROUGH 3/4" PLYWOOD BACKBOARD INTO WALL:
   - METAL STUD: PROVIDE #14 x 3" SMS WITH HEX WASHER HEADS CENTERED ON METAL WALL STUDS, 4 TOTAL, 1 IN EACH CORNER.
   - WOOD STUD: PROVIDE 1/4" DIAMETER X 3" LAG SCREWS AND WASHERS CENTERED ON WOOD WALL STUDS, 4 TOTAL, 1 IN EACH CORNER.
   - C.M.U. WALL: PROVIDE 3/8" DIAMETER SIMPSON TITEN HD X 3 1/2" EMBEDMENT, 4 TOTAL, 1 IN EACH CORNER.
2. CONTRACTOR TO INSTALL CABINET TO BACKBOARD. E.C. TO INSTALL PAINTED PLYWOOD BACKBOARD. SEE SPECIFICATIONS FOR MORE INFORMATION.
3. MAXIMUM TOTAL EQUIPMENT WEIGHT: 100 POUNDS.

IDF CABINET WALL MOUNTING DETAIL (4)

SCALE: NTS

DATA DEVICE NOTES:

1. PROVIDE (1) CAT 6, 4 PAIR UTP CABLE(S) TO RESPECTIVE IDF RACK. TERMINATE STATION END(S) IN STATION CONNECTOR(S) PER DETAILS. TERMINATE RACK END(S) ON PATCH PANEL(S) PER DETAILS.
2. PROVIDE DATA CAT-6 STATION CONNECTOR. COLOR OF CONNECTOR PER SPECIFICATIONS.
3. PROVIDE SURFACE-MOUNT, PLENUM-RATED TWO-PORT HOUSING (LEVITON 41089-2WP OR EQUAL). MOUNT INSIDE FLUSH BOX.
4. PROVIDE FACEPLATE LABELING PER SPECIFICATIONS. SEE SPECIFICATIONS FOR ALL OTHER LABELING REQUIREMENTS.
5. SINGLE PORT JACK BOX (AMP #1116697-1 OR EQUAL). MOUNT INSIDE FLUSH WEATHERPROOF BOX.

WHERE THE FOLLOWING SYMBOLS ARE INDICATED ON THE ELECTRICAL DRAWINGS, ARCHITECTURAL DRAWINGS AND/OR STRUCTURED CABLING SYSTEM DRAWINGS:

▽ 2

THE FOLLOWING SHALL BE PROVIDED AS DEPICTED IN THE FOLLOWING DIAGRAMMATIC CONNECTIVITY DETAIL.

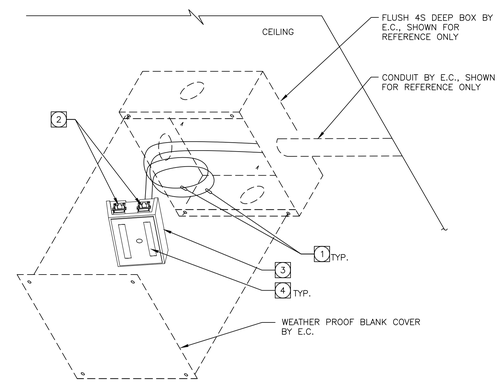

CEILING DEVICE FOR VAPE SENSOR (1)

SCALE: NTS

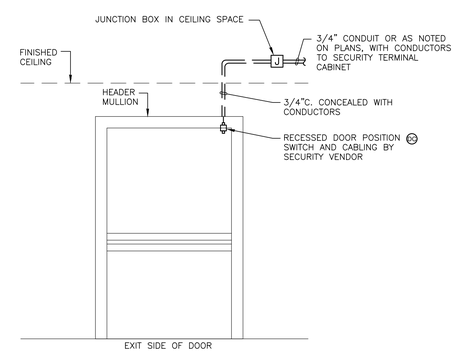

SINGLE DOOR WITH RECESSED DOOR CONTACT (2)

SCALE: NTS

IDENTIFICATION STAMP
DIV. OF THE STATE ARCHITECT
APP: 01-120592 INC:
REVIEWED FOR
SS ☑ FLS ☑ ACS ☑
DATE: 7/11/2023

OWNER: San Rafael City Schools

PROJECT NAME: Venetia Valley School Middle School Restroom Addition

CLIENT ADDRESS: Enter address here

REGISTERED PROFESSIONAL ENGINEER DAYMOND W. SINNETT EX. 12/31/2023 15610 ELECTRICAL STATE OF CALIFORNIA

REVISIONS:

	DESCRIPTION	DATE
1		
2		
3		
4		
5		
6		
7		
8		
9		
10		
11		

PROJECT NO:	Project Number
DATE ISSUED:	Issue Date
SCALE:	As indicated

E3.02

ELECTRICAL DETAILS

tk1sc COLLABORATIVE
11870 Pierce Street, Suite 160
Riverside, California 92505
951.299.4160 www.tk1sc.com

Project Leader - Bill Voller
Electrical Lead - Nikolas Bruno
tk1sc Job #: B2203109.000

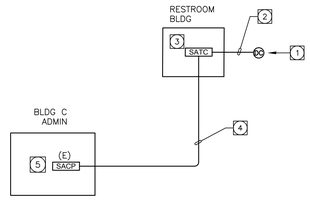

BLOCK DIAGRAM KEY NOTES:

1. RECESSED DOOR CONTACT DEVICE. QUANTITY AND LOCATIONS PER PLAN DRAWINGS. SEE DISTRICT STANDARDS AND SPECIFICATIONS FOR MORE INFORMATION.
2. DEVICE CABLE PER MANUFACTURER REQUIREMENTS AND RECOMMENDATIONS. CABLE SHALL BE RATED FOR THE ENVIRONMENT IN WHICH IT IS INSTALLED.
3. WALL MOUNTED TERMINAL CABINET WITH TERMINAL BLOCKS, POPPITS, ZONE EXPANDERS, POWER SUPPLY, ETC. AS REQUIRED FOR A COMPLETE AND FULLY FUNCTIONAL SYSTEM.
4. BACKBONE CABLNG PER MANUFACTURER REQUIREMENTS AND RECOMMENDATIONS. CABLE SHALL BE RATED FOR THE ENVIRONMENT IN WHICH IT IS INSTALLED. ALL CABLING INSTALLED OUTSIDE SHALL BE WET LOCATION RATED.
5. EXISTING FIRST ALARM SECURITY SYSTEM HEAD END EQUIPMENT. MODIFY AS REQUIRED TO INCORPORATE ALL EXISTING AND NEW DEVICES ON THIS CAMPUS. PROVIDE ADDITIONAL POWER SUPPLIES, ZONE EXPANDERS, TERMINAL BLOCKS, PROGRAMMING, ETC AS REQUIRED FOR A COMPLETE AND FULLY FUNCTIONAL SYSTEM.

SECURITY ALARM SYSTEM GENERAL INSTALLATION NOTES:

1. DRAWINGS AND LAYOUTS ARE PRIMARILY DIAGRAMMATIC IN NATURE. CONTRACTOR IS RESPONSIBLE FOR FINAL FOOTAGES AND EXACT LOCATIONS.
2. REFERENCE DISTRICT STANDARDS AND SPECIFICATIONS FOR ADDITIONAL INFORMATION AND REQUIREMENTS.
3. PROVIDE ALL CABLES, DEVICES, TERMINAL BLOCKS, TERMINAL CABINETS, POWER SUPPLIES, BACKBONE CABLES, CABLE SUPPORTS, HANGER WIRE/ROD, AND ALL OTHER COMPONENTS AND PROGRAMMING AS REQUIRED PER DISTRICT STANDARDS AND SPECIFICATIONS FOR A COMPLETE AND FULLY FUNCTIONAL SYSTEM.
4. ALL NEW CABLE SHALL BE RATED FOR THE ENVIRONMENT IN WHICH IT IS INSTALLED, PER THE CEC AND CBC CODES.
5. VERIFY ALL QUANTITIES AND LOCATIONS WITH PLAN DRAWINGS AND SPECIFICATIONS.

SECURITY ALARM SYSTEM DIAGRAM

SCALE: N.T.S.

1

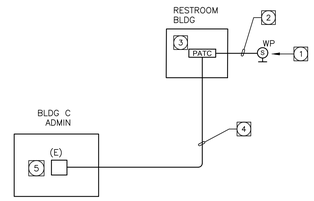

PUBLIC ADDRESS SYSTEM BLOCK DIAGRAM KEY NOTES:

1. EXTERIOR FLUSH MOUNTED PUBLIC ADDRESS SPEAKER WITH BACK BOX AND BAFFLE. MATCH EXISTING TYPE ON CAMPUS. QUANTITY AND LOCATIONS PER PLAN DRAWINGS. SEE DISTRICT STANDARDS AND SPECIFICATIONS FOR MORE INFORMATION.
2. DEVICE CABLE PER MANUFACTURER REQUIREMENTS AND RECOMMENDATIONS. CABLE SHALL BE RATED FOR THE ENVIRONMENT IN WHICH IT IS INSTALLED.
3. WALL MOUNTED TERMINAL CABINET WITH TERMINAL BLOCKS, AMPLIFIERS, ETC. AS REQUIRED FOR A COMPLETE AND FULLY FUNCTIONAL SYSTEM.
4. BACKBONE CABLNG PER MANUFACTURER REQUIREMENTS AND RECOMMENDATIONS. CABLE SHALL BE RATED FOR THE ENVIRONMENT IN WHICH IT IS INSTALLED. ALL CABLING INSTALLED OUTSIDE SHALL BE WET LOCATION RATED.
5. EXISTING BOGEN PUBLIC ADDRESS SYSTEM HEAD END EQUIPMENT. MODIFY AS REQUIRED TO INCORPORATE ALL EXISTING AND NEW DEVICES ON THIS CAMPUS. PROVIDE ADDITIONAL AMPLIFIERS, TERMINAL BLOCKS, PROGRAMMING, ETC AS REQUIRED FOR A COMPLETE AND FULLY FUNCTIONAL SYSTEM.

PUBLIC ADDRESS SYSTEM GENERAL INSTALLATION NOTES:

1. DRAWINGS AND LAYOUTS ARE PRIMARILY DIAGRAMMATIC IN NATURE. CONTRACTOR IS RESPONSIBLE FOR FINAL FOOTAGES AND EXACT LOCATIONS.
2. REFERENCE DISTRICT STANDARDS AND SPECIFICATIONS FOR ADDITIONAL INFORMATION AND REQUIREMENTS.
3. PROVIDE NEW MULTIPAIR BACKBONE CABLING FROM SYSTEM HEAD END TO EACH NEW BUILDING.
4. PROVIDE NEW PUBLIC ADDRESS SPEAKERS, BACK BOXES, CABLING, TERMINAL CABINETS, TERMINAL BLOCKS, AMPLIFIERS, ETC AS REQUIRED FOR A COMPLETE AND FULLY FUNCTIONAL SYSTEM. PROVIDE HEAD END PROGRAMMING AND ZONING PER THE DISTRICT'S DIRECTION. CONTRACTOR SHALL COORDINATE PROGRAMMING REQUIREMENTS IN THE FIELD WITH THE DISTRICT.
5. ALL NEW CABLE SHALL BE RATED FOR THE ENVIRONMENT IN WHICH IT IS INSTALLED, PER THE CEC AND CBC CODES.
6. CONTRACTOR SHALL TERMINATE, TEST AND LABEL ALL CABLES IN ACCORDANCE WITH THE DISTRICT STANDARDS AND PROJECT SPECIFICATIONS.
7. VERIFY ALL QUANTITIES AND LOCATIONS WITH PLAN DRAWINGS AND SPECIFICATIONS.

PUBLIC ADDRESS SYSTEM BLOCK DIAGRAM

SCALE: N.T.S.

2

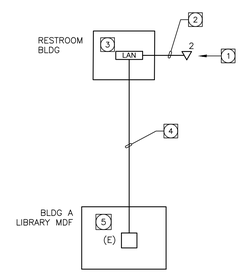

LAN SYSTEM BLOCK DIAGRAM KEY NOTES:

1. FLUSH CEILING DUAL DATA DEVICE. QUANTITY AND LOCATIONS PER PLAN DRAWINGS. SEE SPECIFICATIONS AND FACEPLATE DETAILS FOR MORE INFORMATION.
2. **CATEGORY-6** UTP 4-PAIR CABLE(S). CABLE QUANTITIES AT EACH DEVICE PER FACEPLATE DETAILS. TERMINATE ON FACEPLATE AT DEVICE LOCATION AND ON **CAT-6 PATCH PANEL** AT IDF CABINET. SEE PLAN DRAWINGS FOR LOCATIONS AND QUANTITIES. SEE FACEPLATE DETAILS FOR MORE INFORMATION.
3. WALL MOUNTED LOW PROFILE LAN CABINET WITH LOCKABLE DOOR, COMPLETE WITH FIBER ENCLOSURE, 24-PORT CAT-6 PATCH PANEL, ETCETERA COMPLETE. REFER TO IDF CABINET DETAIL ON E3.02. ETHERNET SWITCH IS OWNER FURNISHED CONTRACTOR INSTALLED. MOUNT +72" TO TOP OF CABINET.
4. INDOOR/OUTDOOR/RISER-RATED FIBER OPTIC BACKBONE CABLE, OS2 12-STRAND SINGLE MODE. TERMINATE ALL STRANDS BOTH ENDS. SEE DISTRICT STANDARDS AND SPECIFICATIONS FOR ADDITIONAL REQUIREMENTS.
5. AT EXISTING MDF RACK, PROVIDE 1RU RACK MOUNT FIBER OPTIC CABLE CONNECTOR HOUSING COMPLETE WITH ALL CONNECTORS, PANELS, ADAPTERS, FAN OUT KITS, FIBER PATCH CORDS, ETCETERA. MATCH EXISTING MANUFACTURER. PROVIDE MACHINE GENERATED LABELS ON ALL STRANDS AND CONNECTORS. REFER TO DISTRICT STANDARDS AND SPECIFICATIONS FOR ADDITIONAL REQUIREMENTS.

LAN SYSTEM GENERAL INSTALLATION NOTES:

1. DRAWINGS AND LAYOUTS ARE PRIMARILY DIAGRAMMATIC IN NATURE. CONTRACTOR IS RESPONSIBLE FOR FINAL FOOTAGES AND EXACT LOCATIONS.
2. REFERENCE DISTRICT STANDARDS AND SPECIFICATIONS FOR ADDITIONAL INFORMATION AND REQUIREMENTS.
3. IN THE IDF ROOMS, PROVIDE ALL RACKS, LADDER TRAY, VERTICAL AND HORIZONTAL WIRE MANAGERS, GROUNDING AND BONDING, TELECOM BUS BARS, POWER STRIPS, MOUNTING HARDWARE, CABLE SUPPORTS, HANGER WIRE/ROD, SLEEVES, D-RINGS, AND ALL OTHER COMPONENTS AS REQUIRED PER DISTRICT STANDARDS AND SPECIFICATIONS FOR A COMPLETE AND FULLY FUNCTIONAL SYSTEM.
4. CONTRACTOR SHALL PROVIDE ALL FIBER OPTIC RACK-MOUNTED ENCLOSURES, PANELS, BREAKOUT KITS, PANELS, CONNECTORS, COUPLERS, ADAPTERS, SPLICE TRAYS, PATCH CORDS, GROUNDING CONNECTIONS, AND ALL OTHER COMPONENTS NECESSARY FOR A COMPLETE AND OPERABLE FIBER OPTIC CABLING SYSTEM. CONTRACTOR SHALL VERIFY FIBER CONNECTOR TYPES WITH DISTRICT PRIOR TO ORDERING MATERIALS.
5. ALL LAN, WIRELESS LAN, AND VOIP TELEPHONE SYSTEM ACTIVE ELECTRONICS INCLUDING BUT NOT LIMITED TO LAN SWITCHES, GBIC MODULES, VOIP TELEPHONE SETS, VOIP TELEPHONE SERVER (INCLUDING ALL FIRMWARE AND SOFTWARE), LAN SERVERS, WIRELESS ACCESS POINTS, ROUTERS, AND INDIVIDUAL WORKSTATIONS AND MONITORS SHALL BE OWNER-FURNISHED CONTRACTOR-INSTALLED UNLESS OTHERWISE NOTED ON THE PLAN DRAWINGS AND SPECIFICATIONS. IN EACH IDF ROOM,
6. ALL FIBER OPTIC CABLE INSTALLED BETWEEN MDF AND IDF ROOMS SHALL BE **SINGLE MODE OS2 12-STRAND** INDOOR/OUTDOOR/RISER-RATED CABLE, UNLESS OTHERWISE NOTED IN THE DISTRICT STANDARDS AND PROJECT SPECIFICATIONS.
7. CONTRACTOR SHALL TERMINATE AND TEST ALL FIBER OPTIC CABLE STRANDS, BOTH ENDS, IN ACCORDANCE WITH THE DISTRICT STANDARDS AND PROJECT SPECIFICATIONS.
8. PROVIDE AND INSTALL ALL **CAT-6** PATCH CORDS AND SINGLE MODE FIBER OPTIC PATCH CORDS IN THE COLORS, QUANTITIES AND LENGTHS PER THE DISTRICT STANDARDS AND PROJECT SPECIFICATIONS. INSTALL ALL PATCH CORDS TO THE OWNER'S SATISFACTION. VERIFY PATCH CORD COLOR AND LENGTHS WITH OWNER PRIOR TO ORDERING MATERIALS. UNLESS OTHERWISE NOTED IN STANDARDS OR SPECIFICATIONS, PROVIDE **ONE (1) 1-FOOT AND ONE (1) 3-FOOT CAT-6** PATCH CORD FOR EVERY **CAT-6** CABLE TERMINATED. UNLESS OTHERWISE NOTED IN STANDARDS OR SPECIFICATIONS, AT EACH IDF PROVIDE (1) SINGLE MODE DUPLEX 1-METER FIBER PATCH CORD, AND AT THE MDF PROVIDE (1) SINGLE MODE DUPLEX 3-METER FIBER PATCH CORD. INCLUDE ALL COSTS IN BASE BID.
9. VERIFY ALL QUANTITIES AND LOCATIONS WITH PLAN DRAWINGS AND SPECIFICATIONS.
10. CONTRACTOR SHALL COORDINATE ALL INSTALLATION WORK WITH THE DISTRICT I.T. DEPARTMENT PRIOR TO COMMENCING WORK.

LOCAL AREA NETWORK SYSTEM BLOCK DIAGRAM

SCALE: N.T.S.

3

IDENTIFICATION STAMP
DIV. OF THE STATE ARCHITECT
APP: 01-120592 INC:
REVIEWED FOR
SS ☑ FLS ☑ ACS ☑
DATE: 7/11/2023

OWNER: San Rafael City Schools

PROJECT NAME: Venetia Valley School Middle School Restroom Addition

CLIENT ADDRESS: Enter address here

REGISTERED PROFESSIONAL ENGINEER
RAYMOND W. SINNETT
No. 15610
Exp. 12/31/2023
ELECTRICAL
STATE OF CALIFORNIA

REVISIONS:

	DESCRIPTION	DATE
1		
2		
3		
4		
5		
6		
7		
8		
9		
10		
11		

PROJECT NO: Project Number

DATE ISSUED: Issue Date

SCALE: As indicated

E3.03

ELECTRICAL DETAILS

tk1sc COLLABORATIVE
11870 Pierce Street, Suite 160
Riverside, California 92505
951.299.4160 www.tk1sc.com

Project Leader - Bill Voller
Electrical Lead - Nikolas Bruno
tk1sc Job #: B2203109.000

SECTION 16010

PART 1 – GENERAL ELECTRICAL SPECIFICATIONS

1.1 WORK INCLUDED:

A. This specification shall apply to all phases of work hereinafter specified, shown on drawings, or as required to provide a complete installation of electrical systems for this project. Work required under this specification is not limited to just the Electrical drawings. Refer to Architectural, Structural, Landscape, and Mechanical/Plumbing drawings as well as all other drawings applicable to this project, which designate the scope of work to be accomplished. The intent of the Drawings and Specifications is to provide a complete and operable electrical system that includes all documents that are a part of the Contract.

1. Work Included: Furnish labor, material, services and skilled supervision necessary for the construction, erection, installation, connections, testing, and adjustment of all circuits and electrical equipment specified herein, or shown or noted on Drawings, and its delivery to the Owner complete in all respects ready for use.

2. The electrical Work includes installation or connection of certain materials and equipment furnished by others. Verify installation details, installation and rough-in locations from the actual equipment or from the equipment shop drawings.

B. Electrical Drawings: Electrical Drawings are diagrammatic, and are intended to convey the scope of work, indicating intended general arrangement of equipment, conduit and outlets. Follow Drawings in laying out Work and verify spaces for installation of materials and equipment based on actual dimensions of equipment furnished.

1.2 QUALITY ASSURANCE

A. Design, manufacture, testing and method of installation of all apparatus and materials furnished under requirements of these specifications shall conform to latest publications or standard rules of the following:

1. Institute of Electrical and Electronic Engineers – IEEE
2. National Electrical Manufacturers' Association – NEMA
3. Underwriter's Laboratories, Inc. – UL
4. National Fire Protection Association – NFPA
5. Federal Specifications – Fed. Spec.
6. American Society for Testing and Materials – ASTM
7. American National Standards Institute – ANSI
8. National Electrical Code – NEC
9. National Electrical Safety Code – NESC
10. Insulated Cable Engineers Association – ICEA
11. American Institute of Steel Construction – AISC
12. State and Municipal Codes In Force In The Specific Project Area
13. Occupational Safety and Health Administration (OSHA)
14. Electronics Industries Association/Telecommunications Industry Association (EIA/TIA)
15. California Electrical Code (where adopted)
16. Local Authority Having Jurisdiction (AHJ) Published Electrical Standards and Codes (as applicable).

B. Perform Work in accordance with the National Electrical Code, applicable building ordinances, and other applicable codes, hereinafter referred to as the "Code." The Contractor shall comply with the Code including local amendments and interpretations without added cost to the Owner. Where Contract Documents exceed minimum requirements, the Contract Documents take precedence. Where code conflicts occur, the most stringent shall apply unless variance is approved.

1. Comply with all requirements for permits, licenses, fees and codes. The Contractor, at Contractor's expense, shall obtain all permits, licenses, fees, special service costs, inspections and arrangements required for Work under this contract, unless otherwise specified.

2. Comply with requirements of the applicable utility companies serving this Project. Make all arrangements with utility companies for proper coordination of Work.

1.3 GENERAL REQUIREMENTS

A. Guarantee: Furnish a written guarantee for a period of one-year from date of acceptance.

B. Wherever a discrepancy in quantity or size of conduit, wire, equipment, devices, circuit breakers, etc., (all materials), arises on the Drawings and/or in the Specifications, the Contractor shall be responsible for providing and installing all material and services required by the strictest condition noted on Drawings and/or in Specifications to ensure complete and operable systems as required by the Owner and Engineer.

C. All Core Cutting, Drilling, and Patching:

1. For the installation of work under this Section, the aforementioned shall be performed under this Section of the Specifications and the Concrete section of the Specifications.

2. No holes will be allowed in any structural members without the written approval of the Project's Structural Engineer.

3. For penetrations of concrete slabs or concrete footings, the work shall be as directed in the Concrete Section of Specifications.

4. The Contractor shall be responsible for patching and repairing surfaces where he is required to penetrate for work under this contract.

5. Penetrations shall be sealed to meet the rated integrity of the surface required to be patched and repaired. The patched surface shall be painted or finished to match the existing surface.

D. Verifying Drawings and Job Conditions:

1. The Contractor shall examine all Drawings and Specifications in a manner to be fully cognizant of all work required under this Section.

2. The Contractor shall visit the site and verify existing conditions. Where existing conditions differ from Drawings, adjustment(s) shall be made and allowances included for all necessary equipment to complete all parts of the Drawings and Specifications.

1.4 WORK IN COOPERATION WITH OTHER TRADES

A. Examine the Drawings and Specifications and determine the work to be performed by the electrical, mechanical and other trades. Provide the type and amount of electrical materials and equipment necessary to place this work in proper operation, completely wired, tested and ready for use. This shall include all conduit, wire, disconnects, relays, and other devices for the required operation sequence of all electrical, mechanical and other systems or equipment.

B. Provide a conduit-only system for low voltage wiring required for control of mechanical and plumbing equipment described in this or other parts of the Contract Documents. Install all control housings, conduits, and backboxes required for installing conduit to the controls.

C. Install separate conduits between each heating, ventilating and air conditioning sensing device and its control panel and/or control motor. Before installing any conduit for heating, ventilating and air conditioning control wiring, verify the exact requirements from the control diagrams provided with the equipment manufacturer's shop drawings.

1.5 TESTING AND ADJUSTMENT

A. Upon completion of all electrical work, the Contractor shall test all circuits, switches, light fixtures, lighting control and dimming systems including distributed systems, UPSs, generators, SPDs, lighting inverters, transfer switches, motors, circuit breakers, motor starter(s) and their auxiliary circuits and any other electrical items to ensure perfect operation of all electrical equipment.

B. Equipment and parts in need of correction, and discovered during such testing, shall be immediately repaired or replaced with all new equipment and that part of the system shall then be retested. All such replacement or repair shall be done at no additional cost to the Owner.

C. All circuit(s) shall be tested for continuity and circuit integrity. Adjustments shall be made for circuits not complying with testing criteria.

D. All test reports, including copies of any required Energy Code Acceptance Forms (e.g. CA Title 24 Acceptance For Code Compliance Forms) should be submitted to the Engineer at completion of project.

1.6 IDENTIFICATION

A. Nameplates shall be provided for unit substations, switchgear, switchboards, distribution boards, distribution panels, panel boards, motor control centers, transformers, transfer switches, contactors, starters, disconnect switches, enclosed circuit breakers/switches, Inverters, UPSs, PDUs, RDCs, SPDs, lighting control panels, dimming panels, door releasing system panels, fire alarm/central monitoring terminal cabinets/power supplies/control panels, and all low voltage system terminal and control cabinets.

1. Nameplate inscriptions shall be identical to the equipment designations indicated in plans and specifications. Nameplates shall be engraved with the device designation/identification on the top line, source identification for the device on the 2nd line per NEC, or CEC where adopted, Art **408.4** and load designation for the device on the bottom line. Where load designation consists of a branch circuit, omit bottom line. Where device designation is not indicated on plans/specifications, Contractor shall submit a written clarification request to the Engineer.

Example: Transformer 1TA
Source Disconnecting Location: Switchboard MSA located in RM 110
Load: Panels 1LA & 1LB

2. All circuit breakers/fuses in switchgear, switchboards, distribution boards, distribution panels, UPS output circuit breakers, PDU sub-feed circuit breakers and motor control centers shall have individual nameplates located immediately adjacent to the respective device. Nameplate inscription shall identify the downstream equipment or device served by the circuit breaker or fuse.

B. Identification nameplates, unless otherwise noted (UON), shall be laminated/extruded modified acrylic that is 3/32" thick, UV-stabilized, matte finish, suitable for use in 180 deg F ambient, with beveled edges and engraved white letters 3/8" high, minimum, on 1-1/2" high black background (utility/normal and optional standby power systems) for single line of text. Where two lines of text are required, provide min. 2" high nameplate. Where three lines of text are required, provide min. 2.5" high nameplate. Provide white letters on red background for all NEC, or CEC where adopted, **Article 517** essential power systems, **Article 700** Emergency Systems, **Article 701** Legally required standby systems and **Article 708** COPS.

C. Identification nameplates for new switchgear, switchboards, distribution boards, distribution panels, panelboards and motor control centers shall be attached with switchgear manufacturer-provided screws via switchgear manufacturer factory pre-drilled holes. A factory option to rivet identification nameplates to the equipment is only acceptable if screw-fastened nameplates are not an available option from the switchgear manufacturer. Field drilling or other mechanical attachment methods that change/void the NEMA or NTRL rating of the enclosure are strictly forbidden.

D. Identification nameplates for transformers, transfer switches, disconnect switches, enclosed circuit breakers/switches, inverters, UPSs, PDUs, RDCs, SPDs, lighting control panels, dimming panels, door-releasing system panels, terminal cabinets and all circuit breakers/fuses in switchgear, switchboards, distribution boards, distribution panels, UPS output circuit breakers, PDUs, PDU sub-feed circuit breakers, and motor control centers shall be attached to the equipment by self-adhesive backing integral to the nameplates. When equipment is located outdoors, provide nameplates without self-adhesive backing and attach to equipment using weather-rated, UV-resistant epoxy. In all cases, clean surfaces before applying identification nameplates parallel to equipment lines.

E. Warning Placards, as required by General Single Line Diagram Notes for multiple power sources, or instruction placards, as required for all kirk-key interlock schemes, all UPS bypass procedures or as required elsewhere in the plans/specifications shall be engraved 1/2" high with white lettering on a red background using the same material specified for identification nameplates with a self-adhesive backing. Warning/instruction placards shall be attached to the face of the equipment directly related to the placards. Provide a formal placard submittal for review by the Engineer prior to ordering any warning/instruction placards. In all cases, clean surfaces before applying warning/instruction placards parallel to equipment lines.

F. Receptacles that are part of a UL-listed under floor computer room whip assembly, ceiling and/or cable/ladder tray-mounted receptacles used in lab, manufacturing, commercial kitchen environments or that are serving telcom/data/AV racks and cabinets shall have identification nameplates located on the wiring device plate cover. Nameplates shall be self-adhesive, 3/32" thick Micarta with beveled edges, engraved 1/4" high white lettering on black background with serving power source, circuit identification and NEMA/IEC receptacle type. Use of two (2) separate nameplates per device plate cover is acceptable. Affix nameplates to be visible when plugs are occupying receptacles.

G. See wiring device section of this specification for additional wiring device plate cover labeling requirements.

H. See drawings for panel board schedule directory installation requirements.

I. See conduit installation section of this specification for conduit labeling requirements.

1.7 FINAL INSPECTION AND ACCEPTANCE

A. After all requirements of the Specifications and/or the Drawings have been fully completed, representatives of the Owner will inspect the work. Contractor shall provide competent personnel to demonstrate the operation of any item or system to the full satisfaction of each representative.

B. Final acceptance of the work will be made by the Owner after receipt of approval and recommendation of acceptance from each representative.

1.8 RECORD DRAWINGS

A. Drawings of Record: The Contractor shall provide and keep up-to-date, a complete record set of drawings. These shall be corrected daily and show every change from the original Drawings. This set of prints shall be kept on the job site and shall be used only as a record set. This shall not be construed as authorization for the Contractor to make changes in the layout without definite instruction in each case. Upon completion of the work, a set of reproducible Contract Drawings shall be obtained from the General Contractor and all changes as noted on the record set of prints shall be incorporated thereon with black ink in a neat, legible, understandable and professional manner. Refer to the Supplementary General Conditions for complete requirements.

1.9 APPROVALS, EQUALS, SUBSTITUTIONS, ALTERNATIVES, NO KNOWN EQUAL

A. Approvals: Where the words (or similar terms) "approved", "approval", "acceptable", and "acceptance" are used, it shall be understood that acceptance by the Owner, Architect and Engineer are required.

B. Equal: Where the words (or similar terms) "equal", "approved equal", "equal to", "or equal by", "or equal" and "equivalent" are used, it shall be understood that these words are followed by the expression "in the opinion of the Owner, Architect, and Engineer". For the purposes of specifying products, the above words shall indicate the same size, made of the same construction materials, manufactured with equivalent life expectancy, having the same aesthetic appearance/style (includes craftsmanship, physical attributes, color and finish), and the same performance.

C. Substitution: For the purposes of specifying products, "substitution" shall refer to the submittal of a product not explicitly approved by the construction documents/specifications.

1. Substitutions of specified equipment shall be submitted and received by the Engineer ten (10) days prior to the bid date for review and written approval. Regulatory Agency approval for all substitutions will be the sole responsibility of the contractor. To receive consideration, requests for substitutions must be accompanied by documentary proof of its equality with the specified material. Documentary proof shall be in letter form and identify the specified values/materials alongside proposed equal values/materials. In addition, catalog brochures and samples, if requested, must be included in the submittal. ONLY PRE-BID APPROVED PRODUCTS, ISSUED VIA A FORMAL BID ADDENDUM TO ALL BIDDERS, WILL BE ALLOWED ON THE PROJECT. REGARDLESS OF THE APPROVAL ON ANY SUBSTITUTION, ALL BIDS SHALL BE BASED ON THE PRODUCTS EXACTLY AS SPECIFIED. PRICING FOR EACH APPROVED SUBSTITUTION SHALL BE INCLUDED IN THE BID SUBMITTAL AS A SEPARATE LINE ITEM.

2. In the event that written authorization is given for a substitution after award of contract, the Contractor shall submit to the Engineer quotations from suppliers/distributors of both the specified and proposed equal material for price comparison, as well as a verification of delivery dates that conform to the project schedule.

3. In the event of cost reduction, the Owner will be credited with 100 percent of the reduction, arranged by change order.

4. The Contractor warrants that substitutions proposed for specified items will fully perform the functions required.

D. Alternates/Alternatives: For the purposes of specifying products, "alternatives/alternates" may be established to enable the Owner/Architect/Engineer to compare costs where alternative materials or methods might be used. An alternate price shall be submitted in addition to the base bid for consideration. If the alternate is deemed acceptable, written authorization will be issued.

E. No Known Equal: For the purposes of specifying products, "No Known Equal" shall mean that the Owner/Architect/Engineer is not aware of an equivalent product. The Contractor will need to submit a "Substitution" item, per the requirements listed above, if a different product is proposed to be utilized.

1.10 SHOP DRAWINGS/SUBMITTALS

A. Shop Drawings/Submittals, unless required otherwise by general project specifications or instructions to bidders, shall be submitted in electronic format (PDF) to include a Letter of Transmittal (PDF), which shall give a list of the drawings submitted with dates and/or sytem(s) components contained within the submittal. Drawings and material cut sheets shall be complete in every respect and edited/marked to indicate specific items being provided. Printed/Hard copies are not acceptable.

B. The shop drawings/submittals shall be marked with the name of the project, numbered consecutively, and bear the approval of the Contractor as evidence that the Contractor has checked the drawings. Any drawings submitted without this approval will be returned to the Contractor for resubmittal.

C. If the shop drawings show variations from the requirements of the Contract because of standard shop practice or other reasons, the Contractor shall make specific mention of such variations in the Contractor's letter of transmittal. If the substitution is accepted, the Contractor shall be responsible for proper adjustment that may be caused by the substitution. Samples shall be submitted when requested.

D. Only products listed as "Equal" within the contract documents, along with formally approved "Substitutions" will be reviewed. Products not conforming to these items will not be reviewed and will be returned to the Contractor for re-submittal.

E. Review comments used in response to shop drawings/submittals are:

1.	"No Exception Taken"	Product approved as submitted.
2.	"Furnish as Corrected"	Re-submittal not required, although the Contractor shall provide the submitted product with corrections as noted.
3.	"Revise and Resubmit"	Re-submittal required with corrections as noted.
4.	"Rejected"	Re-submittal required based upon the originally specified product.

F. Shop drawings shall be submitted on the following, but not limited to:

1. Lighting fixtures, lamps and ballasts.
2. Switchgear, switchboards, distribution boards, motor control centers, panelboards, and bus ducts; complete with overcurrent device information.
3. Transformers.
4. Fire Alarm System/Central Monitoring System.
5. Wiring Devices.
6. Lighting control products/dimming system products.
7. Pull boxes and underground vaults.
8. Terminal cabinets.
9. Lighting inverters, UPSs, RDCs, PDUs, generators, transfer switches, SPD systems.
10. Cable tray, flexible cable tray and cable runway.
11. Power poles and floor boxes.
12. Arc flash, short-circuit, and coordination studies.
13. All other products called out on drawings that call for shop drawing submittal.

1.11 MAINTENANCE, SERVICING, INSTRUCTION MANUALS AND WIRING DIAGRAMS

A. Prior to final acceptance of the job, the Electrical Contractor shall furnish to the Owner at least four (4) copies of operating and maintenance and servicing instructions, as well as four (4) complete wiring diagrams for the following items or equipment:

1. Lighting control systems/dimming systems.
2. Fire Alarm System.
3. Transformers.
4. Switchgear, switchboards, distribution boards, motor control centers, panel boards, and bus ducts; complete with overcurrent device information.
5. Lighting inverters, UPSs, PDUs, generators, transfer switches, SPD systems.

B. All wiring diagrams shall specifically cover the system supplied. Typical drawings will not be accepted. Four (4) copies shall be presented to the Owner.

1.12 INTERRUPTION OF SERVICES/SERVICE SHUTDOWN

A. Any interruption of electrical services, electrical circuits, electrical feeders, signal systems, communication systems, fire alarm systems, etc., required to perform work shall meet the specific prior-approval requirements of the Owner. Such work shall be scheduled with the Owner to be performed at the Owner's convenience.

B. Interruptions/outages of any of the Owner's systems and services mentioned above shall be scheduled to occur during other than the Owner's normal business hours. Any overtime costs shall be borne by the Contractor.

C. See drawings for any additional requirements regarding outages, interruption and any temporary services required.

PART 2 – PRODUCTS

2.1 MATERIALS

A. Materials and Equipment: All electrical materials and equipment, including custom-made equipment, shall be new and shall be listed by Underwriter's Laboratories (UL) and bear their label or be listed and certified by a Nationally Recognized Testing Lab (NRTL) that is also recognized by the local Authority-Having-Jurisdiction (AHJ).

B. Switchgear/Switchboards/Distribution Boards/Motor Control Centers:

1. See general single line diagram notes on drawings for more information.

C. Panelboards – Branch Circuit:

1. See drawings for panel board schedules and specifications.

D. Transformers:

1. See drawings for transformer schedules and specifications.

E. Lighting Fixtures:

1. See drawings for lighting fixture and lamp schedules and additional specifications. Furnish, install, and connect a lighting fixture at each outlet where a lighting fixture type symbol (designated on plans) is shown as being installed. Each fixture shall be complete with all required accessories including sockets, glassware, boxes, spacers, mounting devices, fire rating enclosure and lamps.

2. Ballasts: See lighting fixture schedule notes. All noisy ballasts shall be replaced at no cost to the Owner.

3. Lamps: See lamp/fixture schedule and lamp/lighting fixture schedule notes.

F. Wiring Devices:

1. Provide wiring devices indicated per plan. Devices shall be specification grade. Acceptable manufacturers are Leviton, Pass & Seymour and Hubbell. Provide all similar devices of same manufacturer, unless indicated otherwise. All device colors shall be selected from the full range of manufacturer standard color options as selected by the Architect. This direction will be provided in the shop drawing review process.

a. Wiring Devices (Decora)

1) Convenience Receptacle	#16252-COLOR
2) Dedicated Receptacle	#16352-COLOR
3) Convenience I.G. Receptacle	#16262-IG-COLOR
4) Dedicated IG Receptacle	#16362-IG-COLOR
5) Convenience G.F.C.I. Receptacle	#GFNT1-COLOR
6) Dedicated G.F.C.I. Receptacle	#GFNT2-COLOR
7) Convenience Hospital Grade Receptacle	#16252-HG?-COLOR
8) Dedicated Hospital Grade Receptacle	#16352-HG?-COLOR
9) Convenience G.F.C.I. Hospital Grade Receptacle	#GFNT1-HG?
10) Dedicated G.F.C.I. Hospital Grade Receptacle	#GFNT2-HG?
11) Tamper Resistant Convenience Receptacle	#TDR15-COLOR
12) Tamper Resistant Dedicated Receptacle	#TDR20-COLOR
13) Tamper Resistant GFCI Receptacle	#GFTR2-COLOR
14) Tamper Res. Conv. G.F.C.I. Hospital Grade Receptacle	#GFTR1-HG COLOR
15) Tamper Res. Ded. G.F.C.I. Hospital Grade Receptacle	#GFTR2-HG COLOR
16) Weather/Tamper Resistant GFCI Receptacle	#GFWT2-COLOR
17) Convenience Simplex Receptacle	#16251-COLOR
18) Dedicated Simplex Receptacle	#16351-COLOR
19) Recessed Clock Receptacle	#5361-CH-COLOR (Non-Decora)
20) Single Pole Switch	#5621-2-COLOR
21) Double Pole Switch	#5622-2-COLOR
22) Three Way Switch	#5623-2-COLOR
23) Four Way Switch	#5624-2-COLOR
24) Pilot Light Switch "On"	#5628-2-COLOR
25) Pilot Light Switch "Off"	#5631-2-COLOR
26) Projection Screen Switch	#5657-2-COLOR
27) Low Voltage Momentary Switch	#5657-2-COLOR
28) Keyed Switch	#1221-2L-COLOR (Non-Decora)
29) Door Jam Switch	#1865-COLOR

b. Use of dedicated receptacles is required where plans depict a branch circuit supplying only a single simplex or duplex receptacle. Use of controlled receptacles is required where depicted on plans – See controlled receptacle specifications for additional information.

2. I.G. (isolated ground) receptacle bodies shall be of a basic color specified above with an orange triangle to symbolize isolated ground.

3. H.G. (hospital grade) receptacle bodies shall be of a basic color specified above with a green circle to symbolize hospital grade.

4. When shown circuited with an I.G. conductor, all receptacles shall be of the I.G. type. As an example, a NEMA L6-30R denoted on the plans and shown circuited with an I.G. conductor shall be an I.G. version of the receptacle.

5. Wiring devices located in wood finished areas shall generally be black unless otherwise indicated by the Architect.

6. Wiring devices located in mirrors shall generally be white with stainless steel cover plates unless otherwise indicated by the architect.

7. In addition to other device requirements listed elsewhere in this specification and NEC, or CEC where adopted, **Articles 406.12 & 517.18**, all 125V & 250V, 15A and 20A, non-locking receptacles shall be Tamper-Resistant when located in the following locations:

a. In dwelling units per NEC, or CEC where adopted, **Article 210.52**
b. In guest rooms and guest suites of hotels and motels
c. In child care or daycare facilities.
d. In preschool and elementary education facilities
e. In business offices, corridors, waiting rooms and the like in clinics, medical and dental offices and outpatient facilities.
f. In a subset of Assembly Areas outlined in NEC, or CEC where adopted, **Article 518.2** including transportation waiting areas, gymnasiums, skating rinks, and auditoriums.
g. In dormitories.
h. In pediatric care areas per NEC, or CEC where adopted, **Article 517.18 (C)**.

8. Wiring devices shall be listed "hospital grade", and so identified, in the following locations:

a. Patient bed locations within general care areas per NEC, or CEC where adopted, **Article 517.18(B)**.
b. Patient bed locations within critical care areas per NEC, or CEC where adopted, **Article 517.19(B)**.
c. In "other-than-hazardous" anesthetizing locations per NEC, or CEC where adopted, **Article 517.61(C)(2)**.

9. Wiring device cover plates located on recessed boxes shall be commercial grade nylon. Plate color shall match wiring device color UON on plans. Cover plates utilized on surface mounted boxes shall be metal. Plastic cover plates are unacceptable.

10. Except as otherwise noted, all wiring device plates on the project shall be labeled with panel and circuit number(s) utilizing a Brother P-Touch labeling system with 1/2" tape (yellow on black) or equal by Herman-Tellerman or Panduit. Locate label on the concealed side of the wiring device plate. Handwritten labels are unacceptable.

11. The Contractor shall provide duplex receptacle outlets in the appropriate configurations necessary to comply with applicable energy code requirements for controlled receptacles and as shown on plans. All wiring devices indicated to be controlled receptacles shall be NEMA-approved, electrical code-compliant with factory markings on the face of the receptacle(s) with the word "Controlled" or utilize further markings and symbols to indicate which receptacles on each outlet is/are controlled. Stickers, field-applied markings or other non-permanent markings are not acceptable. Where a GFCI receptacle outlet is required to be controlled, provide an adjacent controlled duplex receptacle outlet connected on the load side of the GFCI outlet. Generally, one receptacle in a duplex receptacle outlet is required to be controlled. It may be the lower receptacle or upper receptacle based on manufacturer offering. However, the controlled receptacle location within a controlled receptacle outlet shall remain consistent throughout the project. Where an existing duplex receptacle outlet is required to be controlled, provide a new wiring device with the appropriate control configuration necessary to comply with plans. All controlled receptacles shall be connected to a branch circuit controlled by an occupancy sensor-based or relay panel lighting control system. Acceptable manufacturers are Leviton, Pass and Seymour & Hubbell.

12. The following wiring device plates shall have custom engraving:

a. Key operated switches, switches with pilot lights, and switches for the control of motors, heaters and ventilators. Engraving shall be black and occur on the exposed side of the plate indicating the motor, heater, or ventilator controlled.

b. Receptacles on optional standby generator and/or UPS power shall have custom engraved plates with the words "Generator" or "UPS" in black letters. In addition, where located in telecommunications closets, IDFs, server rooms, data centers, labs (wet, dry or electronic) indicating panel board and circuit number.

c. For Health Care Facilities, provide custom engraved device cover plates, for all devices, indicating panel board and circuit number. Devices served by normal/utility power circuits shall have black lettering; devices served by essential electrical system power circuits shall have red lettering.

d. All stainless steel and nylon device plates shall be engraved using a rotary engraving process except for black lettering on stainless steel device plates which may be accomplished via laser etching process. All lettering shall be 3/16" high. Provide a dimensioned submittal drawing detailing a typical device faceplate with engraving.

G. Weatherproof Outlet Covers/Assemblies: All Receptacles identified as weatherproof on the drawings shall be weather-resistant, tamper-resistant, GFCI type and equipped as follows:

1. Type WP-A: Recessed wall box with a hinged, lockable, cast aluminum, self-closing, gasket-equipped door that is wet location-listed raintight while "in use". Unit shall comply with NEC, or CEC where adopted, **Article 406.9(A) and (B)**. UON on drawings, provide a minimum of 2 separate compartments suitable for installation of power receptacles, AV or communications outlets. Additionally, unless otherwise noted on drawings, provide the following:

a. A 20A Weather-resistant, tamper-resistant, GFCI duplex receptacle in the first compartment. Provide branch circuiting per plans.
b. A blank metal plate suitable for field installation of power, AV or communications devices in the second compartment.
c. Where indicated on plans as requiring data, AV, or other low voltage service outlet, provide min. 3/4" C.O. with pull string routed from the second compartment to nearest low voltage pull box. Where shown mounted in a building wall, any blank/unused compartment shall be equipped minimum 3/4" C.O. with pull string routed to the nearest accessible ceiling space.
d. See wiring device section of this specification for additional wiring device plate cover labeling requirements.
e. (1) key minimum per device (minimum of (2) per project) to the Owner's project manager upon completion of project.
f. Custom color powder coat finish as selected by Architect – Include all costs in base bid for same.
g. In locations with sufficient wall depth, provide 6" wide x 6" tall x 5-1/2" deep recessed wall box (C.W. Cole #TL310-WCS-K1-CUSTOM COLOR).
h. In locations utilizing shallow stud walls construction or other walls of insufficient depth, provide 10-3/4" wide x 7-3/8" tall x 3-7/8" deep recessed wall box (C.W. Cole #TL310-WCS-SH-K1-CUSTOM COLOR).
i. See drawings for additional details.

2. Type/Subscript WP-B: Wet location-listed raintight while "in use" cast copper-free aluminum, extra-duty, lockable cover with baked aluminum lacquer finish and one-gang, weather-resistant, tamper-resistant GFCI receptacle. Hubbell WP26E series. Polycarbonate covers are unacceptable. Unit shall comply with NEC, or CEC where adopted, **Article 406.9(A) and (B)**. Contractor shall powder coat cover assembly to a custom color where receptacle locations are deemed by the Architect to be in aesthetically sensitive or public spaces. Custom color as selected by Architect.

3. Type WP-C: (C.W. Cole #TL310-WCS-PED-ADA-K1-CUSTOM COLOR or #TL310-WCS-PED-K1-CUSTOM COLOR) pedestal device box with a hinged, lockable, cast aluminum, self-closing, gasket-equipped door that is wet location – listed raintight while "in use". Unit shall comply with NEC, or CEC where adopted, **Article 406.9(A) and (B)**. UON on drawings, provide a minimum of 2 separate compartments suitable for installation power receptacles, AV or communications outlets. Additionally, unless otherwise noted on drawings, provide the following:

a. A 20A weather-resistant, tamper-resistant, GFCI duplex receptacle in the first compartment. Provide branch circuiting per plans.
b. A blank metal plate suitable for field installation of power, AV or communications devices in the second compartment.
c. Where indicated on plans as requiring data, AV or other LV outlet, provide min. 3/4" C.O. with pull string routed from the second compartment to nearest low voltage pull box.
d. See wiring device section of this specification for additional wiring device plate cover labeling requirements.
e. 1 key minimum per device (minimum of 2 per project) to the Owner's project manager upon completion of project.
f. Include all costs in base bid for ADA version (22.5" tall) of pedestal box. Prior to ordering material, contractor shall coordinate with architect and/or AHJ to determine which pedestal box locations do not require ADA compliance and may be changed to the standard (11.5" tall) version of the pedestal box.
g. Custom color powder coat finish as selected by Architect. Include all costs in base bid for same.
h. See drawings for additional details.

4. Type/Subscript WP-D: Damp location-listed (not-raintight-in-use) cast copper-free, pad lockable, die-cast aluminum cover with baked aluminum lacquer finish and one gang GFCI receptacle. Hubbell/rayco 502?/503? Series. Polycarbonate covers are unacceptable. Unit shall comply with NEC, or CEC where adopted, **article 406.9(A) and (B)**. Custom color powder coat finish as selected by Architect. Include all costs in base bid for same.

H. Motor Controllers/Starters: See drawings for motorized equipment schedules and specifications.

I. Circuit Breakers.

1. Service entrance circuit breakers smaller than 400A frame shall be thermal-magnetic trip with inverse time current characteristics unless otherwise indicated below. Service entrance main circuit breakers and main circuit breakers, 400A frame and larger shall be 100% rated, solid-state type as outlined in this specification. All other service entrance circuit breakers, 400A frame and larger, shall be 100% rated, solid-state type as outlined in this specification.

2. All non-service entrance circuit breakers 225A and larger shall be thermal magnetic type and have continuously adjustable instantaneous pick-ups of approximately 5 to 10 times trip rating. Breakers shall have either tamper-resistant rating dials or easily changed trip rating plugs with trip ratings as indicated on the Drawings. Rating plugs shall be interlocked so they are not interchangeable between frames. Additionally, all non-service entrance circuit breakers, 600A frame and larger, located in 480V 3 phase, 3-wire or 277/480V, 3 phase 4-wire switchgear, distribution boards, panel boards or busway plugs, shall be solid state, 100% rated. Breaker shall have built-in test points for testing long delay, short delay and instantaneous, and ground fault (where shown) functions of the breaker by means of a 120V operated test kit. Contractor shall utilize a test kit capable of testing all breakers 400A and above – at the Engineer's request.

3. All non-service entrance circuit breakers less than 225A shall be molded plastic case, air circuit breakers conforming to UL 489. Provide breakers with thermal magnetic trip units, and a common trip bar for two- or three-pole breakers, connected internally to each pole so tripping of one pole will automatically trip all poles of each breaker. Provide breakers of trip-free and trip-indicating bolt-on type, with quick-make, quick-break contacts. Provide single two- or three-pole breaker interchangeability. Provide padlocking device for circuit breakers as shown on the Drawings.

4. Where a Current Limiting Circuit Breaker (CLCB) is indicated on drawings or as required elsewhere in this specification, provide a UL listed current limiting thermal magnetic circuit breaker(s) UON. An independently operating limiter section within a molded case is not allowed. Coordinate CLCB ratings as required to protect electrical system components on the load side of the CLCB to include, but not limited to, protecting automatic transfer switches, panel boards and lighting control panels.

5. Where a solid state circuit breaker is indicated on drawings or as required elsewhere in this specification, provide a solid state circuit breaker with minimum five function complete with built-in current transformers. The five functions shall be independently adjustable and consist of Overload/Long Time Amp Rating, Long Time Delay, Short Time Delay, Short Circuit/Instantaneous Pick-up, but may also include Shunt Trip and/or Ground Fault if so indicated on the Drawings. Rating plugs shall be interlocked so they are not interchangeable between frames. Breaker shall have built-in test points for testing long delay and instantaneous, and ground fault (where shown) functions of the breaker by means of a 120V operated test kit. Contractor shall utilize a test kit capable of testing all breakers 400A and above, at the Engineer's request.

6. Circuit breakers, 1200A Frame or larger, or circuit breakers with sensors or adjustable trip settings, 1200A or larger, shall be equipped with an Energy Reducing Maintenance Switch that complies with NEC, or CEC where adopted, 240.87 (B) (3) unless specified elsewhere with an alternate arc energy reduction method allowed by this same code section.

7. Ground Fault Interrupting Breakers: Provide with molded plastic case, air circuit breakers, similar to above with ground fault circuit interrupt capability, conforming to UL Class A, Group 1.

8. Arc Fault Interrupting Breakers: Provide with molded plastic case, air circuit breakers, similar to above with arc fault circuit interrupt capability, conforming to UL 1699. Provide on all dwelling-unit circuits supplying bedrooms, sleeping quarters, etc., as required to comply with NEC, or CEC where adopted, **Article 210.12.**

9. Tandem or half-sized circuit breakers are not permitted.

10. Series-Rated Breakers: UL listed series-rated combinations of breakers can be used to obtain panelboard-interrupting ratings shown on Drawings. If series-rated breakers are used, switchboards, distribution boards and panelboards shall be appropriately labeled to indicate the use of series rated breakers. Shop drawing submittal shall include chart of UL listed devices which coordinate to provide series rating.

11. Circuit breakers shall be standard interrupting construction. Panelboards shall accept standard circuit breakers up to 100A.

12. Circuit breaker handle accessories shall provide provisions for locking handle in the on or off position.

13..Shunt trip equipped circuit breakers shall be provided on all elevator feeders.

14. Temperature compensating circuit breaker(s) shall be provided when located in outdoor enclosure(s) or when located in an enclosure subject to high ambient heat due to nearby industrial processes, etc.

15. Provide 75 degree Celsius-rated conductor lugs/lug kits as required on all circuit breakers to accept conductor quantities and sizes shown on drawings.

16. All circuit breaker terminations shall be suitable for use with 75 degree Celsius ampacity conductors. Listed, dual-rated pin terminals, straight or offset, are acceptable for use to in accommodating oversized or parallel conductor installations.

17. Circuit breakers serving Fire Alarm or Central Monitoring panels and power supplies shall be red in color and lockable in the "ON" position.

J. Disconnect Switches:

1. Non-fusible or fusible, heavy-duty, externally operated horsepower-rated, 600V A.C: Provide NEMA 3R, lockable enclosures for all switches located on roof tops, in wet or damp areas and in any area exposed to the elements.

2. Fusible switches shall be Class "R" when 600A or less, and Class "L" when greater than 600A.

3. Amperage, horsepower, voltage, and number of poles per drawings: All shall be clearly marked on the switch nameplate.

4. Provide the Owner's project manager with one (1) spare set of fuses and two (2) sets of fuse clips/fuses for every set of fuses on the project.

K. Fuses:

1. Provide fuses at all locations shown on the Drawings and as required for supplemental protection:

a. Fuses shall be manufactured by Bussmann, Shawmut or equal.
b. All fuses shall be the product of a single manufacturer.

2. Main and Feeder Protection:

a. Protective devices rated greater than 600A: Provide Bussman Hi-Cap fuses, Class L, current-limiting, having an interrupting rating of 200,000A RMS.
b. Protective devices rated 600A or less: Provide Bussman Class R fuses, Class RK series current-limiting fuses, having an interrupting rating of 200,000A RMS.

3. Motor Protection:

a. Where rating of protective device is greater than 600A: Provide Bussman Hi-Cap fuses, Class L, current-limiting, having an interrupting rating of 200,000A RMS.
b. Where rating of protective device is 600A or less: Provide Bussman Class RK series current-limiting fuses, having an interrupting rating of 200,000A RMS.
c. Where fuses feeding motors are indicated, but not sized: It shall be the responsibility of the Contractor to coordinate the fuse size with the motor to provide proper motor running protection.
d. When rejection type fuses are specified (Class RK series) the fuse holder of all switches (specified in other Sections) shall be suitable for the fuses provided.

L. Cable Tray, Flexible Cable Tray and/or Cable Runway:

1. See drawings for Cable Tray, Flexible Cable Tray and/or Cable Runway specifications.

M. Uninterruptible Power Systems (UPS):

1. See drawings for UPS schedules and specifications.

N. Power Distribution Units (PDU):

1. See drawings for PDU schedules and specifications.

O. Generator Systems:

1. See drawings for Generator schedules and specifications.

P. Transfer Switches:

1. See drawings for Transfer Switch schedules and specifications.

Q. Lighting Control/Dimming Systems:

1. See drawings for Lighting Control and/or Dimming Systems schedules and specifications.

2. Wall box dimmers shall be rocker-type as manufactured by Lutron (no known equal except as noted below). Dimmers and dimmer faceplates shall match the color of adjacent switches and faceplates. Dimmers and dimmer faceplates in wood finished areas shall generally be black unless otherwise indicated by the Architect. The Contractor shall obtain written approval of the Architect regarding final dimmer and dimmer faceplate color selection prior to ordering material. Multiple dimmers/switches shall be ganged together with a common cover plate. Provide dimmers as follows:

a. Incandescent:	Lutron DIVA DV-10P or DV-103P (3-way) (1000 Watt max.)
b. Electronic Low Voltage:	Lutron DIVA DVELV-300P or DVELV-303P-(3-way) (300 Watt)
c. Magnetic Low Voltage:	Lutron DIVA DVLV-10P or DVLV-103p (3-way) (800 Watt max.)
d. Fluorescent (3-Wire):	Lutron DIVA DVF-103P (single/3way, 8A @ 120V) or DVF-103P-277 (single/3way, 6A @ 277V)
e. Fluorescent (0-10V):	Lutron DIVA DVTV with PP-???H Power Pack
f. Fluorescent (Lutron Tu-Wire):	Lutron DIVA DVFTU-5A3P with Lutron H.P. module where required.
g. LED (0-10V):	Lutron DIVA DVTV with PP-???H Power Pack
h. Screw Base CFL/LED:	Lutron DIVA DVCL-153P
i. Fan Control:	Lutron DIVA DVFSQ-F (1.5A @ 120V max, 3 speed, single pole, 3-way)

3. Contractor shall verify if dimmer(s) requires derating when ganged. Contractor shall provide, and provide connections to, additional Lutron Power Modules, Lutron Power Packs, and/or Lutron Interface Modules where required to accommodate loads higher than dimmers standard or derated load-carrying capacity. Note – contractor may provide a Lutron recommended dimmer type (typically a #DVF-103P unit) to control the necessary power modules or interface devices.

R. Fire Alarm System/Central Monitoring System:

1. See drawings for Fire Alarm System or Central Monitoring System specifications.

S. Surge Protective Device (SPD):

1. See drawings for SPD specifications.

T. Conduit:

1. Galvanized Rigid Conduit (GRC) shall be full weight threaded type steel. Steel conduit shall be protected by overall zinc coating to inside and outside surfaces, applied by the hot dip, metallizing, or sherardizing process.

2. Intermediate Metal Conduit (IMC) shall be hot-dipped galvanized in accordance with UL 1242, and meet Federal Specification WWC-581 (latest revision).

3. Electrical Metallic Tubing (EMT) shall be zinc-coated steel with baked enamel or plastic finish on inside surfaces except as noted below. EMT shall be dipped in a chromic acid bath to chemically form a corrosion-resistant protective coating of zinc chromate over galvanized surface.

4. Flexible metal conduit shall be constructed of aluminum or hot-dipped galvanized steel strips wound spirally with interlocking edges to provide greatest flexibility with maximum strength. Interior surfaces shall be smooth and offer minimum drag to pulling in conductors. Used only as directed in writing by the Engineer with the exception of 400 Hz feeders and 400 Hz branch circuits which shall be run in flexible aluminum conduit.

5. Liquid-tight conduit (Seal-Tite) shall be galvanized steel flexible conduit as above except with moisture and oil-proof jacket, pre-cut lengths and factory-installed fittings. For outdoor installations and motor connections only unless otherwise noted on drawings.

6. Factory assembled, or off-site assembled wiring systems (such as Metal Clad (MC) Cable, Type AC Cable, Type NM Cable, Type BX Cable, etc.) shall not be used unless otherwise indicated in the Allowed Specification Deviations Section or Deductive/Additive Alternate Pricing Section generally located on the symbols list drawing.

7. When approved for use in the Allowed Specification Deviations Section, generally located on the symbols list drawing, MC cables shall be allowed for lighting branch circuits (homeruns shall be EMT), receptacle branch circuits (homeruns shall be EMT) and poke-thru fed systems furniture homeruns. MC shall not be used where exposed, except for a maximum 6' length for final connections to light fixtures, or terminate in electrical panelboards or distribution boards. Equipment ground conductor shall be green. Isolated ground conductor shall be green with yellow stripe. Provide 600V rated aluminum or lightweight steel interlocking armor Metal Clad (MC) cable with copper conductors, THHN (90 degree C) insulation, and integral equipment grounding conductor and isolated grounding conductor as required. Type AC cable listed for use in patient care areas for non-essential electrical system branch circuits per NEC, or CEC where adopted, **Article 517.13** shall be required in such areas in lieu of MC cable. Type AC and MC cable shall not be used for essential electrical system branch circuits. MC cable shall be manufactured to Underwriters Laboratories Standard 1569. See Part 3 – Execution in this specification for additional installation requirements.

8. Nonmetallic Flexible Tubing (ENT) shall not be used unless otherwise indicated in the Allowed Specification Deviations Section or Deductive/Additive Alternate Pricing Section generally located on the symbols list drawing. Use of ENT, if allowed, is strictly limited to use in CMU walls and parking structure decks or as directed in writing by the Engineer. See Execution section of this specification for additional installation requirements.

9. Non-Metallic Conduit:

a. Polyvinyl chloride (PVC) rigid conduit, Schedule 40, Type II for underground installation only with solvent welded joints, conforming to UL requirements, listed for exposed and direct burial application.
b. Conduit and fittings shall be produced by the same manufacturer.

10. Fire-rated MC Cable:

a. 2-hour fire-rated, polymer insulated 600V MC cable listed and conforming to UL 2196 and UL 1569 requirements for installation as an Electrical Circuit Protective System for use in complying with NEC, or CEC where adopted, **Articles 695 and 700.** Where adopted, cable sheath shall be suitable for use as a NEC or CEC equipment grounding conductor, and shall be listed for use in wet locations to 90 degrees C (Raychem or equal).
b. Cable connectors shall be brass MC connectors.

IDENTIFICATION STAMP
DIV. OF THE STATE ARCHITECT
APP: 01-120592 INC:
REVIEWED FOR
SS ☑ FLS ☑ ACS ☑
DATE: 7/11/2023

OWNER: San Rafael City Schools

PROJECT NAME: Venetia Valley School Middle School Restroom Addition

CLIENT ADDRESS: Enter address here

REGISTERED PROFESSIONAL ENGINEER
RAYMOND W. SWARTZ
No. E15610
Ex. 12/31/2023
ELECTRICAL
STATE OF CALIFORNIA

REVISIONS:

	DESCRIPTION	DATE
△		
△		
△		
△		
△		
△		
△		
△		
△		
△		
△		

PROJECT NO: Project Number
DATE ISSUED: Issue Date
SCALE: As indicated

E4.01

ELECTRICAL SPECIFICATIONS

tk1sc COLLABORATIVE
11870 Pierce Street, Suite 160
Riverside, California 92505
951.299.4160 www.tk1sc.com

Project Leader - Bill Voller
Electrical Lead - Nikolas Bruno
tk1sc Job #: B2203109.000

U. Fittings:

1. Condulet type fittings shall be smooth inside and out, taper threaded with integral insulating bushing and of the shapes, sizes and types required to facilitate installation or removal of wires and cables from the conduit and tubing system. These fittings shall be of metal, smooth inside and out, thoroughly galvanized, and sherardized cadmium plated.
2. Metallic condulet covers shall have the same finish as the fitting and shall be provided for the opening of each fitting where conductors do not pass through the cover.
3. Connector, coupling, locknut, bushings and caps used with rigid conduit shall be steel, threaded and thoroughly galvanized. Bushings shall be insulated.
4. UON all interior EMT fittings, connectors and couplings installed in concealed locations, areas not considered to be wet or damp locations by the AHJ, or areas not subject to physical damage, shall be steel, zinc or cadmium plated, threadless, compression, steel locking ring type with insulated throat. Where suitable for use, steel set screw fittings are allowed for trade sizes of 2" and smaller. Insulated throat is not required for fittings, connectors and couplings 1" and smaller.
5. All interior and exterior EMT fittings, connectors and couplings, 2" and smaller, installed in exposed or concealed locations that are considered by the AHJ to be wet or damp locations, shall be raintight-listed, steel, zinc or cadmium plated, threadless, compression, steel locking ring type with insulated throat. If raintight-listed, EMT fittings, connectors and couplings are unavailable for a given trade size or if conduit is installed in an area subject to damage – provide rigid metallic or intermediate metallic conduits, fittings, connectors and couplings as required.
6. Flexible steel conduit connectors shall be a malleable iron clamp or squeeze type or steel twist-in type with insulated throat. The finish shall be zinc or cadmium plating.
7. Conduit unions shall be "Erickson" couplings, or approved equal. The use of running threads will not be permitted.

V. 600V Conductors – Wire and Cable:

1. All conductors shall be copper. Provide stranded conductor for #10 AWG and larger or when making flexible connections to vibrating machinery. Use compression "fork" type connectors or transition to solid conductors when connecting to switches, receptacles, etc.
2. Type THHN/THWN-2 thermoplastic, 600V, UL approved, dry and wet locations rated at 90 degrees Celsius, for conductors of all sizes from #12 AWG up to and including 1000 kcmil. RHH/RHW insulation is allowed only to provide an Electrical Circuit Protective System to comply with NEC, or CEC where adopted, **Articles 695 and 700**.
3. Wire and cable shall be new, manufactured not more than six (6) months prior to installation, shall have size, type of insulation, voltage rating and manufacturer's name permanently marked on outer covering at regular intervals.
4. Wire and cable shall be factory color-coded by integral pigmentation with a separate color for each phase and neutral. Each system shall be color-coded and it shall be maintained throughout.
5. Systems Conductor Color Coding:
   a. Power 208/120V, 3PH, 4W:
      1) Phase A = Black
      2) Phase B = Red
      3) Phase C = Blue
      4) Neutral = White or White with Phase Color Tracer
      5) Switchlegs = Purple (Switchlegs shall also be identified separately by numerical tags)
      6) Travelers = Purple with Black stripe or Pink
   b. Power 480/277V, 3PH, 4W:
      1) Phase A = Brown
      2) Phase B = Orange
      3) Phase C = Yellow
      4) Neutral = Grey or Grey with Phase Color Tracer
      5) Switchlegs = Purple (Switchlegs shall also be identified separately by numerical tags).
      6) Travelers = Purple with Black stripe or Pink.
   c. Ground Conductors: Green
   d. Isolated Ground Conductors: Green with continuous Yellow stripe
   e. Fire Alarm System: As recommended by the manufacturer
6. All color-coding for #12 through #6 AWG conductor shall be as identified above. Conductors #4 AWG and larger shall be identified by utilizing phase tape at each termination.
7. No conductors carrying 120V or more shall be smaller than #12 AWG.
8. Aluminum conductors shall not be used.
9. Wire-pulling compounds used as lubricants in installing conductors in raceways shall only be "Polywater J". No oil, grease, graphite, or similar substances may be used. Pulling of #1/0 or larger conductors shall be done with an approved cable pull machine. Other methods; e.g. using vehicles or block and tackle to install conductors are not acceptable.

W. Medium Voltage Conductors (greater than 600V):

1. See drawings for Medium Voltage Cable Schedule and Specifications.

X. Junction and Pullboxes:

1. For interior dry locations, boxes shall be NEMA 1 galvanized one-piece drawn steel, knockout type, with removable, machine screw secured covers.
2. For outside, damp or surface locations, boxes shall be NEMA 3R heavy cast aluminum or cast iron with removable, gasketed, non-ferrous machine screw secured covers.
3. For in-grade applications, junction and pull boxes shall be pre-cast concrete or molded fiberglass manufactured by Christy, Brooks-Jensen, or Utility Vault Co. Fiberglass boxes shall:
   a. Be used only in landscape planter areas that are not subject to damage from lawnmowers, tractors and other machinery.
   b. Not be used in lawn or turf areas.
   c. Not exceed 11" W x 17" L in size unless required to be larger to meet code requirements.
4. All boxes shall be sized for the number and sizes of conductors and conduits entering the box and equipped with plaster rings where required.
5. All boxes located in traffic areas shall be traffic rated.

Y. Outlet Boxes:

1. For fixtures, boxes shall be galvanized, one-piece drawn steel, knockout type equipped with 3/8" fixture studs and plaster rings where required.
2. For convenience outlets, wall switches, or other devices, outlet boxes shall be galvanized one-piece drawn steel, knockout type 4" x 4" x 2-1/8" minimum size with plaster rings as required.
3. For locations where standard boxes are not suitable due to number and size of conduit to be terminated, special boxes shall be designed to fit space or meet other requirements and submitted for approval.
4. For exposure to weather, damp locations, or surface mounting, outlet boxes shall be heavy cast aluminum or cast iron with threaded hubs; covers shall be watertight with gaskets and non-ferrous screws.
5. Outlet boxes used for support of ceiling fans shall be galvanized, one-piece drawn steel, knockout type equipped with bracing bars and plaster rings where required and listed for ceiling fan support use. Such boxes shall be labeled and capable of supporting ceiling fan weights up to 70 pounds.
6. See drawings for floor box installation notes and specifications.

Z. Plywood Backboards: Where indicated for telephone or communications system terminals or other equipment assemblies, provide backboards of size indicated. Use 3/4" thick x 8' tall (length per plans), Douglas Fir, void-free, kiln-dried, fire-rated plywood finished on one side and prime coat painted on all surfaces with finish coat of enamel paint, color by architect. Leave one (1) fire-rating stamp/sheet exposed for inspection.

AA. Terminal Cabinets:

1. Terminal cabinets shall be fabricated of hot dipped galvanized code gauge sheet metal for flush or surface mounting, complete with barriered sections, a door for each vertically barriered section, and sizes as indicated on plan. Doors shall be hinged and lockable. Locks shall be keyed to match the branch circuit panelboards. Terminal cabinet trims shall match the branch circuit panels.
2. Provide each terminal cabinet with a full size mounting backplate.
3. Terminal cabinets shall be installed complete with full-length skirts of the same construction and finish as the terminal cabinet.
4. Where mounted outdoors, terminal cabinets shall be NEMA 3R, weatherproof complete with gaskets and required sealant to prevent moisture from entering the terminal cabinet.
5. All terminal cabinets and terminal cabinet barriered sections shall be labeled by the cabinet or cabinet section use (i.e. CATV, Security, etc.). Labels shall be Micarta type as specified elsewhere in these specifications. Unless otherwise noted, all termination blocks and cables shall be labeled per ANSI/EIA 606 standard.

BB. Painting: Terminal cabinets, panels, junction boxes, pull boxes, etc., and conduit installed in public view shall be painted with colors selected by the Architect to match the subject surface. Refer to painting section of the specifications for additional requirements.

CC. Seismic Design, Certification, and Anchoring of Electrical Equipment:

1. Contractor shall include all costs in the base bid for labor, materials, all special inspections and structural engineering design necessary to meet the Seismic Design Requirements for Non-structural Components **(Chapter 13, ASCE/SEI 7-16 Minimum Design loads for Buildings and Other Structures) as required by IBC, or CBC where adopted, Section 1617A** and as related to the installation of all electrical equipment furnished under this contract. See Specific Project Site Seismic Criteria on architectural and/or structural plans which include Building Occupancy Category, Seismic Design Category, Design Spectral Response Acceleration (S_{DS}), Height factor ratio (z/h) and Site Class. Non-structural Component Importance Factor (I_p) for a particular component shall be determined based on the following criteria:
   a. I_p=1.0: Non-life safety, Non-structural Components in an Occupancy Category IV Facility not required for continued operations of the facility or in any other Occupancy Category Facility where component failure will not impair continued operation of the facility.
   b. I_p=1.5: Designated Seismic Systems are those non-structural components in any Occupancy Category IV facility (except as noted above) or that are a part of any code-defined Critical, Life Safety, Emergency and Legally Required Standby Electrical System. Additionally, those non-structural components containing hazardous materials shall be classified as Designated Seismic Systems. While Designated Seismic Systems are generally identified on the plans, they may include items such as Generators, Automatic Transfer Switches, UPS units and all associated electrical distribution equipment and components necessary for the designated seismic system to form a complete and operable system. The Contractor shall ultimately be responsible for identifying Designated Seismic Systems. For any electrical component either identified on the plans or determined by the contractor to be a Designated Seismic System, all line and load side electrical distribution systems supporting that Designated Seismic System (including, but not limited to, feeders, panel boards switchboards, transformers, all related component supports and attachments, etc.) shall be considered a part of the designated seismic system for the purposes of code-compliance and seismic certification.
   c. z/h – Height factor ratio: See plans for respective equipment locations.
2. Provide a delegated-design submittal for each of the following seismic-restraint systems to be used as required:
   a. Restraint Channel Bracings consisting of MFMA-4, shop-or field-fabricated bracing assembly made of slotted steel channels with accessories for attachment to braced component at one end and to building structure at the other end, with other matching components, and with corrosion-resistant coating; rated in tension, compression, and torsion forces.
   b. Restraint Cables consisting of ASTM A 603 galvanized-steel cables. End connections made of steel assemblies with thimbles, brackets, swivel, and bolts designed for restraining cable service, with a minimum of two clamping bolts for cable engagement.
   c. Seismic-Restraint Accessories consisting of hanger rod/hanger rod stiffener assemblies, multifunctional steel connectors for attaching hangers to rigid channel bracings and/or restraint cables, bushings for floor and wall-mounted equipment, anchor bolts, and resilient isolation washers and bushings.
   d. Mechanical Anchor Bolts consisting of drilled-in and stud-wedge or female-wedge type in zinc-coated steel for interior applications and stainless steel for exterior applications. Select anchor bolts with strength required for anchor and as tested according to ASTM E 488.
   e. Adhesive Anchor Bolts consisting of drilled-in and capsule anchor system containing resin and accelerator, or injected polymer or hybrid mortar adhesive. Provide specific LEED-compatible, environmentally-friendly resins and adhesives on all LEED projects. Provide anchor bolts and hardware with zinc-coated steel for interior applications and stainless steel for exterior applications. Select anchor bolts with strength required for anchor and as tested according to ASTM E 488.
3. Submittal shall include design calculations and details for selecting seismic restraints complying with performance requirements, design criteria, and analysis data signed and sealed by the contractor's structural engineer responsible for their preparation. Calculations shall include, but not be limited to, static and dynamic loading caused by equipment weight, operation, and seismic and, if applicable, wind forces required to select seismic and, if applicable, wind restraints and for designing vibration isolation bases. Provide seismic and wind-restraint detailing to support system selection, arrangement of restraints, attachment locations, methods, and spacings with all components identified to include their strengths, directions and values of forces transmitted to the structure during seismic events and association with vibration isolation devices. Sizes of components shall be selected so strength will be adequate to carry present static and seismic loads to accommodate 25% spare future capacity within specified loading limits.
4. Any pre-approval and evaluation documentation shall have a California Office of Statewide Health Planning and Development (OSHPD) Special Seismic Certification Preapproval (OSP) demonstrating horizontal and vertical load testing and analysis showing maximum seismic-restraint ratings, by ICC-ES or another agency acceptable to authorities having jurisdiction. Ratings based on independent testing are preferred to ratings based on calculations. If preapproved ratings are not available, submittals based on independent testing are preferred. Calculations (including combining shear and tensile loads) that support seismic-restraint designs must be signed and sealed by a qualified professional engineer.
5. Coordinate the location of embedded connection hardware with supported equipment attachment and mounting points and with requirements for concrete reinforcement and formwork specified elsewhere in the project specifications.
6. Install flexible connections in runs of raceways, cables, wireways, cable trays, and busways where they cross seismic joints, where adjacent sections or branches are supported by different structural elements, and where connection is terminated to equipment that is anchored to a different structural element from the one supporting them as they approach equipment. Flexible connection limitations of the NEC, or CEC where adopted, shall apply.
7. Install seismic-restraint devices using methods approved by OSHPD or an agency acceptable to authorities having jurisdiction providing required submittals for component.
8. Multiple Raceways or Cables: Secure raceways and cables to trapeze member with clamps approved for application by OSHPD or an agency acceptable to authorities having jurisdiction.
9. The contractor shall engage a qualified testing agency to perform tests and inspections as listed in other Project Specifications, but as a minimum shall include at least four of each type and size of installed anchors and fasteners selected by Architect. Schedule tests with Owner, through Architect, before connecting anchorage device to restrained component (unless post connection testing has been approved), and with at least seven days' advance notice. Obtain Architect's approval before transmitting test loads to structure. Provide temporary load-spreading members as required. Test to 90 percent of rated proof load of device. Prepare and submit test and inspections reports.

DD. Trenching and Backfilling: Contractor shall be responsible for trenching and backfilling. Refer to applicable trenching and backfilling specifications for complete requirements.

PART 3 – EXECUTION

3.1 PREPARATION AND INSTALLATION

A. Installation of Conduit and Outlet Boxes:

1. All conduit installed in the dry walls or ceilings of a building shall be steel tube (EMT), aluminum tube (EMT), or intermediate Metal Conduit (IMC). Flexible conduit shall not be used in lieu of EMT, IMC or rigid conduit except as noted herein.
2. Galvanized rigid conduit (GRC) or intermediate metal conduit (IMC) shall be used as follows:
   a. When noted on the drawings.
   b. When considered exposed to damage by the local AHJ.
   c. When installed in wet or damp locations and of a trade size where listed-raintight fittings, connectors, couplings, etc. are unavailable.
   d. When required by NEC or CEC **Article 517.13**
   e. When installed in concrete and masonry. The use of ENT in CMU walls and parking structures may be allowed only as directed in writing by the Engineer. Request for ENT substitution must be made prior to bid and in accordance with pre-bid substitution request requirements of these specifications.
3. Intermediate metal conduit (IMC), is approved for use in all locations as approved for GRC or EMT and in accordance with NEC, or CEC where adopted, **Article 342**.
4. Flexible steel conduit shall only be permitted to be used at light fixture outlets and connections to vibrating electrical equipment. All flexible steel conduit runs shall be less than 6'-0". Except when concealed in walls or other structural elements, all outdoor installation shall be made using liquid-tight flex with approved fittings. Include a separate insulated green ground conductor sized per NEC in each conduit. Other uses of flexible conduit shall be allowed only as approved in writing by the Engineer.
5. Flexible liquid-tight conduit shall be installed in lieu of the flexible steel where required by NEC, or CEC where adopted, in damp and wet location, where exposed to weather, in refrigerated area (65 Deg. F or less), and/or between seismic joints. All rotating electrical equipment shall be supplied with flexible, liquid-tight conduit with appropriate slack and shall not exceed thirty-six (36) inches. Include a separate insulated green ground conductor sized per NEC in each conduit. Other uses of liquid-tight flexible conduit shall be allowed as approved in writing by the Engineer on a case by case basis.
6. Rigid metallic conduit installed underground or embedded in concrete shall be 1" trade size minimum and shall be wrapped with 20 mil polyvinyl chloride plastic tape. PVC conduit installed underground or imbedded in concrete shall be 3/4" minimum trade size.
7. Where required for providing an Electrical Circuit Protective System to comply with NEC, or CEC where adopted, **Articles 695 and 700**, utilize UL Listed 2-hour fire-rated, MC cable or UL Listed 2-hour fire-rated RHH/RHW conductors in conduit.
8. Conduit shall be run so as not to interfere with other piping, fixtures or equipment.
9. The ends of all conduits shall be cut square, carefully reamed out to full size and shall be shouldered in fitting.
10. No running threads will be permitted in locations exposed to the weather, in concrete or underground. Special union fittings shall be used in these locations.
11. Where conduit is underground, under slabs or grade, exposed to the weather, or in wet locations, make joints liquid tight and gas tight.
12. All metal conduit in masonry and concrete and where concealed under floor slabs shall have joints painted with thread compound prior to makeup.
13. PVC conduit shall not be run in walls except where approved by the Engineer prior to bid in limited instances that may include concrete or CMU walls used in site retaining, parking structures, or exterior equipment yard or enclosure walls, etc.
14. Where conductors enter a raceway or a raceway in a cabinet, pull box, junction box, or auxiliary gutter, the conductors shall be protected by a plastic bushing type fitting providing a smoothly rounded insulating surface.
15. Where conduit extends through roof to equipment on roof area, the Contractor shall provide flashing material compatible with the roofing system as required by the roofing specifications or as required by the Owner's roof warranty. This flashing shall be delivered to the roofing Contractor for installation. The actual location of all such roof penetrations and outlets shall be verified by the Architect/Owner. Contractor to verify type of flashing prior to bid and include all costs.
16. All conduit shall be supported at intervals not less than 6'-0" and within 12" from any outlet and at each side of bends and elbows. Conduit supports shall be galvanized, heavy stamped, two-hole conduit clamp properly secured.
17. Where conduit racks are used, the rack shall consist of two piece conduit clamps attached to galvanized steel slotted channels, properly secured via threaded rods attached directly to the building structure.
18. Nail-in conduit supports, one-piece set screw type conduit clamps or perforated iron for supporting conduit shall not be used.
19. Seismic Conduit Support:
   a. All conduit shall be supported in such a manner that it is securely attached to the structure of the building. Attachment is to be capable of supporting the tributary weight of conduit and contents in any direction. Maximum spacing of support and braces are to be as follows:

CONDUIT SIZE	MAXIMUM SPACING
1/2" to 3"	6'-0"
3-1/2" to 4"	8'-0"

20. All conduit runs shall be installed parallel or perpendicular to walls, structural members, or intersection of vertical planes and ceilings. Field made bends and offset shall be avoided where possible. Crushed or deformed raceway shall not be installed.
21. Open knockouts in outlet boxes only where required for inserting conduit.
22. Locate wall outlet of the same type at same level in all rooms, except where otherwise noted.
23. Outlet boxes on metal studs shall be attached to metal hangers, tack welded or screwed to studs; On wood studs attachment shall be with wood screws, nails are not acceptable.
24. Recessed boxes shall not be mounted back-to-back in any wall; minimum offset shall be 24 inches.
25. Junction Boxes that do not contain any device(s) shall be located in storage rooms, electrical closets or above accessible ceilings, not in hard lid ceilings or other forms of inaccessible ceilings. Place boxes which must be exposed to public view in a location approved by the Owner's Project Manager. Provide covers or plates to match adjacent surfaces as approved by the Owner's Project Manager.
26. Surface mounted pull boxes, terminal cabinets, junction boxes, panel boards etc., shall be attached to walls using appropriate screws, fasteners, backing plates, stud blocking, etc., as detailed on architectural and/or structural drawings. If architectural and/or structural drawings are not provided on the project, Contractor shall provide all necessary mounting hardware and backing support to comply with local building code requirements and any additional requirements imposed by the local Authority-Having-Jurisdiction.
27. Except where below grade, sleeves shall be installed where conduit passes through masonry or concrete walls and shall be 24 gauge galvanized steel no more than 1/2" greater in diameter than the outside diameter of the conduit. When located in non-rated structures, caulk conduit sleeve with stone wool. When located in fire rated structures, provide UL listed fire stopping system. See fire stopping section of this specification for additional requirements.
28. All boxes shall be covered with outlet box protector, Appleton SB-CK, or similar device/method to keep dirt/debris from entering box, conduit or panels. If dirt/debris does get in, it shall be removed prior to pulling wires.
29. All boxes installed outdoors shall be suitable for outdoor installations, gasketed, screw cover, and painted as directed by the Architect with weatherproof paint to match building.
30. All conduit entries to outdoor mounted panels, cabinets, boxes, etc., shall be made using Myers "SCRU-TITE" hubs Series ST.
31. Provide nylon or a 1/8-inch O.D. polyethylene rope, rated at 250 pounds tensile strength, in all conduits more than 5 feet in length left empty for future use. Not less than 5 feet of rope shall be left at each end of the conduit. Tag all lines with a plastic tag at each end indicating the termination/stub location of the opposite end of the conduit.
32. All multiple conduit runs within suspended ceilings shall be suspended from building structure by means of unistrut hangers/racks. Conduit shall not be allowed to lay on ceiling or be supported from ceiling suspension wires or other suspension system. Support conduit to structure above suspended ceilings 8" minimum above ceiling to allow removal of ceiling tile. Maintain two inch clearance above recessed light fixtures.
33. All exposed conduits and support hardware shall be painted to match the finish of the wall or ceiling to which it is supported.
34. Where conduits or wireways cross seismic joints, provide approved flexible conduit connection or approved expansion/deflection fitting to allow for displacement of conduit in all three axes. Connection shall allow for movement in accordance with design of seismic joint. Non-flexible raceways crossing expansion joints or other areas of possible structural movement shall make provision for 3-way movement at such points by means of expansion/deflection fittings. Fittings shall be installed in the center of their axes of movement and shall not be deflected to make part of a conduit bend, or compressed or extended to compensate for incorrect conduit length. Install flexible conduit connection(s) or approved expansion/deflection fitting(s) complete with ground jumpers. Where necessary, provide approved expansion joints to allow for thermal expansion and contraction of conduit(s). Install expansion joints complete with ground jumpers.
35. Seal all conduits where termination is subject to moisture or where conduit penetrates exterior wall, floor or roof, in refrigerated areas, classified (hazardous areas) and as indicated on the drawings.
36. Except as otherwise indicated on the drawings or elsewhere in these specifications, bends in feeder and branch circuit conduit 2 inches or larger shall have a radius or curvature of the inner edge, equal to not less than ten (10) times the internal diameter of the conduit. Except where sweeping vertically into a building where sweep radius equals ten (10) times conduit diameter, underground communications and building interconnect conduits 3 inches or larger shall have a minimum 12'-6" radius or curvature of the inner edge. For the serving utilities, radius bends shall be made per their respective specifications.
37. Tag all empty conduits at each accessible end with a permanent tag identifying the purpose of the conduit, footage end-to-end, and the location of the other end. In wet, corrosive outdoor or underground locations, use brass, bronze, or copper 16 gauge tags secured to conduit ends with #16 or larger galvanized wire. Inscribe on the tags, with steel punch dies, clear and complete identifying information.
38. The following additional requirements shall apply to underground conduits:
   a. Underground conduit shall be Schedule 40 PVC (polyvinyl chloride) unless otherwise indicated elsewhere in these specifications or as required per NEC, or CEC where adopted, **Article 517.13**.
   b. For all communications conduits 2" and larger, and feeders 100A or greater, provide with a minimum 3", (2,000 LB) concrete envelope, 2" minimum separation between conduits, installed at depth of not less than 24" below grade. (Provide concrete encasement and/or greater minimum conduit depth as required by the Utility Companies.) Conduit separation within a duct bank shall be maintained using plastic spacers located at 5'-0" intervals. Where power and communication conduits are run in a common trench, a 12" minimum separation shall be maintained between power and communication conduits or as required by Utility Companies. Where concrete encasement is not required by serving utlities for a utility-only duct bank, provide free draining sand bedding suitable to acheive 95% relative compaction based on ASTM D1557 using 6" lifts or directed by Utility Company Standards.
   c. In all cases, where any conduit(s) pass under a building slab or footing, the electrical contractor will provide a Bentonite clay or concrete barrier that conforms to the height and width of the trench excavation extending a minimum of 24" on either side of the foundation. In all cases, where conduit(s) pass through a sleeve in a footing or other foundation element, the electrical contractor will provide a Bentonite clay or concrete barrier between the sleeve and the conduit(s) surrounding the conduit(s) for the entire depth of the sleeve. The barrier is required to prevent passage of moisture under or through the slab or footing via the trench or sleeve.
   d. Where underground conduit passes under a building slab, concrete encasement may not be required, except as required above, contact the Engineer for written direction prior to omitting any encasement.
   e. Underground conduits, which terminate inside building(s) below grade, such as in a basement level, or which slope so that water might flow into interior building spaces, shall be sealed at the point of penetration with a modular conduit seal (Link-Seal or equal by Rox Systems). Conduit/conduit sealing system penetrations of waterproofing membranes/systems on existing structures shall be completely restored as required to maintain membrane/system manufacturer and installer warrantee for the installation. All conduits shall be provided with a 4% slope away from buildings. All conduits shall be installed such that the water cannot accumulate in the conduit and such that water drains into the nearest manhole, pull box or vault and not into the facility. In instances where grade changes or elevation differences prevent sloping of conduit away from a building into the nearest manhole, pull box or vault or where accumulation of water in a manhole, pull box or vault may result in water traveling into the facility, conduits shall be sealed internally at each end of each conduit using conduit sealing bushing, sized as required for the conductors contained within the conduit (O-Z Gedney #CSBG 100psig withstand or equal). In all cases, install plugs or caps in spare (empty) conduits at both ends of each conduit (Jackmoon or equal) preventing both water and gas from entering the facility via the conduits.
   f. Include a separate insulated green ground conductor sized per NEC, or CEC where adopted, in each underground electrical feeder/branch circuit.
   g. All underground conduits with circuits rated at 40A or greater and all underground communications conduits shall be provided with a metallic marker tape located 12" below the finished grade.
   h. Where underground conduits sweep into/through slabs, utilize PVC 90 degree sweeps that transition, via female PVC adapter to GRC coupling mounted flush in slab. GRC couplings shall be 1/2 lap taped with 20 mil tape. If the distance of the conduit run between a sweep and the next connecting sweep, pullbox, vault or manhole exceeds 150 ft then the sweep shall be concrete encased. Exceptions:
      1) Communications conduits shown terminating at a finished floor shall have an additional 4" high GRC nipple equipped with a bushing, removable conduit plug, labeling tag and pull rope. Tie off pull rope to conduit plug.
      2) Utility conduit sweeps shall be installed per the requirements of the respective utility company.
   i. All PVC conduit shall be glued for a water and gas tight installation. The Contractor shall use appropriate solvent on all joints prior to gluing conduit and fittings together.
   j. All underground conduit work shall conform to the Federal, State and Local Safety Orders or Rules regarding excavations, trenches and related earthwork. For projects in California, refer to the **California Code of Regulations, Title 8, Construction Code Sections 1540 and 1541** for additional requirements.
39. Installation of Metal Clad (MC) Cable (when use is permitted in the Allowed Specification Deviations Section or Deductive/Additive Alternate Pricing Section generally located on the symbols list drawing).
   a. Provide J-box above accessible ceiling prior to running MC cable within partitions or walls. J-box shall be permanently labeled with panel identification and circuit numbers contained within.
   b. Overhead MC cable runs shall generally follow building lines to provide a neat and workmanlike installation.
   c. Provide code-sized J-boxes to accommodate MC cable splicing in general. For systems furniture poke-through feeds utilizing MC cable, transition from MC cables to conduit and wire near the panelboard in the TI accessible ceiling space on the floor below the panel board via code-sized gutter(s). Utilize UL listed, insulated barrier strips with recessed screw heads (Ideal #89-6?? series or equal) fastened within the gutter(s), terminate MC conductors on one side of the strip(s) and individual conductors in conduit from the panel board(s) on the other side of the strip(s). Label each terminal strip(s) with panel designation. Label each phase conductor with circuit number using wire markers (ideal or equal). Wire nuts are not an acceptable alternative to the terminal strips in these underfloor transition locations. Provide (1) spare 3/4" conduit from each gutter to its respective panelboard.
   d. MC cable shall not run directly into panelboards, distribution boards or electrical rooms.
   e. MC cabling shall be provided with its own code-approved ceiling support wires, cable hangers, individual spring steel support clips, steel trapeze hangers, threaded rods or dedicated #10 AWG drop wire. Cable supports shall be fastened to concrete slabs, beams, joists or other structural members of the building. In no case shall MC cable rest on ceilings, suspended ceilings or structures. Do not support MC cable using ceiling support wires. The use of nylon cable ties to support MC cable is not allowed.
   f. Use lock or spring nut MC cable fittings.
   g. Cable runs shall be continuous from wiring device to wiring device – no intermediate splicing J-boxes allowed.
   h. When terminating or splicing at a junction, outlet, or switch box, cut the cable with an armored cable rotary cutter such that 6" of free conductors remain for connections or splices. Use screw-in or spring lock connector and ensure a proper bonding by firmly tightening the connector to both the box and cable. Insert an anti-short bushing at cable ends to protect conductors from abrasion and use insulated connectors.
   i. MC Cable bend radius shall not be less than seven (7) times the external diameter of the cable.
   j. MC cables passing through fire-rated walls or floors shall be firestopped as required with a UL listed system. See firestopping requirements outlined elsewhere in this specification for additional requirements.
   k. Installation shall not exceed code requirements for total current carrying conductors in multiple MC cable runs bundled together into a single MC cable hanger or strap, unless support device is specifically listed for such purpose. Neutrals shall be counted as current carrying conductors.
   l. Maintain MC cable clearance of at least 6" from hot water and any other high temperature pipes. Maintain at least 12" clearance between MC cable(s) and telecommunication conduits and cables. MC cable shall cross telecommunication cables and conduits at right angles.
   m. MC cabling shall not be run through exposed ceilings, where open grid conditions exist, exposed on walls, or exposed to view. See Power Plan and Lighting Plan General Notes for additional requirements.
   n. Use of MC-AP, "MC All Purpose" or MC cabling where the interlocked armor sheath forms all or a portion of the equipment grounding conductor is expressly prohibited.
40. Installation of Electrical Nonmetallic Tubing (ENT) Cable (when use is permitted in the Allowed Specification Deviations Section or Deductive/Additive Alternate Pricing Section generally located on the symbols list drawing).
   a. When approved for use in the Allowed Specification Deviations Section or Deductive/Additive Alternate Pricing Section, generally located on the symbols list drawing, 1/2" and 3/4" trade size ENT shall be allowed for concealed lighting branch circuits, receptacle branch circuits and miscellaneous signal system circuits within concrete floors, walls and columns within parking structures.
   b. ENT conduit shall meet the requirements of Underwriters Laboratories **Standards 1479 and 1653, NEMA TC-13**, and be UL-listed.
   c. All ENT conduit, ENT fittings, ENT boxes and ENT accessories shall be UL listed and manufactured by the same manufacturer so as to form a complete ENT system. ENT systems shall only be used if they are listed for use in fire resistance rated concrete floors and ceilings with resistance ratings as indicated elsewhere in the project plans. ENT System shall comply with NEC, or CEC where adopted, **Article 362**.
   d. All ENT fittings and ENT boxes shall be concrete-tight listed without the use of tape. Additionally, ENT fittings shall be constructed of high-impact PVC and able to resist ENT conduit pull out forces of a minimum of 175 lbs. ENT fittings with fewer than 6 locking tabs for ENT connection shall utilize manufacturer-approved glue as additional protection from fitting/conduit separation. ENT conduit to rigid conduit transition fittings shall be equipped with set screw fittings on the rigid conduit side of the fitting. ENT to metal box fittings shall be equipped with a threaded end and lock washer.
   e. Where tubing enters a box, fitting or other enclosure provide a bushing or adapter to protect conductors from abrasion unless the box, fitting, or enclosure design provides equivalent protection.
   f. ENT junction boxes shall have brass screw inserts and shall be rated to support lighting fixtures weighing less than 50 lbs.
   g. Concrete tight metal boxes shall be used to support pendant hung fixtures or fixtures over 50 lbs.
   h. ENT shall be provided in continuous lengths between junction boxes without use of in-line splices or connectors and shall be clearly marked/labeled at least every 10-feet.
   i. All ENT conduit containing electrical branch circuits shall contain a code-sized equipment ground conductor.
   j. ENT shall transition to EMT, IMC, RMC, or rigid PVC, as appropriate or as called out elsewhere in this specification, for all exposed conduits within/on/under a parking structure.
   k. ENT shall transition to appropriately sized PVC expansion joint(s) at all structure expansion or seismic joints.
   l. ENT shall be securely fastened and supported every 2 – 3 ft. and within 1 ft. of every junction box and fitting to prevent movement and sag.
   m. ENT shall be routed straight without sags, or excessive bending. Where bends are required, comply with **Table 362.24** of the NEC for minimum radius of bends. Number of bends shall not exceed quantity allowed by code where used for power and lighting branch circuit and/or feeder conductors. Where utilized for communications system conductors (phones, data cabling, etc.) number of bends shall not exceed the equivalent of (2) 90 degree bends with conduit length no more than 100 feet without installation of a TIA 569-compliant pull box.
   n. Separation of ENT from fitting(s), excessive sags or deflections in ENT runs that prevent pulling of wire, and other ENT system product or system installation failures/errors, shall be corrected by saw cutting and patching as necessary at no additional cost to the Owner. Use of surface mounted conduits and junction boxes as a repair method is unacceptable.
   o. Empty ENT runs shall be provided with a nylon pull string.
   p. Coordinate installation of raceway with structural steel and other structural members. Do not cut, notch or otherwise alter structural members without obtaining approval in writing from the Structural Engineer of Record.
   q. No more than (2) 3/4" ENT conduits may cross each other within a horizontal concrete slab without obtaining approval in writing from the Structural Engineer of Record.

B. Installation of 600V Conductors:

1. All electrical wire, including signal circuits, shall be installed in conduit.
2. All circuits and feeder wires for all systems shall be continuous from overcurrent protective device or switch to terminal or farthest outlet. No joints shall be made except in pull, junction or outlet boxes, or in panel or switchboard gutters.
   a. Utilize pre-insulated "winged" spring type connectors, 3M Company "Performance Plus" #O/B or #R/Y or equal and as required for splices and taps in conductors #6 AWG and smaller. When a spring connector is used in an underground environment or when subject to moisture, utilize a 3M Company Scotchcast 3507G epoxy resin connector sealing pack to seal the spring connector. THE USE OF PUSH-WIRE CONNECTORS (e.g. "WAGO" OR EQUIVALENT) IS STRICTLY PROHIBITED.
   b. Wires #4 AWG and larger AWG shall be joined together as follows:
      1) When located in an underground environment or when subject to moisture, the splice shall be made with compression connector and sealed by a 3M, or equal, PST cold shrink connector insulator.
      2) When located in an interior environment, the splice shall be made with an ILSCO or equal dual rated, insulated splicer-reducer connector or multi-tap connector listed for use with 75/90 degree Celsius rated conductors.
   c. Connections to busbar shall be made with dual-rated copper/aluminum one-piece compression lugs. Paralleled conductor connections shall be by mechanical lugs.
3. Thoroughly clean all conduit and wire-ways and see that all parts are perfectly dry before pulling any wires.
4. Install UL approved fixture wire from all lighting fixture lamp sockets into fixture outlet or junction box.
5. For 20A branch circuit wiring, increase #12 conductors to #10 for 120V circuits longer than 100 feet and for 277V circuits longer than 150 feet.
6. Conductor Support: Provide conductor supports as required by codes and recommended by cable manufacturer. Where required, provide cable supports in vertical conduits and provide lower end of conduit with a ventilator.

C. Grounding/Bonding:

1. Provide grounding and bonding for entire electric installation as shown on plans, as listed herein, and as required by applicable codes. Included, but not limited to, are items that require grounding/bonding:
   a. Conduit, raceways and cable trays.
   b. Neutral or identified conductors of interior wiring system.
   c. Panel boards, Distribution boards, Switchgear and Switchboards.
   d. Non-current carrying metal parts of fixed equipment.
   e. Telephone distribution equipment.
   f. Transformers, Inverters, UPS, PDU, RDC, Transfer Switch and Generator Systems.
   g. Raised Flooring.
   h. Exposed metal in maintenance holes, hand holes.
   i. Lightning Protection Systems and antennas.
   j. Metal piping installed in or attached to a building/structure.
   k. Metallically isolated structural steel.
   l. Metallically isolated underground metal water piping.
   m. Elevator hydraulic piston/lift case.
2. In multi-occupancy buildings, Contractor shall bond metal water piping systems installed in, under or attached to a building and/or structure serving individual occupancies where the piping system(s) are metallically isolated from each other. Per NEC, or CEC where adopted, **ART. 250.104(A)(2) and (3)**, the bonding conductor shall be sized per **Table 250.122** and connected to the switchboard/panelboard serving that suite/occupancy.
3. Use of Ground Rods: Furnish and install required number of 3/4" x 10' copper clad ground rods to meet specified resistance, all required grounding wires, conduit and clamps. The size of the grounding conductors shall be not less than that set forth in the latest edition of the California Code of Regulations, Title 24, State of California and NEC (or CEC where adopted), unless otherwise indicated. Rods shall be installed such that at least 10 feet of length is in contact with the soil. Where rock bottom is encountered, the electrode shall be driven at an oblique angle not to exceed 45 degrees from vertical or shall be buried in a trench that is at least 30 inches deep. The upper end of the electrode shall be flush with or below ground level unless the above ground end and the grounding electrode conductor attachments are protected against physical damage. Unless otherwise noted, connection to the grounding electrode conductor may be by compression type or exothermic process connector. Mechanical connectors shall not be used.
4. Grounding System Connection:
   a. Compression connectors shall be unplated copper, manufactured by Burndy, or approved equal, designed specifically for the intended connection.
   b. Exothermic weld-type connectors shall be 'Cadweld' manufactured by Erico Products, or approved equal, designed specifically for the intended connection.
   c. Mechanical connectors shall not be used.
5. Isolated Ground Receptacles shall have an insulated ground wire connected between the receptacle and the panelboard isolated ground bus. Unless otherwise noted, this ground wire shall not be grounded at any other point, and shall be distinguished from other ground wires by a continuous yellow stripe.
6. Provide separate green equipment ground conductor in all electrical raceways to effectively ground all fixtures, panels, controls, motors, disconnect switches, exterior lighting standards, and non current-carrying metallic enclosures. Use bonding jumpers, grounding bushings, lugs, busses, etc., for this purpose. Connect the equipment ground to the building system ground. Use the same size equipment ground conductors as phase conductors, up through #10 AWG. Use NEC (or CEC where adopted) **Table 250.122** for conductor size with phase conductors #8 and larger, if not shown on the Drawings.
7. Clean the contact surfaces of all ground connections prior to making connections.
8. Ductwork: Provide a flexible ground strap, No. 6 AWG equivalent, at each flexible duct connection at each air handler, exhaust fan, and supply fan, and install to preclude vibration.
9. Motors: Connect the ground conductor to the conduit with an approved grounding bushing, and to the metal frame with a bolted solderless lug. Bolts, screws and washers shall be bronze or cadmium plated steel.
10. Building grounding system resistance to ground shall not exceed 25 ohms unless otherwise noted and should be confirmed by testing.

D. Line Voltage and Low Voltage Power Supplies to all Mechanical Equipment Including Plumbing, Heating and Air Conditioning Units:

1. An electric power supply, including conduit, any necessary junction and/or outlet boxes and conductors and connection shall be furnished and installed by the Contractor for each item or mechanical equipment.
2. Power supplies to individual items of equipment shall be terminated in a suitable outlet or junction box adjacent to the respective item of equipment, or a junction box provided by the manufacturer or the equipment and directed by the Mechanical Contractor. Allow sufficient lengths of conductor at each location to permit connection to the individual equipment without breaking the wire run.
3. The location of all conduit terminations to the equipment is approximate. The exact location of these conduit terminations shall be located and installed as directed by the Mechanical or Plumbing Contractor.
4. Provide power supplies to all plumbing and mechanical equipment, including, but not limited to, equipment furnished and installed by Owner or Contractor, such as heating and air conditioning equipment, pumps, boilers, auto valves and water coolers, etc. The installation shall produce a complete and operable system.
5. Unless otherwise noted, the Contractor shall furnish and install all conduit, boxes, wires, etc., for line voltage wiring and low voltage wiring.
6. It is the Contractor's responsibility to verify with the drawings of other trades regarding the extent of his responsibility for mechanical equipment. The bid must include a sum sufficient to cover the cost of the installation.
7. The location of all power supply connection and/or terminations to the mechanical equipment is approximate. The exact locations of these terminations shall be verified with other trades during construction.

E. Prefabricated Equipment: Installation of all prefabricated items and equipment shall conform to the requirements of the manufacturer's specifications and installation instruction pamphlets. Where code requirements affect installation of materials and equipment, the more stringent requirements, code or manufacturer's instructions and/or specifications, shall govern the work.

F. Firestopping:

1. The Contractor shall be responsible for furnishing all material, labor, equipment, and services in conjunction with the selection and installation of a complete, fully functioning, code compliant, UL-listed, fire stop assembly/system(s) as required by project conditions.
2. Each fire stop assembly/system shall have an "F" and/or "T" rating as required by each condition requiring fire stopping. Each fire stop assembly/system shall have a current UL listing, as indicated in the latest edition of the UL Fire Resistance Directory. Contractor shall verify acceptability of all fire stopping methods and system selections with the authority having jurisdiction prior to installation. The Contractor shall install each firestop assembly/system in accordance with the manufacturer's printed instructions
3. Each fire stop assembly/system shall be labeled with fire stop manufacturer-furnished label on each side of the fire stopping systems depicting UL number, etc.

G. House Keeping Pads:

1. Provide a minimum 3" high housekeeping pad above finished floor/finished grade for all floor-mounted switchgear, switchboards, distribution boards, transformers, motor control centers, etc., flush with the face of the equipment. Located in mechanical central plant(s), other mechanical spaces, and located outdoors, pads shall be flush with the face of the equipment. Confirm pad dimensions with local inspector prior to forming pad to ensure any local code interpretations/conditions are met regarding housekeeping pads.
2. Unless otherwise noted above, provide a minimum 1-1/2" high housekeeping pad above finished floor/finished grade for all interior floor-mounted switchgear, distribution boards, transformers, motor control centers, transfer switches, etc., flush with the face of the equipment. All housekeeping pad heights are as measured from finished floor or grade. Confirm pad dimensions with local inspector prior to forming pad to ensure any local code interpretations/conditions are met regarding housekeeping pads.
3. Provide a 1-1/2" high housekeeping pad above finished floor/finished for service equipment. Prior to pad rough-in, Contractor shall verify serving utility company's maximum meter height requirements and, if necessary, adjust height of housekeeping pad to comply with those requirements. In indoor applications, the pad shall be flush with the face of the switchgear. In outdoor applications, the housekeeping pad shall extend a minimum of 4 feet from the front of switchgear's weatherproof enclosure. Confirm pad dimensions with local inspector prior to forming pad to ensure any local code interpretations/conditions are met regarding housekeeping pads.
4. All housekeeping pads located in, on, or attached to a building shall be seismically braced/connected to the building structure.

END OF SECTION

IDENTIFICATION STAMP
DIV. OF THE STATE ARCHITECT
APP: 01-120592 INC:
REVIEWED FOR
SS ☑ FLS ☑ ACS ☑
DATE: 7/11/2023

OWNER: San Rafael City Schools

PROJECT NAME: Venetia Valley School Middle School Restroom Addition

CLIENT ADDRESS: Enter address here

REGISTERED PROFESSIONAL ENGINEER
RAYMOND W. SWARTZ
No. E15610
Ex. 12/31/2023
ELECTRICAL
STATE OF CALIFORNIA

REVISIONS:

	DESCRIPTION	DATE
△		
△		
△		
△		
△		
△		
△		
△		
△		
△		
△		

PROJECT NO: Project Number
DATE ISSUED: Issue Date
SCALE: As indicated

E4.02

ELECTRICAL SPECIFICATIONS

tk1sc COLLABORATIVE
11870 Pierce Street, Suite 160
Riverside, California 92505
951.299.4160 www.tk1sc.com

Project Leader - Bill Voller
Electrical Lead - Nikolas Bruno
tk1sc Job #: B2203109.000

FIRE ALARM NOTES

1. WALL MOUNTED, AUDIBLE NOTIFICATION DEVICES SHALL HAVE THEIR TOPS MOUNTED AT 90" MINIMUM AND 100" MAXIMUM ABOVE THE FINISHED FLOOR, AND NO CLOSER THAN 6" TO A HORIZONTAL STRUCTURE. (NFPA 72, SECTION 18.4.8.1). ALL WALL MOUNTED VISUAL APPLIANCES AND COMBINATION AUDIBLE/VISUAL APPLIANCES SHALL HAVE THEIR BOTTOMS MOUNTED AT 80" MINIMUM AND 96" MAXIMUM ABOVE FINISHED FLOOR AS MEASURED TO THE LENS. (NFPA 72, SECTION 18.5.5.1)
2. ALL EQUIPMENT SHALL BE U.L. AND C.S.F.M. LISTED.
3. ALL FIRE ALARM WIRING SHALL BE FLP (FIRE POWER LIMITED) OR FPLP (FIRE POWER LIMITED PLENUM) AS REQUIRED FOR APPLICATION. WIRING IN CONDUIT ABOVE GROUND MAY BE THHN OR THWN.
4. PER THE CEC, ALL WIRING IS TO BE PULLED THROUGH EACH JUNCTION BOX AND CONNECTED DIRECTLY TO EACH FIRE DEVICE. DO NOT SPLICE THE WIRE. THERE MUST BE AT LEAST 6' OF LEAD WIRE FROM THE BOX TO THE DEVICE. ALL BOXES TO BE SIZED PER CEC AND SHALL HAVE THEIR COVERS PAINTED RED WHERE APPLICABLE.
5. DO NOT DEVIATE FROM CONDUIT RUNS AS SHOWN ON FLOOR PLANS WITHOUT PRIOR APPROVAL FROM ELECTRICAL ENGINEER. FACTORS SUCH AS EXCESSIVE VOLTAGE DROP, ADDITIONAL PARTS, ENGINEERING, ETC., THAT ARE A RESULT OF CONDUIT RUN DEVIATIONS SHALL BE THE SOLE RESPONSIBILITY OF THE ELECTRICAL CONTRACTOR.
6. ALL FAN SHUTDOWN FUNCTIONS, DAMPER CLOSURES AND ASSOCIATED MECHANICAL SYSTEM FIRE ALARM INTERFACE SHALL BE BY MECHANICAL CONTRACTOR, AND SHALL BE COORDINATED WITH FIRE ALARM SYSTEM.
7. ALL DUCT SMOKE DETECTORS SHALL BE MOUNTED BY THE MECHANICAL CONTRACTOR. DUCT SMOKE DETECTORS EXPOSED TO THE WEATHER SHALL BE C.S.F.M. LISTED FOR OUTDOOR INSTALLATION, AND WEATHER PROTECTED BY THE MECHANICAL CONTRACTOR. ALL AIR VELOCITY TESTING SHALL BE PERFORMED BY THE MECHANICAL CONTRACTOR.
8. ALL FIRE ALARM DEVICE BACKBOXES, FIRE ALARM TERMINAL CABINETS, GUTTERS, JUNCTION BOXES AND ASSOCIATED CONDUITS SHALL BE FURNISHED AND INSTALLED BY ELECTRICAL CONTRACTOR UNLESS OTHERWISE NOTED. REFER TO FIRE ALARM SYMBOL LIST AND/OR MOUNTING DETAILS FOR ADDITIONAL INFORMATION. SYSTEM SUPPLIER PROVIDED BACKBOXES SHALL BE INSTALLED BY ELECTRICAL CONTRACTOR UNLESS OTHERWISE NOTED.
9. SMOKE DETECTOR TESTING SHALL BE PERFORMED TO ENSURE THAT EACH DETECTOR IS WITHIN ITS LISTED AND MARKED SENSITIVITY RANGE USING THE METHODS RECOMMENDED PER CFC, SECTION 907.8.4 AND NFPA 72, SECTION 14.4.4.3.4.
10. ALL WIRING, INITIATING DEVICES AND ANNUNCIATOR PANEL SHALL BE SUPERVISED TO THE PRINCIPAL POINT OF ANNUNCIATION. THE FIRE ALARM CONTROL PANEL TO SUPERVISE THE ANNUNCIATOR PANEL, ALL INITIATING AND INDICATING DEVICE CIRCUITS.
    A. INITIATING DEVICE CIRCUITS (IDC): CLASS B
    B. SIGNALING LINE CIRCUITS (SLC): CLASS B
    C. NOTIFICATION APPLIANCE CIRCUITS (NAC): CLASS B
11. ALL WIRING SHALL BE CUT FOR IN AND OUT. WIRING SHALL NOT BE LOOPED THROUGH DEVICES.
12. POINT AND COMMON ANNUNCIATION AND T–TAPPING ARE PROHIBITED. (T–TAPPING IS ALLOWABLE ON SLC LOOPS).
13. PROVIDE 3/4" CONDUIT FROM FIRE ALARM CONTROL PANEL TO TELEPHONE BACKBOARD FOR OWNER PROVIDED CENTRAL STATION MONITORING, WHEN APPLICABLE.
14. CONTRACTOR TO FIELD VERIFY AND PROVIDE DECIBEL METER FOR TESTING OF AMBIENT NOISE LEVELS AUDIBLE DEVICES TO BE AT LEAST 15 DBA ABOVE THE AVERAGE AMBIENT SOUND LEVEL BUT NOT LESS THAN 75 DBA AT 10 FEET OR 5 DBA ABOVE THE MAXIMUM SOUND LEVEL BUT NOT MORE THAN 110 DBA AT THE MINIMUM HEARING DISTANCE. SOUND LEVEL SHALL BE MAINTAINED FOR DURATION OF AT LEAST 60 SECONDS. (CFC, SECTION 907.5.2.1.1) THE CONTRACTOR SHALL ADJUST/INSTALL ALL DEVICES TO MAXIMIZE PERFORMANCE AND TO MINIMIZE FALSE ALARMS. PROVIDE UPDATED PLANS AND CALCULATIONS THROUGH THE "CHANGE ORDER" PROCESS WHEN INSTALLING ADDITIONAL DEVICES.
15. VISUAL DEVICES SHOULD NOT EXCEED 2 FLASHES PER SECOND AND SHOULD NOT BE SLOWER THAN 1 FLASH EVERY SECOND. THE DEVICE SHALL HAVE A PULSING LIGHT SOURCE NOT LESS THAN 15–CANDELA. VISUAL DEVICES WITHIN 55' FROM EACH OTHER SHALL BE SYNCHRONIZED.
16. ALL FIRE ALARM CIRCUITS SHALL BE IN CONDUIT, APPROVED SURFACE RACEWAY OR OPEN RUN ABOVE CEILINGS, UNDER FLOORS AND IN WALLS IN A NEAT AND PROTECTED MANNER AS INDICATED ON THE DESIGN DOCUMENTS. EXPOSED CIRCUITS ARE ONLY PERMITTED WHEN NOTED AS EXPOSED ON DESIGN DOCUMENTS. ALL CONDUITS SHALL BE 3/4" MINIMUM. CONTRACTOR TO VERIFY CONDUIT FILL PRIOR TO INSTALLATION.
17. ALL FLOW SWITCHES SHALL BE 2 WIRE WITH NON–ELECTRONIC RETARD TYPE SIMILAR TO THE SYSTEM SENSOR MODEL "WFD SERIES" ONLY.
18. ALL DEVICES IN THE ALARM SYSTEM SHALL BE COMPATIBLE AND INSTALLED PER MANUFACTURER'S SPECIFICATIONS.
19. SYSTEM SHALL BE FURNISHED AND INSTALLED BY AN AUTHORIZED DISTRIBUTOR.
20. FIRE ALARM SYSTEM INSTALLATION COMPANY SHALL BE UL LISTED (UUJS).
21. FIRE ALARM PANEL, REMOTES, AND COMPONENTS SHALL BE SECURED TO MOUNTING SURFACES PER MANUFACTURER'S SPECIFICATIONS. NO SINGLE DEVICE SHALL EXCEED THE WEIGHT OF 20 LBS. WITHOUT SPECIAL MOUNTING DETAILS.
22. SMOKE DETECTOR SHALL NOT BE ANY CLOSER THAN 1 FOOT FROM FIRE SPRINKLERS OR 3 FEET FROM ANY SUPPLY DIFFUSER. IN THE AREA OF CONSTRUCTION OR WHERE POSSIBLE DAMAGE/CONTANMINATION COULD OCCUR ON NEWLY INSTALLED FIRE ALARM DEVICES, DEVICES SHALL BE COVERED UNTIL THAT AREA IS READY TO BE TURNED OVER TO THE OWNER. DETECTORS THAT HAVE BEEN INSTALLED PRIOR TO FINAL CLEAN–UP BY ALL TRADES SHALL BE CLEANED OR REPLACED IN ACCORDANCE WITH CFC, SECTION 907. CLEANING OR REPLACEMENT OF DEVICES THAT WERE MOUNTED AT THE REQUEST OF THE CONTRACTOR WILL NOT BE PERFORMED WITHOUT WRITTEN AUTHORIZATION THAT ASSUMES FINANCIAL RESPONSIBILITY FOR COSTS INCURRED. TESTING OF DETECTORS SHALL BE PERFORMED PER NFPA 72, SECTION 14.4.5.3 AND CFC, SECTION 907.8.4.
23. PER CBC, SECTION 11B–309 ACTIVATION OF INITIATING DEVICE SHALL NOT REQUIRE MORE THAN 5 LBS. (22.2N) OF FORCE OR REQUIRE TIGHT GRASPING PINCHING, OR TWISTING OF WRIST.
24. THE SYSTEM SHALL CONFORM TO CALIFORNIA CODE OF REGULATIONS (CCR) TITLES 19 AND 24 AS APPLICABLE TO THIS PROJECT.
25. THE VOICE/ALARM COMMUNICATION SYSTEM VOICE MESSAGE SHALL COMPLY WITH NFPA 72, SECTIONS 18.4 AND 24.4 FOR GENERAL REQUIREMENTS, INTELLIGIBILITY, AUDIBILITY, MESSAGE PRIORITY, TONES, ETC.
26. A DEDICATED 120V BRANCH CIRCUIT SHALL BE PROVIDED FOR FIRE ALARM EQUIPMENT, THIS CIRCUIT SHALL BE ENERGIZED FROM THE COMMON USE AREA PANEL AND SHALL HAVE NO OTHER OUTLETS. THE BREAKER SHALL HAVE A RED LOCKING DEVICE TO BLOCK THE HANDLE IN THE "ON" POSITION AND BE LABELED AS FOLLOWS:
    A. "FIRE ALARM" FOR FIRE ALARM SYSTEMS
    B. "EMERGENCY COMMUNICATIONS" FOR EMERGENCY COMMUNICATION SYSTEMS, OR
    C. "FIRE ALARM/ECS" FOR COMBINATION FIRE ALARM AND COMMUNICATIONS SYSTEMS.
27. WHERE A DETECTOR IS INSTALLED ABOVE THE CEILING, THE DETECTOR SHALL BE EASILY ACCESSIBLE AND THE LOCATION OF THE DETECTOR SHALL BE CLEARLY MARKED. FOR DUCT SMOKE DETECTORS A REMOTE TEST STATION SHALL BE PROVIDED. ELECTRICAL CONTRACTOR SHALL FURNISH ACCESS PANELS TO AREAS THAT REQUIRE SERVICING, TROUBLE SHOOTING, ETC.
28. THE "END OF LINE RESISTANCE" OF EACH CIRCUIT SHALL BE TESTED IN THE PRESENCE OF THE I.O.R. AND SHALL NOT EXCEED THE LISTED MANUFACTURER'S MINIMUM OPERATING VOLTAGE.
29. UNDERGROUND AND EXTERIOR CONDUITS TO HAVE WATERTIGHT FITTINGS AND WIRE LISTED FOR WET LOCATIONS, IN ACCORDANCE WITH CEC, SECTIONS 110.11, 300.5(B), 300.6, 300.9, 310.10, AND 760.3(D).
30. FIRE ALARM SYSTEM IS A FULLY AUTOMATIC SYSTEM. CONTRACTOR TO UTILIZE AREA COVERAGE SMOKE DETECTORS AND ADDRESSABLE CONTROL RELAYS FOR THE SHUTDOWN AND/OR CLOSURE OF HVAC UNITS AND COMBINATION SMOKE/FIRE DAMPERS. CONTROL RELAYS TO BE LOCATED WITHIN 3FT OF THE CONTROLLED CIRCUIT OR APPLIANCE PER NFPA 72, SECTION 21.2.4.
31. PROVIDE (VIA CHANGE ORDER PROCESS) APPROPRIATE MANUFACTURER PRODUCT DATA SHEETS AND APPLICABLE CSFM LISTINGS FOR ALL SUBSTITUTED MANUFACTURER'S MATERIAL, EQUIPMENT OR APPLIANCES, TO DSA PRIOR TO START OF INSTALLATION.
32. CONTRACTOR SHALL PROVIDE FIRE WATCH FOR ALL OCCUPIED AREAS OF WORK WHERE THE REQUIRED FIRE ALARM SYSTEM IS OUT OF SERVICE FOR THE DURATION OF THE SYSTEM OUTAGE. FIRE WATCH AND SYSTEM/EQUIPMENT SHALL BE PER CFC, SECTION 901.7.
33. EMERGENCY VOICE/ALARM COMMUNICATION SYSTEMS SHALL BE DESIGNED AND INSTALLED IN ACCORDANCE WITH NFPA 72. THE OPERATION OF ANY AUTOMATIC FIRE DETECTOR, SPRINKLER WATERFLOW DEVICE OR MANUAL FIRE ALARM BOX SHALL AUTOMATICALLY SOUND AN ALERT TONE FOLLOWED BY VOICE INSTRUCTIONS GIVING APPROVED INFORMATION AND DIRECTIONS FOR A GENERAL OR STAGED EVACUATION IN ACCORDANCE WITH THE FIRE SAFETY EVACUATION PLANS REQUIRED BY CFC, SECTION 404 PER CBC/CFC, SECTION 907.5.2.2
34. EMERGENCY VOICE/ALARM COMMUNICATION SYSTEMS SHALL HAVE THE CAPABILITY TO BROADCAST LIVE VOICE MESSAGES BY PAGING ZONES ON A SELECTIVE AND ALL–CALL BASIS PER CBC/CFC, SECTION 907.5.2.2.2.
35. EMERGENCY VOICE/ALARM COMMUNICATION SYSTEMS SHALL BE PROVIDED WITH AN APPROVED EMERGENCY POWER SOURCE PER CBC/CFC, SECTION 907.5.2.2.5.
36. UPON DETECTION OF CARBON MONOXIDE THE FIRE ALARM SYSTEM SHALL PRODUCE A FOUR–PULSE TEMPORAL PATTERN SIGNAL WITHIN THE BUILDING AND COMPLY WITH NFPA 720, SECTION 5.8.6.5.
37. ALL MEMBRANE AND THROUGH–PENETRATIONS OF RATED ASSEMBLIES SHALL BE PROTECTED BY AN APPROVED FIRE STOP SYSTEM AS IDENTIFIED IN CBC, CHAPTER 7, UL OR OTHER LAB TESTING CRITERIA. APPROVED TYPES OF MATERIALS SHALL BE IDENTIFIED WITHIN THE FIRE ALARM SECTION OF THE PROJECT SPECIFICATIONS.
38. CONTROL PANELS AND REMOTE ANNUNCIATORS SHALL BE INSTALLED WITH THEIR BOTTOMS MOUNTED AT 48" ABOVE THE FINISHED FLOOR.

SEQUENCE OF OPERATIONS

ACTION / DEVICE	120 VOLT POWER FAILURE	SYSTEM TROUBLE, WIRING FAULT OR OPEN, GROUND FAULT, SYSTEM LOW BATTERY, CIRCUIT SHORT	AREA SMOKE DETECTOR	AREA or ATTIC HEAT
SOUND CONTROL PANEL TROUBLE BUZZER	YES	YES	NO	NO
SOUND CONTROL PANEL SUPERVISORY BUZZER	NO	NO	NO	NO
SOUND CONTROL PANEL ALARM BUZZER	NO	NO	YES	YES
ACTIVATE RELAY FOR CENTRAL STATION MONITORING	YES	YES	YES	YES
ANNUNCIATE AT FIRE ALARM CONTROL PANEL (ALARM)	NO	NO	YES	YES
ANNUNCIATE AT FIRE ALARM CONTROL PANEL (TROUBLE)	YES	YES	NO	NO
ANNUNCIATE AT REMOTE ANNUNCIATOR PANEL (ALARM)	NO	NO	YES	YES
ANNUNCIATE AT REMOTE ANNUNCIATOR PANEL (TROUBLE)	YES	YES	NO	NO
ACTIVATE AUDIBLE NOTIFICATION ALARM SIGNAL THROUGHOUT CAMPUS	NO	NO	YES	YES
ACTIVATE VISUAL NOTIFICATION ALARM SIGNAL THROUGHOUT CAMPUS	NO	NO	YES	YES
ACTIVATE AUDIBLE NOTIFICATION ALARM SIGNAL THROUGHOUT BLDG	NO	NO	YES	YES
ACTIVATE VISUAL NOTIFICATION ALARM SIGNAL THROUGHOUT BLDG	NO	NO	YES	YES
NOTIFY FIRE DEPARTMENT VIA MONITORING STATION	NO	NO	YES	YES
SOUND AN ALERT TONE FOLLOWED BY VOICE INSTRUCTION	NO	NO	YES	YES

SYMBOL	DESCRIPTION	MODEL	MANUFACTURER	BACKBOX	MOUNTING HEIGHT	C.S.F.M. NUMBER
VECP	(E)FIRE ALARM / VOICE EVACUATION SYSTEM CONTROL PANEL A#01–117438	NFS2–3030/ DVC–EM NCA–2 (DISPLAY)	NOTIFIER	EXISTING	EXISTING	EXISTING
AMP	VOICE EVACUATION AUDIO AMPLIFIER	DAA2 SERIES	NOTIFIER	PROVIDED	5'–6'' A.F.F. TO TOP	7165–0028:0224
FAPS	FIRE ALARM POWER SUPPLY	FCPS–24S6	NOTIFIER	PROVIDED	5'–6'' A.F.F. TO TOP	7315–0028:0225
FATC	FIRE ALARM TERMINAL CABINET	N/A	BY ELECTRICIAN	18"SQ. x 6"D U.N.O. (RED)	VERIFY IN FIELD	N/A
MS	MANUAL PULL STATION (ADDRESSABLE)	NBG–12LX	NOTIFIER	4S DEEP BOX W/ SINGLE GANG RING	48'' A.F.F. TO TOP OF ACTIVATING HANDLE	7150–0028:0199
SD	AREA SMOKE DETECTOR (ADDRESSABLE PHOTO)	FSP–951 B300–6 (BASE)	NOTIFIER	4S DEEP BOX W/ 3–0 RING	CEILING	7272–0028:0503 7300–1653:0109
HD	AREA HEAT DETECTOR (ADDRESSABLE FIXED 190°F)	FST–951H B300–6 (BASE)	NOTIFIER	4S DEEP BOX W/ 3–0 RING	ABOVE ACCESSIBLE CEILING, U.O.N.	7270–0028:0502 7300–1653:0109
F cd	FIRE ALARM STROBE (CEILING)	SCWL (WHITE)	SYSTEM SENSOR	4S DEEP BOX W/ 4S EXTENSION	CEILING	7125–1653:0504
S WP	FIRE ALARM SPEAKER (WEATHERPROOF/WALL)	SPRK (RED)	SYSTEM SENSOR	WP BACKBOX PROVIDED	90'' A.F.F. TO TOP	7320–1653:0201
SF cd	FIRE ALARM SPEAKER/STROBE (CEILING)	SPSCWL (WHITE)	SYSTEM SENSOR	4S DEEP BOX W/ 4S EXTENSION	CEILING	7320–1653:0505
SYNC	AUDIBLE/VISUAL SYNC MODULE	MDL3	SYSTEM SENSOR	5S DEEP BOX W/ 5S EXTENSION	VERIFY IN FIELD	7300–1653:0202
J	FIRE ALARM JUNCTION BOX	N/A	BY ELECTRICIAN	4S BOX, U.N.O.	VERIFY IN FIELD	N/A

A.F.F. ABOVE FINISHED FLOOR
E.O.L. END OF LINE RESISTOR
(E) EXISTING DEVICE
F.B.O. FURNISHED BY OTHERS
TSP TWISTED SHIELDED PAIR

N/A NOT APPLICABLE
U.N.O. UNLESS NOTED OTHERWISE
VL VERIFY LOCATION IN FIELD
WP WEATHERPROOF DEVICE
cd INDICATED CANDELA RATING OF STROBE DEVICE

WIRING LEGEND

WIRE DESIGNATION	WIRE IN CONDUIT	WIRE IN CONDUIT UNDERGROUND/WET LOC.	UNDERGROUND/WET WIRE DESIGNATION
INITIATING CIRCUITS Z	2 CONDUCTOR #18 FPL TWISTED/ UNSHEILDED W/OVERALL JACKET	2 CONDUCTOR #18 FPL TWISTED/ UNSHEILDED W/OVERALL JACKET	INITIATING CIRCUITS ZU
POWER CKT. P	2 CONDUCTOR #12 THHN STRANDED	2 CONDUCTOR #12 STRANDED TYPE THWN	POWER CKT. PU
NETWORK CONTROL C	2 CONDUCTOR #12 THHN STRANDED	2 CONDUCTOR #12 STRANDED TYPE THWN	NETWORK CONTROL CU
ANNUNCIATOR D	4 CONDUCTOR #18 FPL TWISTED/ UNSHIELDED W/OVERALL JACKET	4 CONDUCTOR #18 FPL TWISTED/ UNSHIELDED W/OVERALL JACKET	ANNUNCIATOR DU
AUDIBLE LOOP B	2 CONDUCTOR #18 FPL TWISTED/ SHIELDED W/OVERALL JACKET	2 CONDUCTOR #18 FPL TWISTED/ SHIELDED W/OVERALL JACKET	AUDIBLE LOOP BU
AUDIBLE (SPEAKER) A	2 CONDUCTOR #16 FPL TWISTED/ SHIELDED W/OVERALL JACKET	2 CONDUCTOR #16 FPL TWISTED/ SHIELDED W/OVERALL JACKET	AUDIBLE (SPEAKER) AU
VISUAL (STROBE) V	2 CONDUCTOR #12 FPL TWISTED/ UNSHIELDED W/OVERALL JACKET	2 CONDUCTOR #12 FPL TWISTED/ UNSHIELDED W/OVERALL JACKET	VISUAL (STROBE) VU
S–BUS S	4 CONDUCTOR #16 FPLR (2 PAIR)	4 CONDUCTOR #16 FPLR (2 PAIR)	S–BUS SU

NOTE:
1. ALL WIRE TO BE CLASS 'B' PATHWAY SURVIVAL LEVEL 1.
2. ALL CABLING TO BE WEST PENN OR APPROVED EQUAL.
3. COLOR CODE ALL FIRE ALARM CONDUCTORS PER DISTRICT STANDARDS. VERIFY COLOR SCHEMES PRIOR TO ORDERING FIRE ALARM CONDUCTORS.

FIRE ALARM SYSTEM TESTING NOTES:

1. INSTALLATION OF THE SYSTEMS SHALL NOT BE STARTED UNTIL DETAILED DESIGN DOCUMENTS AND SPECIFICATIONS, INCLUDING STATE FIRE MARSHAL LISTING NUMBERS FOR EACH COMPONENT OF THE SYSTEM HAS BEEN APPROVED BY DSA.
2. A STAMPED SET OF APPROVED FIRE ALARM DESIGN DOCUMENTS SHALL BE ON THE JOB SITE AND USED FOR INSTALLATION.
3. DISTRICT SHALL PROVIDE A CERTIFIED IMPARTIAL FIRE ALARM INSPECTOR. DSA, ARCHITECT/ENGINEER AND OWNER SHALL BE NOTIFIED A MINIMUM OF 48 HOURS PRIOR TO THE FINAL INSPECTION AND/OR TESTING.
4. 100% OF THE SYSTEM IN CONTRACT WILL BE TESTED AND INSPECTED WITH THE CONTRACTOR OR CONTRACTOR'S SUB AND DISTRICT'S ETS STAFF MEMBER PRESENT. INSPECTION WILL INCLUDE, BUT NOT BE LIMITED TO, REMOVING STROBES/HORNS TO CHECK FOR "T–TAPS", REMOVING J–BOX COVERS TO CHECK WIRE GAGE AND SPLICES.
5. FOLLOW ALL REQUIREMENTS AND INSTRUCTIONS PROVIDED BY MANUFACTURER UPON INSTALLATION OF MANUFACTURER'S PRODUCTS AND DEVICES.
6. PRIOR TO REQUESTING FINAL APPROVAL OF THE INSTALLATION, THE INSTALLING CONTRACTOR SHALL FURNISH A WRITTEN STATEMENT TO THE FIRE CODE OFFICIAL THAT THE SUBJECT FIRE PROTECTION SYSTEM HAS BEEN INSTALLED IN ACCORDANCE WITH APPROVED PLANS AND HAS BEEN TESTED IN ACCORDANCE WITH THE MANUFACTURER'S SPECIFICATIONS AND THE APPROPRIATE INSTALLATION STANDARD. ANY DISCREPANCIES BETWEEN THE DRAWINGS AND THE CODE OR RECOGNIZED STANDARDS SHALL BE BROUGHT TO THE ATTENTION OF DSA AND THE ARCHITECT/ENGINEER OF THE PROJECT. ANY DEVIATIONS FROM THE DESIGN STANDARDS SHALL BE NOTED AND COPIES OF THE APPROVALS FOR SUCH DEVIATIONS SHALL BE ATTACHED TO THE WRITTEN STATEMENT. (CFC, SECTION 901.2.1)
7. UPON COMPLETION OF SYSTEM INSTALLATION, THE SYSTEM SHALL BE TESTED IN THE PRESENCE OF AND IN A MANNER ACCEPTABLE TO DSA/I.O.R. CONTRACTOR SHALL SUPPLY NECESSARY TESTING EQUIPMENT, INCLUDING A "SOUND LEVEL METER" TO CHECK ACCEPTABLE NOISE LEVELS OF AUDIBLE DEVICES. PROVIDE TEST RESULTS PER NFPA 72 TO ARCHITECT, D.S.A., I.O.R. AND TO LOCAL FIRE AUTHORITY, PER CFC, SECTION 907.8.2.
8. INSPECTION, TESTING AND MAINTENANCE SHALL BE IN COMPLIANCE WITH NFPA 72, CHAPTER 14, REACCEPTANCE TESTING SHALL BE IN COMPLIANCE WITH NFPA 72, SECTION 14.4.2.
9. LOCAL FIRE AUTHORITY NOTIFICATION TO BE DOCUMENTED AND RECORDED AS "UNAVAILABLE" OR "CONFIRM WHEN PRESENT".
10. PRIOR TO COMPLETION OF FIRE ALARM SYSTEM THE TWO WAY COMMUNICATION SYSTEM SHALL BE TESTED AND CERTIFIED VIA NFPA 72 EMERGENCY COMMUNICATION SYSTEM SUPPLEMENTARY RECORD OF INSPECTION AND TESTING FORM.
11. THE INSTALLING CONTRACTOR SHALL PROVIDE A COMPLETED RECORD OF COMPLETION PER NFPA 72, FIGURE 7.8.2(A) THROUGH (I) AS APPLICABLE. A COMPLETE RECORD OF THE TESTS AND OPERATIONS OF EACH SYSTEM SHALL BE KEPT UNTIL THE NEXT TEST AND FOR ONE YEAR AFTER PER NFPA 72, SECTION 7.7.1.
12. FIRE ALARM SYSTEM DOCUMENTS SHALL BE HOUSED IN THE DOCUMENT CABINET. THE DOCUMENT CABINET SHALL BE INSTALLED AT THE SYSTEM CONTROL UNIT OR AT ANOTHER APPROVED LOCATION AT THE PROTECTED PREMISES AS REQUIRED BY NFPA 72, SECTION 7.7.2.
13. THE INSTALLING CONTRACTOR SHALL PROVIDE SYSTEM PROGRAMMING FOR SUPERVISORY MONITORING PER CFC, SECTION 907.6.6. SUPERVISORY MONITORING SHALL BE TESTED AND VERIFIED AS SENDING CORRECT SIGNALS IN CONJUNCTION WITH FINAL ACCEPTANCE TEST. OWNER SHALL BE RESPONSIBLE FOR ESTABLISHING AND MAINTAINING A FIRE ALARM SYSTEM MONITORING CONTRACT.
14. THE VOICE/ALARM COMMUNICATION SYSTEM VOICE MESSAGE SHALL COMPLY WITH NFPA 72 SECTIONS 18.4 AND 24.4 FOR GENERAL REQUIREMENTS, INTELLIGIBILITY, AUDIBILITY, MESSAGE PRIORITY, TONES, ETC. REFER TO NFPA 72 ANNEX D, D.1 THROUGH D.6 FOR DETERMINING THE FUNDAMENTALS OF TEST PROTOCOL AND METHOD OF MEASURING INTELLIGIBILITY.

PLAN REVIEW REQUIREMENTS AND APPLICABLE CODES AND STANDARDS

1.0 FIRE ALARM PLAN REVIEW

A. FIRE ALARM PLAN REVIEW
1. AS PART OF THE FIRE ALARM PLAN REVIEW, PLANS AND SPECIFICATIONS FOR THE FIRE ALARM SYSTEM HAVE BEEN INCLUDED FOR REVIEW AND COMMENT BY THE DIVISION OF THE STATE ARCHITECT, FIRE & LIFE SAFETY.
2. THE FLOOR PLANS AND SPECIFICATIONS INCLUDE THE FOLLOWING : LOCATIONS OF ALL ALARM–INITIATING AND SIGNALING DEVICES, CONTROL AND TROUBLE SIGNALING EQUIPMENT (FIRE ALARM CONTROL PANEL, BUILDING ANNUNCIATION (FIRE ALARM ANNUNCIATOR).

B. FIRE ALARM COMPONENTS
1. PROVIDE CALIFORNIA STATE FIRE MARSHAL LISTING SHEETS AND U.L. LISTING NUMBERS FOR EACH COMPONENT.
2. EQUIPMENT POWER CONNECTIONS.
3. RISER DIAGRAM SHOWING EACH COMPONENT.
4. VOLTAGE DROP CALCULATIONS.
5. POWER CONNECTIONS TO APPLICABLE COMPONENTS.
6. WIRE AND/OR CABLING TYPES AND SIZES.
7. PROVIDE CATALOG DATA SHEETS FOR ALL FIRE ALARM SYSTEM COMPONENTS.
8. CONTRACTOR TO FURNISH STATEMENT OF COMPLIANCE BEFORE REQUESTING FINAL APPROVAL OF INSTALLATION IN ACCORDANCE WITH CFC, SECTION 901.2.1.
9. A SATISFACTORY TEST OF THE ENTIRE SYSTEM SHALL BE MADE IN THE PRESENCE OF THE PROJECT INSPECTOR AND, IF APPLICABLE, LOCAL FIRE AUTHORITY.
10. THE INSTALLER SHALL SUPPLY THE OWNER WITH A WRITTEN OPERATING, TESTING AND MAINTENANCE INSTRUCTIONS, POINT–TO–POINT AS BUILT DRAWINGS AND EQUIPMENT SPECIFICATIONS. AS BUILT RECORDS SHALL BE MAINTAINED ON PREMISES FOR A MINIMUM OF THREE YEARS PER CFC, SECTION 901.6.3.

C. SCOPE OF WORK
1. INSTALL A FULLY AUTOMATIC, ADDRESSABLE, FIRE ALARM SYSTEM WITH AN EMERGENCY VOICE/ALARM COMMUNICATION SYSTEM WITHIN ALL BUILDINGS IN SCOPE OF PROJECT AS DEFINED PER CFC, SECTION 907.2.3 AND NFPA 72.
2. FIRE ALARM SYSTEM SHALL TRANSMIT THE ALARM, SUPERVISORY AND TROUBLE SIGNALS TO AN APPROVED SUPERVISING STATION IN ACCORDANCE WITH NFPA 72. THE SUPERVISING STATION SHALL BE U.L. LISTED AS UUFX (CENTRAL STATION) PER CFC, SECTION 907.6.6.3.
3. FIRE SPRINKLER SYSTEM UTILIZED FOR HEAT DETECTION IN ALL ABOVE CEILING, ATTIC SPACES AND CONCEALED COMBUSTIBLE AREAS. PROVIDE HEAT DETECTORS WHERE FIRE SPRINKLERS HAVE BEEN OMITTED PER NFPA 72 AND NFPA 13.

2.0 LIST OF CURRENT CALIFORNIA CODE OF REGULATIONS

APPLICABLE CODES AS OF JANUARY 1, 2023

2022 California Administrative Code (CAC), Part 1, Title 24, C.C.R.

2022 California Building Code (CBC), Volumes 1 & 2, Part 2, Title 24, C.C.R. (2021 International Building Code of the International Code Council, with California Amendments.)

2022 California Electrical Code (CEC), Part 3, Title 24, C.C.R. (2020 National Electric Code of the National FIre Protection Assoc., NFPA)

2022 California Mechanical Code (CMC), Part 4, Title 24, C.C.R. (2021 Uniform Mechanical Code of the International Association of Plumbing and Mechanical Officials, IAPMO.)

2022 California Plumbing Code (CPC), Part 5, Title 24, C.C.R. (2021 Uniform Plumbing Code of the International Association of Plumbing and Mechanical Officials, IAPMO.)

2022 California Energy Code, Part 6, Title 24, C.C.R.

2022 California Historical Building Code, Title 24, C.C.R.

2022 California Fire Code (CFC), Part 9, Title 24, C.C.R. (2021 International Fire Code with California Amendments)

2022 California Existing Building Code (CEBC), Part 10, Title 24, C.C.R. (2021 International Existing Building Code of the International Code Council, with amendments)

2022 California Green Building Standards Code (CALGreen), Part 11, Title 24, C.C.R.

2022 California Referenced Standards Code, Part 12, Title 24, C.C.R.

LIST OF FEDERAL CODES AND STANDARDS (if applicable)

Americans with Disabilities Act (ADA), Title II or Title III

For Title II: Uniform Federal Accessibility Standards (UFAS) or ADA Standards for Accessible Design (Appendix A of 28 CFR Part 36.)

For Title III: ADA Standards for Accessible Design (Appendix A of 28 CFR Part 36.)

Americans with Disabilties Act Accessibility Guidelines (ADAAG) (with amendments through September 2002)

PARTIAL LIST OF APPLICABLE NFPA STANDARDS:

NFPA 13-Automatic Sprinkler Systems (CA Amended)	2022 Edition
NFPA 14-Standpipes Systems (CA Amended)	2019 Edition
NFPA 17-Standard for Dry Chemical Extinguishing Systems	2021 Edition
NFPA 17a-Standard for Wet Chemical Systems	2021 Edition
NFPA 20-Installation Stationary Pumps for Fire Protection	2019 Edition
NFPA 24-Installation of Private Fire Service Mains (CA Amended)	2019 Edition
NFPA 72-National Fire Alarm and Signaling Code (CA Amended)	2022 Edition
NFPA 80-Fire Door and Other Opening Protectives	2019 Edition
NFPA 92-Standard for Smoke Control Systems	2018 Edition
NFPA 253-Critical Radiant Flux of Floor Covering Systems	2019 Edition
NFPA 2001-Clean Agent Fire Extinguishing Systems (CA Amended)	2018 Edition
ICC 300-ICC Standards on Bleachers, Folding and Telescoping Seating and Grandstands	2017 Edition
UL 38-Manual Operating Signal Boxes (with revisions through February 2, 2005 as amended)	1999 Edition
UL 268-Smoke Detectors for Fire Alarm Systems	2016 Edition
UL 268A-Smoke Detectors Duct Applications (with revisions through October 22, 2003 as amended)	2009 Edition
UL 300-Fire Testing of Fire Extinguishing Systems for Protection Of Restaurant Cooking Areas (with revisions through December 2014 as amended)	2005 Edition
UL 464-Audible Signal Appliances (with revisions through October 10, 2003 as amended)	2003 Edition
UL 521-Heat Detectors for Fire Protective Signaling Systems (with revisions through July 20, 2005 as amended)	1999 Edition
UL 864-Control Units for Fire Protective Signaling Systems (with revisions through March 2018)	2014 Edition

Reference code section for NFPA Standards-2022 CBC (SFM) Chapter 35
See Chapter 35 for State of California amendments to NFPA Standards.

COMPLETE FIRE ALARM SUBMITTAL
AUTOMATIC ADDRESSABLE FIRE ALARM SYSTEM WITH EMERGENCY VOICE/ALARM COMMUNICATION SYSTEM

IDENTIFICATION STAMP
DIV. OF THE STATE ARCHITECT
APP: 01-120592 INC:
REVIEWED FOR
SS ☑ FLS ☑ ACS ☑
DATE: 7/11/2023

OWNER: San Rafael City Schools

PROJECT NAME: Venetia Valley School Middle School Restroom Addition

CLIENT ADDRESS: Enter address here

REGISTERED PROFESSIONAL ENGINEER RAYMOND W. SWARTZ No. 15610 Ex. 12/31/2023 ELECTRICAL STATE OF CALIFORNIA

REVISIONS:

	DESCRIPTION	DATE
△		
△		
△		
△		
△		
△		
△		
△		
△		
△		
△		

PROJECT NO: Project Number
DATE ISSUED: Issue Date
SCALE: As indicated

EFA0.01

FIRE ALARM NOTE AND SYMBOLS

tk1sc COLLABORATIVE
11870 Pierce Street, Suite 160
Riverside, California 92505
951.299.4160 www.tk1sc.com
Project Leader - Bill Voller
Electrical Lead - Nikolas Bruno
tk1sc Job #: B2203109.000

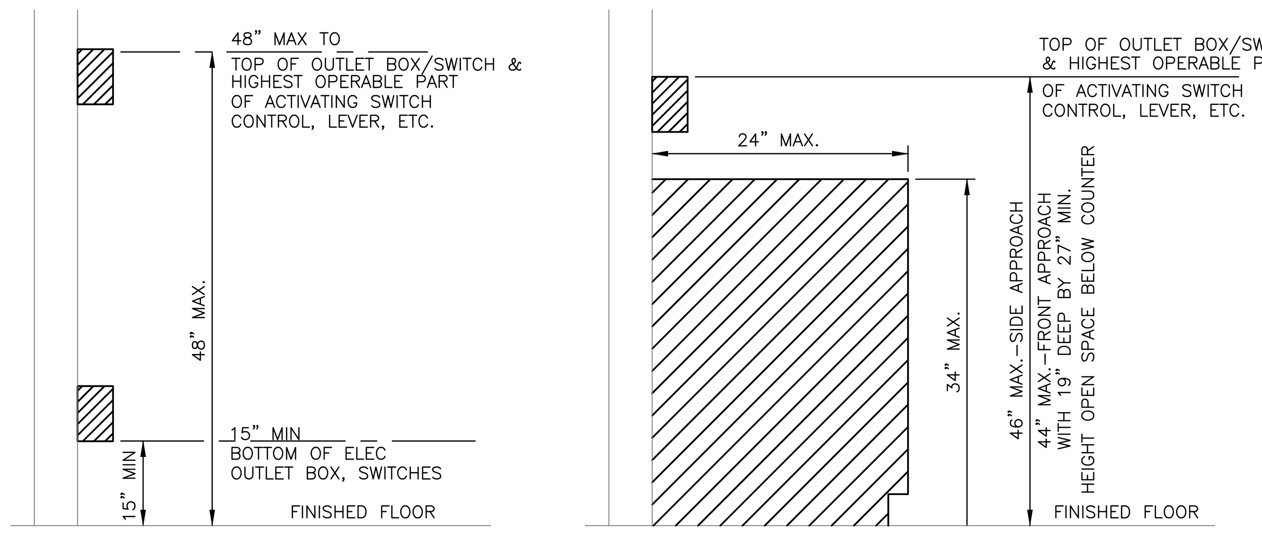

MOUNTING HEIGHT
11B–308.2.1
11B–308.3.1

OVER OBSTRUCTION
11B–308.2.2
11B–308.3.2

ALL DEVICE HEIGHTS DEPICTED SHALL BE MODIFIED AS REQUIRED BY GOVERNING BUILDING CODES. CONTRACTOR TO VERIFY/RECONCILE APPLICABLE CODE REQUIREMENTS AND ANY DEVICE HEIGHT REQUIREMENTS DEPICTED ON ARCHITECTURAL OR INTERIOR DESIGN PLANS & SPECIFICATIONS PRIOR TO DEVICE ROUGH–IN. CONFLICTS OR LACK OF MOUNTING HEIGHT SPECIFICITY ON THE ARCHITECTURAL OR INTERIOR DESIGN PLANS & SPECIFICATIONS SHALL BE CAUSE FOR THE CONTRACTOR TO ISSUE A FORMAL WRITTEN RFI FOR RESOLUTION. DEVICE MOUNTING HEIGHT CLARIFICATIONS/SPECIFICATIONS SHALL NOT RESULT IN AN ADDITIONAL COST TO THE OWNER – CONTRACTOR SHALL INCLUDE ALL COSTS IN BASE BID.

MOUNTING HEIGHT OVER OBSTRUCTION DETAIL (8)

SCALE: NTS

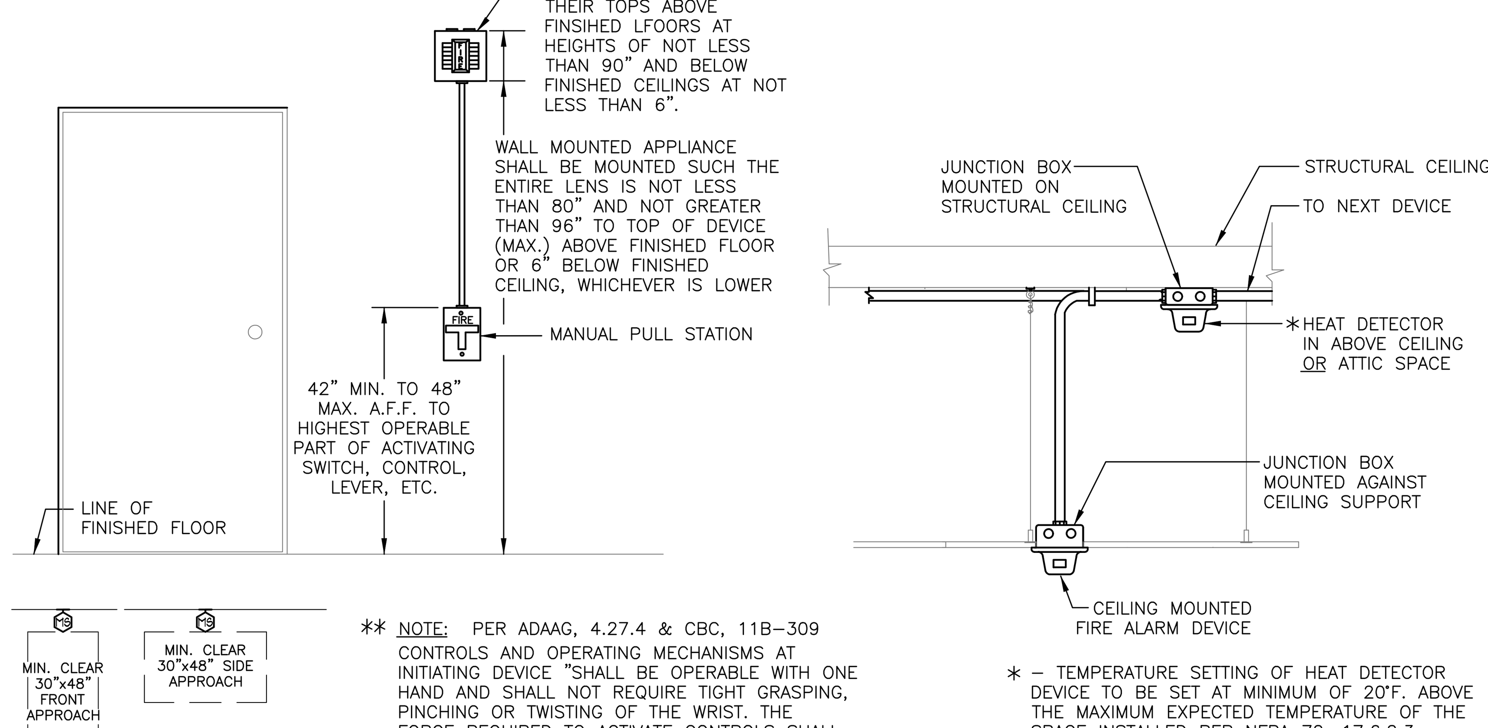

** NOTE: PER ADAAG, 4.27.4 & CBC, 11B–309 CONTROLS AND OPERATING MECHANISMS AT INITIATING DEVICE "SHALL BE OPERABLE WITH ONE HAND AND SHALL NOT REQUIRE TIGHT GRASPING, PINCHING OR TWISTING OF THE WRIST. THE FORCE REQUIRED TO ACTIVATE CONTROLS SHALL BE NO GREATER THAN 5lbf (22.2N)."

* – TEMPERATURE SETTING OF HEAT DETECTOR DEVICE TO BE SET AT MINIMUM OF 20°F. ABOVE THE MAXIMUM EXPECTED TEMPERATURE OF THE SPACE INSTALLED PER NFPA 72, 17.6.2.3.

DEVICE MOUNTING DETAILS (7)

SCALE: N.T.S.

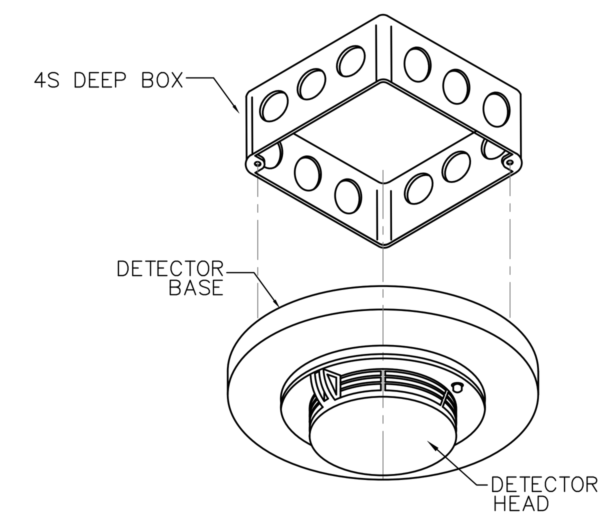

DETECTOR MOUNTING DETAIL (5)

SCALE: N.T.S.

COMPLETE FIRE ALARM SUBMITTAL
AUTOMATIC ADDRESSABLE FIRE ALARM SYSTEM WITH EMERGENCY VOICE/ALARM COMMUNICATION SYSTEM

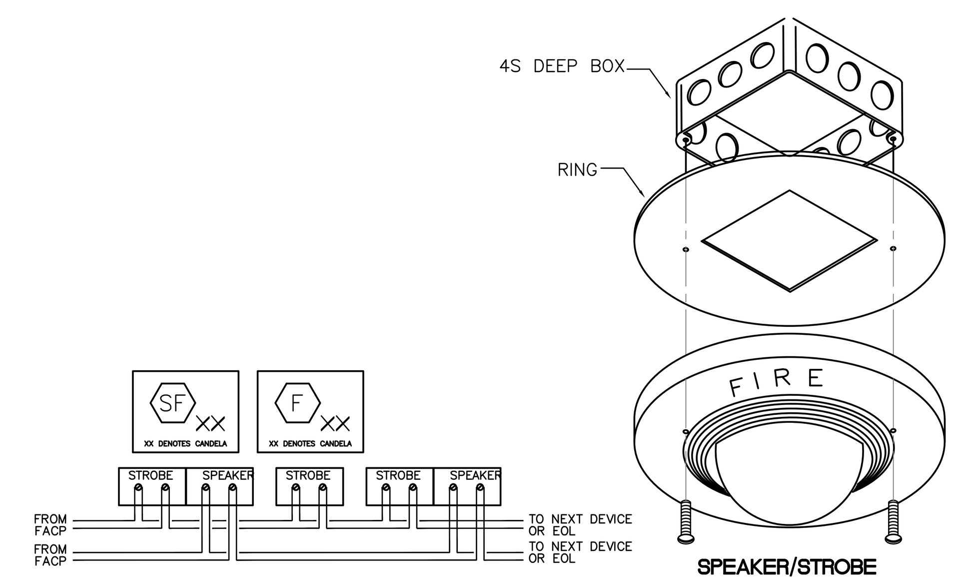

CEILING MTD. AUDIBLE/VISUAL (2)

SCALE: N.T.S.

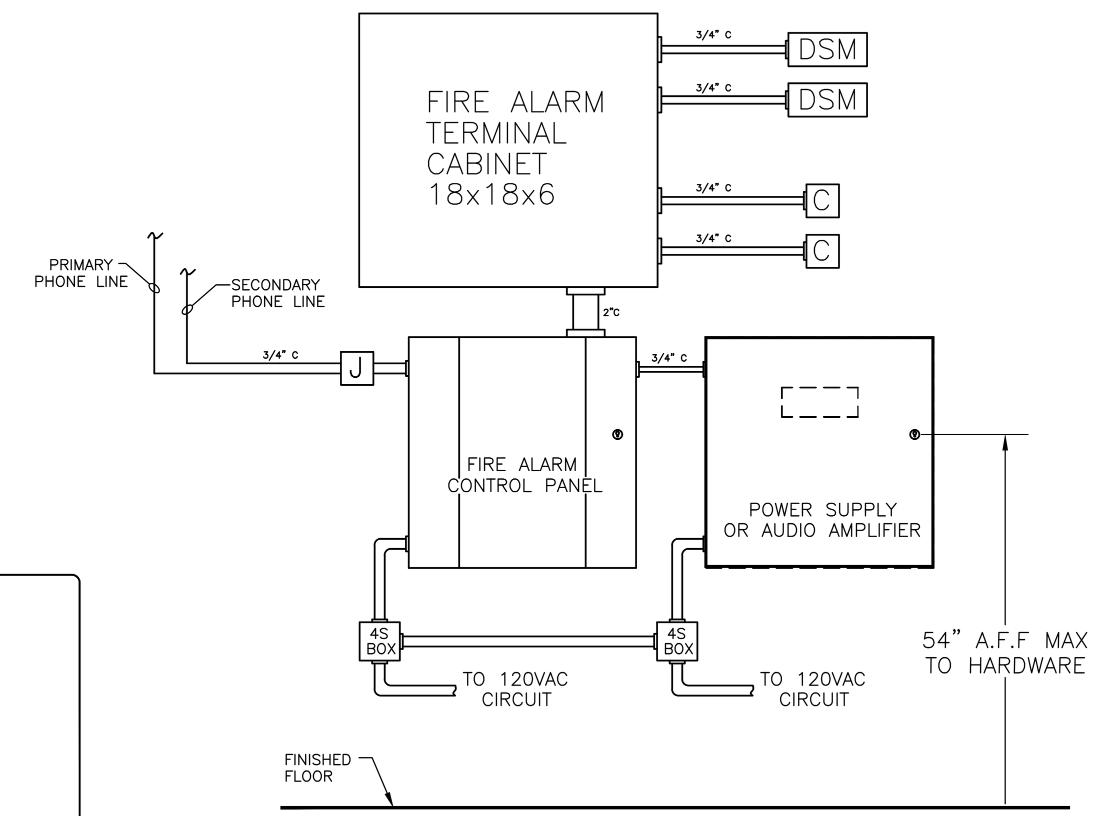

FIRE ALARM PANEL/POWER SUPPLY MOUNTING ELEVATION (4)

SCALE: N.T.S.

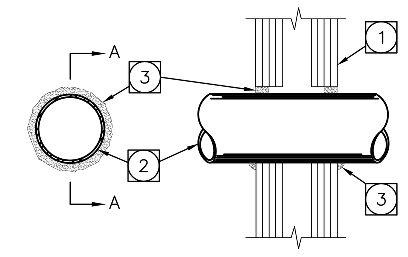

SECTION A–A

PENETRATION THRU GYPSUM BOARD WALL
NO SCALE

System No.W–L–1252
January 22, 2015
F Ratings – 1, 2, 3 and 4 Hr (See Items 1 and 3)
T Ratings – 0 Hr
L Rating At Ambient – less than 1 CFM/sq ft
L Rating At 400 F – less than 1 CFM/sq ft

1. Wall Assembly – The 1, 2, 3 or 4 hr fire–rated gypsum wallboard/stud wall assembly shall be constructed of the materials and in the manner described in the individual U400, V400 or W400 Series Wall or Partition Designs in the UL Fire Resistance Directory and shall include the following construction features:

A. Studs – Wall framing may consist of steel channel studs. Steel studs to be min 3–1/2 in. (89 mm) wide by 1–3/8 in. (35 mm) deep channels spaced max 24 in. (610 mm) OC.
B. Gypsum Board* – Nom 1/2 or 5/8 in. (13 or 16 mm) thick, 4 ft. (122 cm) wide with square or tapered edges. The gypsum wallboard type, thickness, number of layers, fastener type and sheet orientation shall be as specified in the individual U300 or U400 Series Design in the UL Fire Resistance Directory. Max diam of opening is 26 in. (660 mm).
The hourly F and FH Ratings of the firestop system are equal to the hourly fire rating of the wall assembly in which it is installed.

2. Through Penetrant – One metallic pipe, conduit or tube to be installed either concentrically or eccentrically within the firestop system. The annular space between the pipe, conduit or tube and periphery of opening shall be min 0 in. (point contact) to max 7/8 in. (22 mm). Pipe, conduit or tube to be rigidly supported on both sides of wall assembly.
A. Steel Pipe – Nom 4 in. (102 mm) diam (or smaller) Schedule 10 (or heavier) steel pipe.
B. Iron Pipe – Nom 4 in. (102 mm) diam (or smaller) cast or ductile iron pipe.
C. Conduit – Nom 4 in. (102 mm) diam (or smaller) rigid steel conduit.
D. Conduit – Nom 4 in. (102 mm) diam (or smaller) steel electrical metallic conduit.
E. Copper Tubing – Nom 4 in. (102 mm) diam (or smaller) Type L (or heavier) copper tubing.
F. Copper Pipe – Nom 4 in. (102 mm) diam (or smaller) Regular (or heavier) copper pipe.

3. Fill, Void or Cavity Material* – Sealant – 1. Fill material applied within annulus , flush with both surfaces of wall. Type and thickness of sealant is dependent on F and FH Ratings as indicated in Table below. An additional 1/2 in. (13 mm) diameter bead of sealant applied at penetrant/gypsum board interface at point contact location on both surfaces of wall.
HILTI CONSTRUCTION CHEMICALS, DIV OF HILTI INC –– FS–ONE Sealant, FS–ONE MAX Intumescent Sealant or CP 606 Sealant

F, FH RATINGS (HR)	SEALANT TYPE	SEALANT THICKNESS, IN. (MM)
1,2	FS–ONE, FS–ONE MAX OR CP 606	5/8 (16)
3	FS–ONE, FS–ONE MAX OR CP 606	1 (25)
4	FS–ONE, FS–ONE MAX	1 (25)

*Bearing the UL Classification Marking

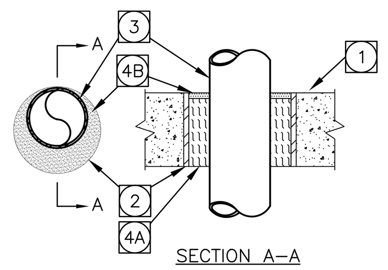

SECTION A–A

PENETRATION THRU CONCRETE WALL OR FLOOR
NO SCALE

System No. C–AJ–1630
DECEMBER 20, 2013
F Ratings – 2, 3, and 4 Hr (See Item 4)
T Rating – 0 Hr
L Rating At Ambient – less than 1 CFM/sq ft
L Rating At 400 F – less than 1 CFM/sq ft
W Rating – Class I (See Item 4)

1. Floor or Wall Assembly – 1. See Configuration A above. Reinforced lightweight or normal weight (100–150 pcf or 1600–2400 kg/cu meter) concrete as specified in the Table in Item 4 below. Wall may also be constructed of any UL Classified Concrete Blocks'. Max diam of sleeved opening is 32 in. (813 mm).
See Concrete Blocks (CAZT) category in the Fire Resistance Directory for names of manufacturers.

1A. Floor Assembly – See Configuration B above. Min 6 in. (152 mm) thick UL Classified hollow–core Precast Concrete Units'. Max diam of opening is 7 in. (178 mm).
See Precast Concrete Units (CFTV) category in the Fire Resistance Directory for names of manufacturers.

2. Steel Sleeve (Optional) – Nom 32 in. (813 mm) diam (or smaller) Schedule 10 (or heavier) steel pipe sleeve cast or grouted into floor or wall assembly, flush with both surfaces of floor or wall. As an option, sleeve may extend max 2 in. above top surface of floor or beyond one or both surfaces of wall. Steel sleeve may be used in 2 and 3 hr F Rated systems only.

3. Through Penetrants – One metallic pipe, conduit or tubing to be installed either concentrically or eccentrically within the firestop system. Pipe, conduit or tubing to be rigidly supported on both sides of floor or wall assembly. See Table in Item 4 for sizes of penetrants A, B, D and E that may be used. See Item 3C below for size of conduit that may be used. The annular space shall be as specified in Table in Item 4 below. The following types and sizes of metallic pipes, conduits or tubing may be used:

A. Steel Pipe – –– Schedule 10 (or heavier) steel pipe.
B. Iron Pipe – Cast or ductile iron pipe.
C. Conduit – Nom 4 in. (102 mm) diam (or smaller) steel electrical metallic tubing or nom 6 in. (152 mm) diam (or smaller) steel conduit.
D. Copper Tubing – Type L (or heavier) copper tubing.
E. Copper Pipe – Regular (or heavier) copper pipe.

4. Firestop System – The F Rating of the system is dependent upon the type of concrete, thickness of concrete, annular space, fill and packing material thickness, packing material density and penetrant size as shown in the Table below. W Rating applies to annular spaces of min 0 in. (point contact) to max 1–7/8 in. and to Configuration A detail only.

F RATING HR	MIN THICK CONCRETE IN.	ANNULAR SPACE IN.	MIN THICK PACKING MTL IN.	MIN DENSITY PACKING MTL PCF KG/CU MTR	MIN THICK FILL MTL IN.	PENETRANT SIZE IN. DIAM (OR SMALLER) D,E COPPER	A,B STEEL IRON
2	5–1/2(140)	0 TO 1–7/8 (0 TO 48)	5 (127)	4 (64)	1/2 (13)	4 (102)	16 (406)
3	4–1/2(114)	0 TO 2–1/8 (0 TO 54)	4–1/4 (108)	4 (64)	1/4 (6)	6 (152)	30 (762)
4	5–1/2(140)	0 TO 1–7/8 (0 TO 48)	5 (127)	4 (64)	1/2 (13)	4 (102)	8 (203)

A. Packing Material –– Min 4–1/4 or 5 in. (108 or 127 mm) thickness of min 4.0 pcf (64 kg/cu meter) mineral wool batt insulation firmly packet into opening as a permanent form as specified in the Table above. Packing material to be recessed from top surface of floor or top end of sleeve, or from both surfaces of wall or ends of sleeve, as required to accommodate the required thickness of fill material. For hollow–core floor applications as shown in Configuration B, one half of the required thickness of mineral wool packing material shall be installed flush with the bottom surface of the floor and the remaining half of the mineral wool packing material installed at the top of the opening and recessed from the top surface of the floor to accommodate the required thickness of the fill material.

B. Fill, Void or Cavity Material' –– Caulk –– Min 1/4 or 1/2 in. (6 or 13 mm) thickness of fill material as specified in the Table above applied within the annulus, flush with top surface of floor or top end of sleeve, or with both surfaces of wall or ends of sleeve. At the point contact location beMeen pipe and concrete or sleeve, a min 1/2 in. (13 mm) diam bead of fill material shall be applied. As an option, for hollow–core floors, the packing material (Item 4A) on the bottom surface of the floor may be recessed to accommodate a 1/4 in. (6 mm) depth of fill material installed flush with bottom surface of floor.
HILTI CONSTRUCTION CHEMICALS, DIV OF HILTI INC –– CFS–S SIL GG (floors or walls) and CFS–S SIL SL (floors only)

'Bearing the UL Classification Mark

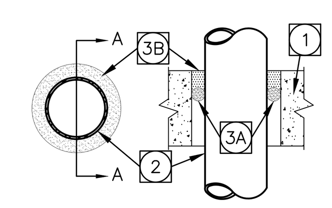

SECTION A–A

PENETRATION THRU CONCRETE FLOOR
NO SCALE

SYSTEM NO C–AJ–1276
April 20, 2012
F RATING–3 HR
T RATING–0 HR

Floor or Wall Assembly – 1. Floor or Wall Assembly –– Min 4–1/2 in. (114 mm) thick reinforced lightweight or normal weight (100–150 pcf or 1600–2400 kg/m3) concrete. Wall may also be constructed of any UL Classified Concrete Blocks*. Max diam of opening is 6 in. (152 mm).

See Concrete Blocks (CAZT) category in the Fire Resistance Directory for names of manufacturers.

2. Through Penetrants – One metallic pipe, conduit or tubing to be centered within the firestop system. A nom annular space of 3/4 in. (19 mm) is required within the firestop system. Pipe, conduit or tubing to be rigidly supported on both sides of floor or wall assembly. The following types and sizes of metallic pipes, conduits or tubing may be used:

A. Steel Pipe – Nom 4 in. (102 mm) diam (or smaller) Schedule 10 (or heavier) steel pipe.
B. Conduit – Nom 4 in. (102 mm) diam (or smaller) steel electrical metallic tubing or steel conduit.

3. Firestop System – The firestop system shall consist of the following:
A. Packing or Forming Materials –– Optional –– One of the following packing or forming materials may be used:

A1. Foam Backer Rod –– Foam backer rod tightly packed into the opening as a permanent form. Packing material to be recessed from the top surface of floor or both surfaces of wall as required to accommodate the required thickness of putty.

A2. Mineral Wool Batt Insulation –– Min 4 pcf (64 kg/m3), tightly packed into the opening as a permanent form. Packing material to be recessed from the top surface of floor or both surfaces of wall as required to accommodate the required thickness of putty.

A3. Forming Material* –– Forming material to be foamed into the opening as a permanent form. Forming material to be recessed from the top surface of floor or both surfaces of wall as required to accommodate the required thickness of putty.
HILTI CONSTRUCTION CHEMICALS, DIV OF HILTI INC –– CF812 or CF–AS CJP Foam Sealant

B. Fill, Void or Cavity Material* –– Putty –– Min 1 in. (25 mm) thickness of putty applied within the annulus, flush with top surface of floor or with both surfaces of wall.
HILTI CONSTRUCTION CHEMICALS, DIV OF HILTI INC –– CP 618 Firestop Putty Stick

*Bearing the UL Classification Mark

THROUGH RATED WALL OR FLOOR PENETRATIONS (U.L. LISTINGS) (6)

SCALE: N.T.S.

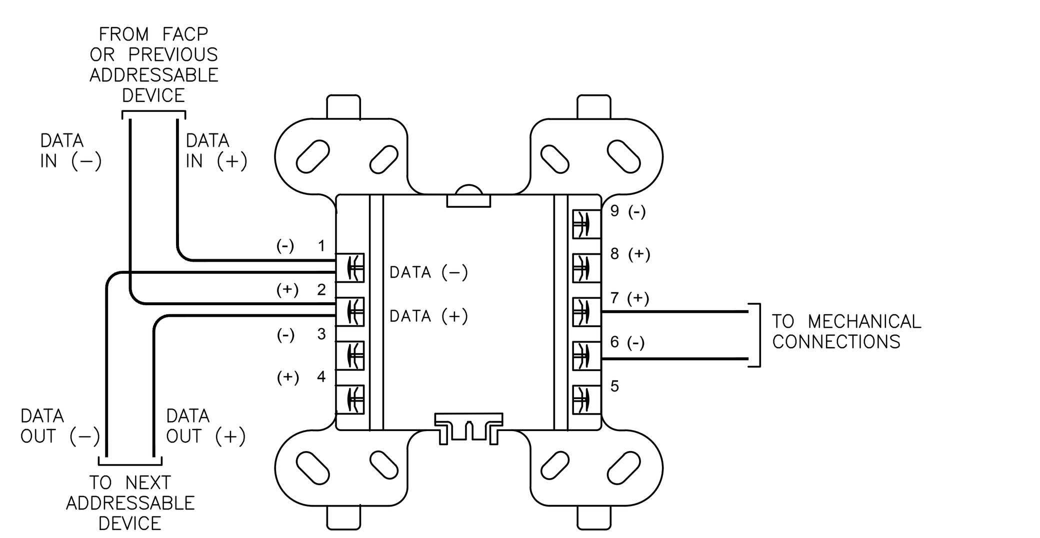

CONTROL MODULE WIRING

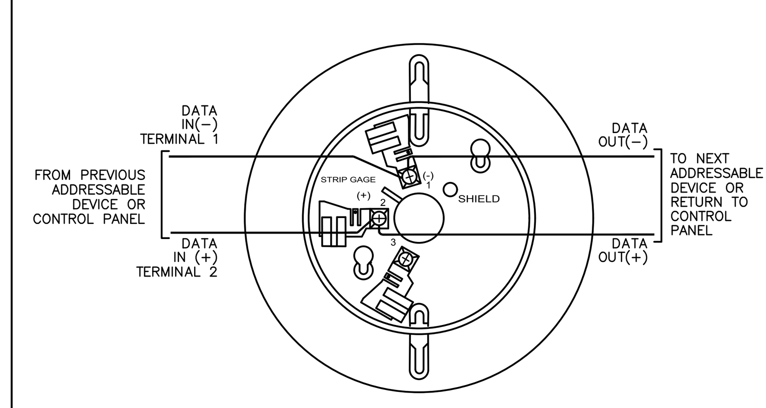

ADDRESSABLE SMOKE/HEAT DETECTOR

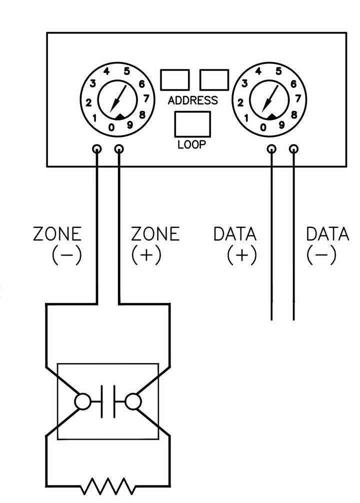

MANUAL PULL STATION

DEVICE WIRING DETAILS (3)

SCALE: N.T.S.

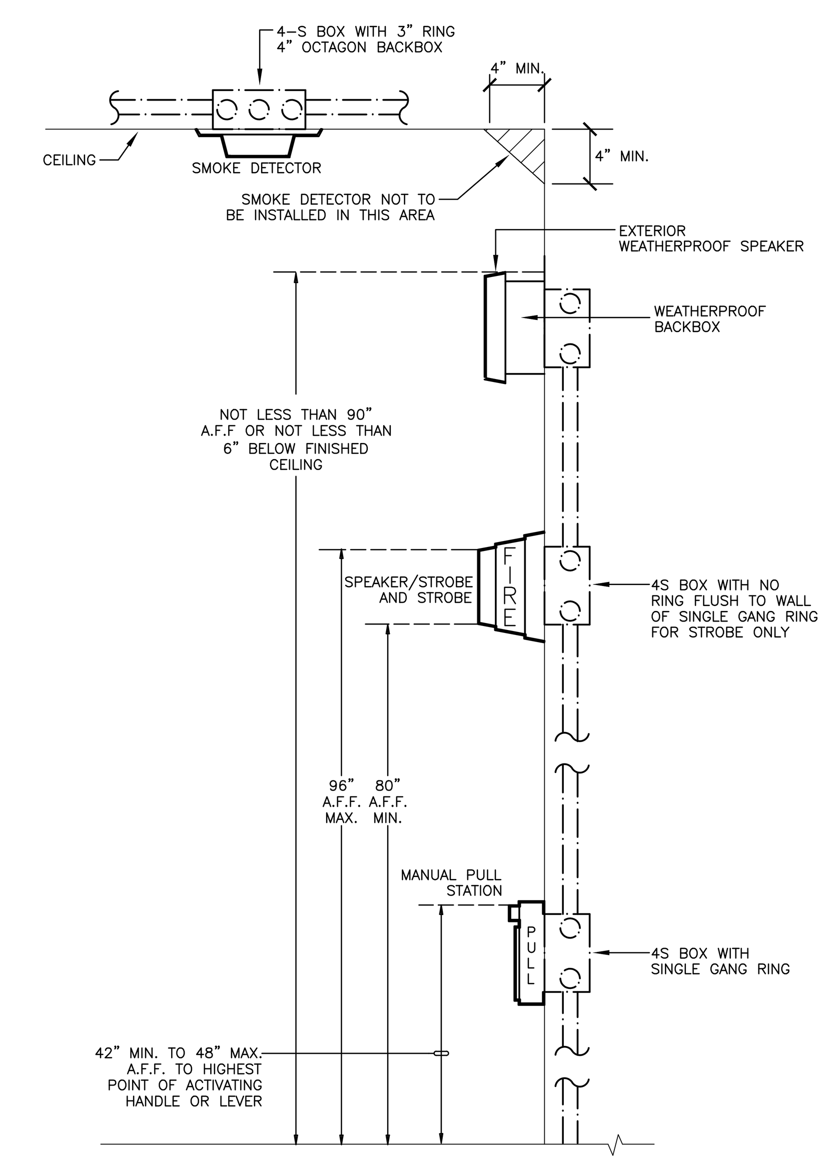

GENERAL NOTES:

1. THE ENTIRE LENS OF STROBE LIGHTS MUST BE BETWEEN 80" AND 96" ABOVE FLOOR FINISH. (NFPA 72, 18.5.5)
2. MANUAL FIRE ALARM BOXES SHALL BE INSTALLED IN ACCORDANCE WITH CFC, SECTIONS 907.4 THROUGH 907.5.
3. WHEN APPLICABLE, MANUAL FIRE ALARM BOXES SHALL BE LOCATED NOT MORE THAN 5 FEET FROM THE ENTRANCE TO EACH EXIT. ADDITIONAL MANUAL FIRE ALARM BOXES SHALL BE LOCATED SO THAT TRAVEL DISTANCE TO THE NEAREST BOX DOES NOT EXCEED 200 FEET. (CFC, 907.4.2.1)

MOUNTING HEIGHT DETAIL (1)

SCALE: N.T.S.

IDENTIFICATION STAMP
DIV. OF THE STATE ARCHITECT
APP: 01-120592 INC:
REVIEWED FOR
SS ☑ FLS ☑ ACS ☑
DATE: 7/11/2023

OWNER: San Rafael City Schools

PROJECT NAME: Venetia Valley School Middle School Restroom Addition

CLIENT ADDRESS: Enter address here

REGISTERED PROFESSIONAL ENGINEER
RAYMOND W. SWARTZ
No. 15610
Ex. 12/31/2023
ELECTRICAL
STATE OF CALIFORNIA

REVISIONS:

	DESCRIPTION	DATE
△		
△		
△		
△		
△		
△		
△		
△		
△		
△		
△		

PROJECT NO: Project Number
DATE ISSUED: Issue Date
SCALE: As indicated

EFA0.02

FIRE ALARM DETAILS

tk1sc COLLABORATIVE
11870 Pierce Street, Suite 160
Riverside, California 92505
951.299.4160 www.tk1sc.com

Project Leader - Bill Voller
Electrical Lead - Nikolas Bruno
tk1sc Job #: B2203109.000

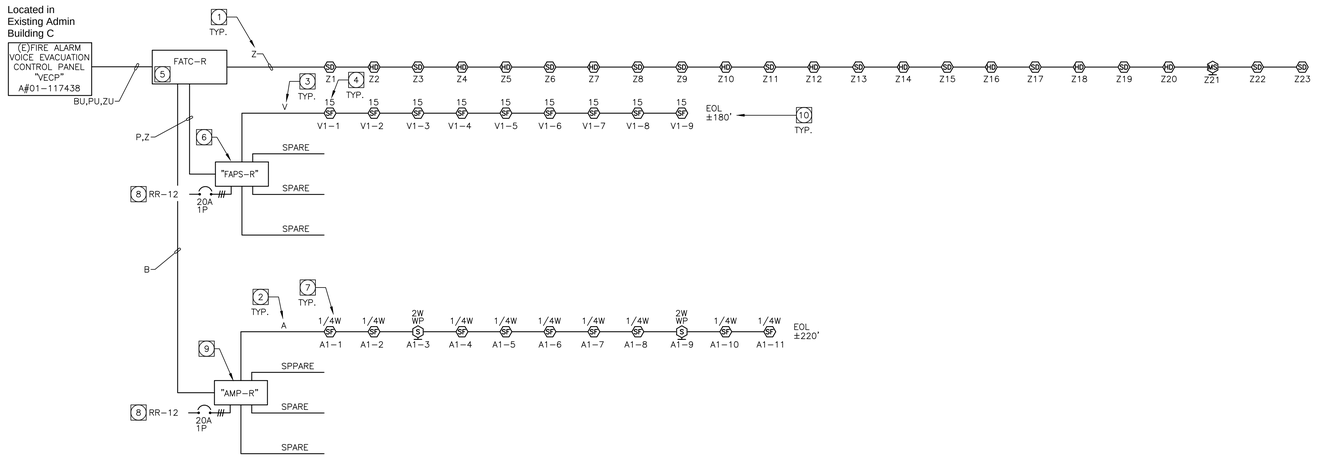

RISER DIAGRAM SPECIFIC NOTES:

1. 'Z' INDICATES ZONABLE/ADDRESSABLE CIRCUIT, PROVIDE 2#18 TWISTED PAIR PER CIRCUIT. SEE WIRE LEGEND FOR ADDITIONAL INFORMATION.
2. 'A' INDICATES AUDIBLE SPEAKER CIRCUIT, PROVIDE 2#16 TWISTED SHIELDED PAIR PER CIRCUIT. SEE WIRE LEGEND FOR ADDITIONAL INFORMATION.
3. 'V' INDICATES VISIBLE STROBE CIRCUIT, PROVIDE 2#12 PER CIRCUIT. SEE WIRE LEGEND FOR ADDITIONAL INFORMATION.
4. NUMBER INDICATES CANDELA RATING OF STROBE DEVICE.
5. FIRE ALARM TERMINAL CABINET (FATC), LETTER INDICATES BUILDING AREA CABINET IS LOCATED.
6. FIRE ALARM POWER SUPPLY (FAPS), PROVIDE DEDICATED 120V CIRCUIT WITH RED INDICATOR AND APPROVED LOCK-ON DEVICE PER PLANS.
7. INDICATES WATTAGE FOR SPEAKER.
8. PROVIDE 3/4"C. WITH 2#12, 1#12 GRD. TO 120V DEDICATED CIRCUIT FOR POWER. PROVIDE 20AMP, 1-POLE CIRCUIT BREAKER WITH APPROVED LOCK-ON DEVICE, RED INDICATOR AND IDENTIFIED AS "FIRE ALARM CONTROL CIRCUIT" (NFPA 72, SECTION 10.6.5.2). CONNECT AS REQUIRED. PROVIDE ALL REQUIRED MOUNTING HARDWARE. MATCH A.I.C. RATING OF DEVICES USED.
9. FIRE ALARM DIGITAL AUDIO AMPLIFIER (AMP). SEE SYMBOL LIST FOR ADDITIONAL INFORMATION.
10. INDICATES LENGTH OF WIRE IN FEET. SEE WIRING DIAGRAM FOR WIRE TYPES. SEE VOLTAGE DROP CALCULATIONS FOR PERCENT DROPPED AND ADDITIONAL INFORMATION.

BATTERY SIZING CALCULATION

PROJECT NAME: VENETIA VALLEY ES
PANEL LOCATION: RESTROOM
DATE PERFORMED: February 20, 2023

AMP-R

QTY.	DEVICE NAME	STD-BY (AMPS)		ALARM (AMPS)	
1	AUDIO AMPLIFIER	0.4000	0.4000	0.5500	0.5500
9	SPEAKER (1/4W)	0.0000	0.0000	0.0035	0.0315
	SPEAKER (1/2W)	0.0000	0.0000	0.0071	0.0000
	SPEAKER (1W)	0.0000	0.0000	0.0143	0.0000
2	WP SPEAKER (2W)	0.0000	0.0000	0.0283	0.0566
1	SYNC MODULE	0.0000	0.0000	0.0150	0.0150
		0.0000	0.0000	0.0000	0.0000
		0.0000	0.0000	0.0000	0.0000
		0.0000	0.0000	0.0000	0.0000
	TOTALS =		0.4000		0.6531

STAND-BY LOAD = 0.4000 ALARM LOAD = 0.6531 AMPS
STAND-BY TIME = 24 ALARM TIME = 15 / 60 HRS

STAND-BY = 9.6000 ALARM = 0.1633 AMP HRS

TOTAL = STAND-BY + ALARM
= 9.60 + 0.16
= 9.76 Ah (AMP HRS)
MULTIPLY BY DERATING FACTOR OF 1.25 = 12.20 Ah (AMP HRS)

MINIMUM BATTERY SIZE = 12.20 AMPERE HOURS
PROVIDE MIN. (2) 18AH 12VDC BATTERIES AS REQUIRED FOR 24VDC OPERATION

BATTERY SIZING CALCULATION

PROJECT NAME: VENETIA VALLEY ES
PANEL LOCATION: RESTROOM
DATE PERFORMED: February 22, 2023

FAPS-R

QTY.	DEVICE NAME	STD-BY (AMPS)		ALARM (AMPS)	
1	POWER SUPPLY	0.0900	0.0900	0.0900	0.0900
	15cd STROBE (WALL)	0.0000	0.0000	0.0660	0.0000
9	15cd STROBE (CEILING)	0.0000	0.0000	0.0660	0.5940
	30cd STROBE (CEILING)	0.0000	0.0000	0.0940	0.0000
	75cd STROBE (CEILING)	0.0000	0.0000	0.1580	0.0000
1	SYNC MODULE	0.0000	0.0000	0.0150	0.0150
		0.0000	0.0000	0.0000	0.0000
		0.0000	0.0000	0.0000	0.0000
		0.0000	0.0000	0.0000	0.0000
	TOTALS =		0.0900		0.6990

STAND-BY LOAD = 0.0900 ALARM LOAD = 0.6990 AMPS
STAND-BY TIME = 24 ALARM TIME = 15 / 60 HRS

STAND-BY = 2.1600 ALARM = 0.1748 AMP HRS

TOTAL = STAND-BY + ALARM
= 2.16 + 0.17
= 2.33 Ah (AMP HRS)
MULTIPLY BY DERATING FACTOR OF 1.25 = 2.92 Ah (AMP HRS)

MINIMUM BATTERY SIZE = 2.92 AMPERE HOURS
PROVIDE MIN. (2) 7AH 12VDC BATTERIES AS REQUIRED FOR 24VDC OPERATION

BATTERY SIZING CALCULATION

PROJECT NAME: VENETIA VALLEY ES
PANEL LOCATION: BUILDING D - ROOM D112 IDF
DATE PERFORMED: February 22, 2023

VECP

QTY.	DEVICE NAME	STD-BY (AMPS)		ALARM (AMPS)	
1	**EXISTING DEVICES**	1.6921	1.6921	4.0053	4.0053
		0.4000	0.0000	0.4000	0.0000
	NEW DEVICES	0.4400	0.0000	0.4400	0.0000
1	PULL STATION	0.0003	0.0003	0.0003	0.0003
12	SMOKE DETECTOR	0.0004	0.0048	0.0004	0.0048
10	HEAT DETECTOR (CEILING)	0.0003	0.0030	0.0003	0.0030
	ANNUNCIATOR	0.0750	0.0000	0.1000	0.0000
		0.0000	0.0000	0.0000	0.0000
		0.0000	0.0000	0.0000	0.0000
		0.0000	0.0000	0.0000	0.0000
	TOTALS =		1.7002		4.0134

STAND-BY LOAD = 1.7002 ALARM LOAD = 4.0134 AMPS
STAND-BY TIME = 24 ALARM TIME = 15 / 60 HRS

STAND-BY = 40.8048 ALARM = 1.0034 AMP HRS

TOTAL = STAND-BY + ALARM
= 40.80 + 1.00
= 41.81 Ah (AMP HRS)
MULTIPLY BY DERATING FACTOR OF 1.25 = 52.26 Ah (AMP HRS)

MINIMUM BATTERY SIZE = 52.26 AMPERE HOURS
PROVIDE MIN. (2) 55AH 12VDC BATTERIES AS REQUIRED FOR 24VDC OPERATION

VOLTAGE DROP CALCULATIONS
VENETIA VALLEY ES

DEVICE	UL MAX. CURRENT AMPS	NO	VISUAL CIRCUIT V1	NO	VISUAL CIRCUIT SPARE	NO	VISUAL CIRCUIT SPARE	NO	VISUAL CIRCUIT SPARE
STROBE (CEILING) 15 CD	0.060	10	0.600		0.000		0.000		0.000
STROBE (CEILING) 30 CD	0.086		0.000		0.000		0.000		0.000
STROBE (CEILING) 75 CD	0.142		0.000		0.000		0.000		0.000
TOTAL CURRENT ON CIRCUIT			0.600 AMPS		0.000 AMPS		0.000 AMPS		0.000 AMPS
TOTAL WIRE LENGTH IN FEET			190						
% VOLTAGE DROP			**1.85**		**0.00**		**0.00**		**0.00**
WIRE SIZE			#12		#12		#12		#12
CIRCUIT LOCATION			FAPS-R		FAPS-R		FAPS-R		FAPS-R
VOLTS DROPPED			**0.38**		**0.00**		**0.00**		**0.00**

VOLTAGE DROP CALCULATIONS
VENETIA VALLEY ES

DEVICE	UL MAX. CURRENT AMPS	NO	AUDIBLE CIRCUIT A1	NO	AUDIBLE CIRCUIT SPARE	NO	AUDIBLE CIRCUIT SPARE	NO	AUDIBLE CIRCUIT SPARE
SPEAKER 1/4W (INTERIOR)	0.004	5	0.020		0.000		0.000		0.000
SPEAKER 1/2W (INTERIOR)	0.007		0.000		0.000		0.000		0.000
SPEAKER 1W (INTERIOR)	0.014		0.000		0.000		0.000		0.000
WP SPEAKER 2W (EXTERIOR	0.028	2	0.056		0.000		0.000		0.000
TOTAL CURRENT ON CIRCUIT			0.076 AMPS		0.000 AMPS		0.000 AMPS		0.000 AMPS
TOTAL WIRE LENGTH IN FEET			230						
% VOLTAGE DROP			**0.72**		**0.00**		**0.00**		**0.00**
WIRE SIZE			#16		#16		#16		#16
CIRCUIT LOCATION			AMP-R		AMP-R		AMP-R		AMP-R
VOLTS DROPPED			**0.15**		**0.00**		**0.00**		**0.00**

VOLTAGE DROP CALCULATIONS GENERAL NOTES:

1. THE LISTED MANUFACTURER OPERATING VOLTAGE RANGE FOR EQUIPMENT AND DEVICES ARE AS FOLLOWS:

   DEVICES = 16 – 33 VDC (STROBES), 70.7 VDC (SPEAKERS)
   EQUIPMENT = +24VDC FILTERED, REGULATED
   BATTERY = 20.4 VDC END OF USEFUL LIFE (85%) PER NFPA 72 HANDBOOK AND UL 864.

2. VOLTAGE DROP PERCENT FORMULA:

$$\left(\frac{\text{WIRE LENGTH x TOTAL CURRENT AMPS x 21.6}}{\text{CIRCULAR MILS}}\right) = \text{VOLTS DROPPED}$$

$$\left(\frac{\text{VOLTS DROPPED X 100}}{20.4}\right) = \%\ \text{VOLTS DROPPED}$$

VOLTS DROPPED – 20.4 = OPERATING VOLTAGE

21.6 = CONSTANT (RESISTANCE OF CONDUCTOR)
CIRCULAR MILS:
#12AWG = 6530 #16AWG = 2580
#14AWG = 4110 #18AWG = 1620

FIRE ALARM GENERAL NOTES:

1. NOTIFICATION DEVICES IN ROOMS CONTAINING (2) OR MORE AUDIBLE AND/OR (2) OR MORE VISUAL DEVICES SHALL BE SYNCHRONIZED PER N.F.P.A. 72, 2016 EDITION (WITH CALIFORNIA AMENDMENTS) THIS SHALL INCLUDE AUDIBLE AND VISUAL DEVICES LOCATED IN ADJACENT/ADJOINING SPACES.
2. DO NOT DEVIATE FROM CONDUIT RUNS AS SHOWN ON FLOOR PLANS WITHOUT PRIOR APPROVAL FROM SYSTEM SUPPLIER / ENGINEER. FACTORS SUCH AS EXCESSIVE VOLTAGE DROP, ADDITIONAL PARTS, ENGINEERING, ETC. THAT ARE A RESULT OF CONDUIT RUN DEVIATIONS SHALL BE THE SOLE RESPONSIBILITY OF THE CONTRACTOR.
3. DETECTORS SHALL NOT BE LOCATED IN A DIRECT AIR-FLOW, NOR CLOSER THAN 3 FEET (915 mm) FROM ANY AIR SUPPLY DIFFUSER.
4. THE AUDIBLE ALARM NOTIFICATION APPLIANCES SHALL PROVIDE A SOUND PRESSURE LEVEL OF 15 dBA ABOVE THE AVERAGE AMBIENT SOUND LEVEL OR 5 dBA ABOVE THE MAXIMUM SOUND LEVEL HAVING DURATION OF AT LEAST 60 SECONDS, WHICH IS GREATER, IN EVERY OCCUPIED SPACE WITHIN THE BUILDING. THE MINIMUM SOUND PRESSURE LEVEL SHALL BE 60 dBA PER CFC 907.10.2.
5. THE EXISTING CAMPUS FIRE ALARM SYSTEM SHALL BE MAINTAINED AND OPERATIONAL AT ALL TIMES DURING ALTERATIONS AND CONSTRUCTION. WHEN PORTIONS OF THE SYSTEM REQUIRE ALTERATIONS, THE REMAINDER OF THE SYSTEM SHALL BE KEPT IN SERVICE. IF NECESSARY TO SHUT DOWN ENTIRE FIRE ALARM SYSTEM, CONTRACTOR SHALL PROVIDE A FIRE WATCH FOR ALL OCCUPIED AREAS OF WORK WHERE THE REQUIRED FIRE ALARM SYSTEM IS OUT OF SERVICE FOR THE DURATION OF THE SYSTEM OUTAGE. FIRE WATCH AND SYSTEM/EQUIPMENT IDENTIFICATIONS SHALL BE PER 2016 CFC 901.7. LOCAL FIRE AUTHORITY SHALL BE NOTIFIED 48 HOURS IN ADVANCE OF ANY SHUT DOWN.
6. EMERGENCY VOICE/ALARM COMMUNICATION SYSTEMS SHALL BE DESIGNED AND INSTALLED IN ACCORDANCE WITH NFPA 72. THE OPERATION OF ANY AUTOMATIC FIRE DETECTOR, SPRINKLER WATERFLOW DEVICE OR MANUAL FIRE ALARM BOX SHALL AUTOMATICALLY SOUND AN ALERT TONE FOLLOWED BY VOICE INSTRUCTIONS GIVING APPROVED INFORMATION AND DIRECTIONS FOR A GENERAL OR STAGED EVACUATION IN ACCORDANCE WITH THE FIRE SAFETY EVACUATION PLANS REQUIRED BY SECTION 404 PER CBC/CFC 907.5.2.2
7. EMERGENCY VOICE/ALARM COMMUNICATION SYSTEMS SHALL HAVE THE CAPABILITY TO BROADCAST LIVE VOICE MESSAGES BY PAGING ZONES ON A SELECTIVE AND ALL-CALL BASIS PER CBC/CFC 907.5.2.2.2.
8. EMERGENCY VOICE/ALARM COMMUNICATION SYSTEMS SHALL BE PROVIDED WITH AN APPROVED EMERGENCY POWER SOURCE PER CBC/CFC 907.5.2.2.5.
9. NEW BATTERIES SHALL BE MARKED WITH MONTH AND YEAR OF MANUFACTURER PER NFPA 72 10.6.10.1.1

COMPLETE FIRE
ALARM SUBMITTAL
AUTOMATIC ADDRESSABLE
FIRE ALARM SYSTEM
WITH EMERGENCY VOICE/ALARM
COMMUNICATION SYSTEM

IDENTIFICATION STAMP
DIV. OF THE STATE ARCHITECT
APP: 01-120592 INC:
REVIEWED FOR
SS ☑ FLS ☑ ACS ☑
DATE: 7/11/2023

OWNER: San Rafael City Schools

PROJECT NAME: Venetia Valley School Middle School Restroom Addition

CLIENT ADDRESS: Enter address here

REGISTERED PROFESSIONAL ENGINEER
RAYMOND W. SINNETT
No. E 15610
Exp. 12/31/2023
ELECTRICAL
STATE OF CALIFORNIA

REVISIONS:

	DESCRIPTION	DATE
1		
2		
3		
4		
5		
6		
7		
8		
9		
10		

PROJECT NO: Project Number
DATE ISSUED: Issue Date
SCALE: As indicated

EFA0.03
FIRE ALARM RISER DIAGRAM AND CALCULATIONS

tk1sc COLLABORATIVE
11870 Pierce Street, Suite 160
Riverside, California 92505
951.299.4160 www.tk1sc.com

Project Leader - Bill Voller
Electrical Lead - Nikolas Bruno
tk1sc Job #: B2203109.000

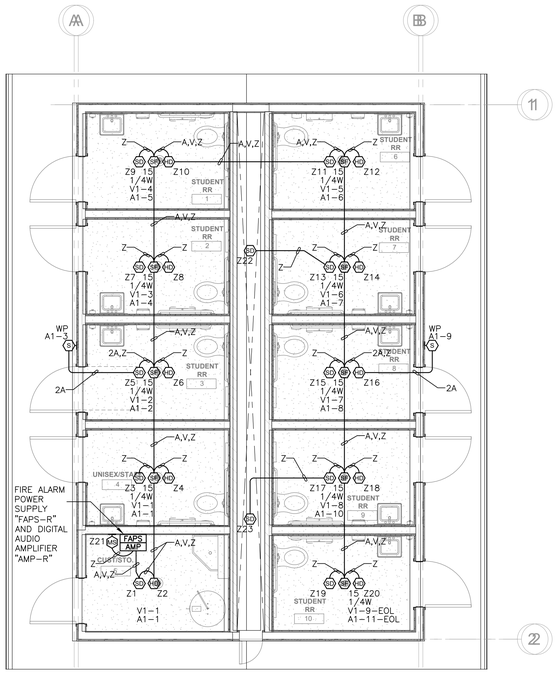

MS RESTROOM FIRE ALARM PLAN | 1/4" = 1'-0" | **1**

1. NOTIFICATION DEVICES IN ROOMS CONTAINING (2) OR MORE AUDIBLE AND/OR (2) OR MORE VISUAL DEVICES SHALL BE SYNCHRONIZED PER NFPA 72. THIS SHALL INCLUDE AUDIBLE AND VISUAL DEVICES LOCATED IN ADJACENT/ADJOINING SPACES.
2. DO NOT DEVIATE FROM CONDUIT RUNS AS SHOWN ON FLOOR PLANS WITHOUT PRIOR APPROVAL FROM SYSTEM SUPPLIER / ENGINEER. FACTORS SUCH AS EXCESSIVE VOLTAGE DROP, ADDITONAL PARTS, ENGINEERING, ETC. THAT ARE A RESULT OF CONDUIT RUN DEVIATIONS SHALL BE THE SOLE RESPONSIBILITY OF THE CONTRACTOR.
3. DETECTORS SHALL NOT BE LOCATED IN A DIRECT AIR-FLOW, NOR CLOSER THAN 3 FEET (915 mm) FROM ANY AIR SUPPLY DIFFUSER.
4. THE AUDIBLE ALARM NOTIFICATION APPLIANCES SHALL PROVIDE A SOUND PRESSURE LEVEL OF 15 dBA ABOVE THE AVERAGE AMBIENT SOUND LEVEL OR 5 dBA ABOVE THE MAXIMUM SOUND LEVEL HAVING DURATION OF AT LEAST 60 SECONDS, WHICHEVER IS GREATER, IN EVERY OCCUPIED SPACE WITHIN THE BUILDING PER CFC SECTION 907.5.2.1.1. THE MINIMUM SOUND PRESSURE LEVEL SHALL BE 60 dBA PER NFPA 72, TABLE A.18.4.3.
5. THE VOICE/ALARM COMMUNICATION SYSTEM VOICE MESSAGE SHALL COMPLY WITH NFPA 72, SECTIONS 18.4 AND 24.4 FOR GENERAL REQUIREMENTS, INTELLIGIBILITY, AUDIBILITY, MESSAGE PRIORTY, TONES, ETC.
6. REFER TO ARCHITECTURAL EXTERIOR ELEVATIONS FOR PRECISE OUTLET LOCATIONS.
7. REFER TO ARCHITECTURAL REFLECTED CEILING PLAN FOR EXACT LOCATION OF ALL CEILING MOUNTED DEVICES.
8. IF SHIELDED WIRE IS USED, THE FOLLOWING MUST BE OBSERVED.
   A. METALLIC CONTINUITY OF THE SHIELD MUST BE MAINTAINED AND INSULATED THROUGHOUT THE ENTIRE LENGTH OF THE CABLE.
   B. THE ENTIRE LENGTH OF THE CABLE MUST HAVE A RESISTANCE GREATER THAN 1 MEGOHM TO EARTH.
9. ALL PENETRATIONS THROUGH FIRE RATED WALLS SHALL BE PROTECTED FROM THE SPREAD OF FIRE WITH AN APPROVED FIRE STOP SYSTEM EQUAL TO OR GREATER THAN THE FIRE RATING OF THE STRUCTURE / SURFACE BEING PENETRATED AS IDENTIFIED IN CBC CHAPTER 7, UL OR OTHER LAB TESTING CRITERIA. APPROVED TYPES OF MATERIALS SHALL BE IDENTIFIED WITHIN THE FIRE ALARM SECTION OF THE PROJECT SPECIFICATIONS.
10. A SYSTEM GROUND MUST BE PROVIDED FOR EARTH DETECTION AND LIGHTNING PROTECTION DEVICES. THIS CONNECTION SHALL BE MADE TO AN APPROVED DEDICATED EARTH CONNECTION PER CEC, ARTICLE 250.
11. WIRING IN DUCTS, PLENUMS AND OTHER AIR HANDLING SPACES MUST BE INSTALLED IN ACCORDANCE WITH CEC.
12. UNDERGROUND WIRING MUST BE FREE OF ALL WATER.
13. ALL FIRE ALARM SYSTEM CONDUCTORS SHALL BE RUN IN A DEDICATED FIRE ALARM CONDUIT SYSTEM.
14. WHERE A DETECTOR IS INDICATED TO BE INSTALLED ABOVE THE CEILING AND NO ACCESS TO THE CEILING SPACE EXISTS, THE ELECTRICAL CONTRACTOR SHALL FURNISH ACCESS PANELS. THE DETECTOR SHALL BE EASILY ACCESSIBLE AND THE LOCATION OF THE DETECTOR SHALL BE CLEARLY MARKED.
15. FIRE ALARM SYSTEM UTILIZES A COMPLETE COVERAGE, FULLY AUTOMATIC SYSTEM. PROVIDE RELAY MODULE(S) AT FATC/FACP LOCATIONS FOR CONTROL OF HVAC SHUT DOWN, SMOKE/FIRE DAMPER CLOSURE AND DOOR HOLD RELEASES.
16. WHERE NEW DEVICES (AND ASSOCIATED CONDUIT) CANNOT PHYSICALLY BE MOUNTED CONCEALED IN WALLS, RUN IN PANDUIT SURFACE RACEWAY/WIREWAY (AND DEVICES SHALL BE MOUNTED ON SURFACE OUTLET BOXES). REFER TO SPECIFICATIONS. PROVIDE SIZE OF RACEWAY TO ACCOMMODATE THE REQUIRED CONDUCTORS. WHERE CONDUIT IS INDICATED, PROVIDE SURFACE RACEWAY WITH AN EQUAL CROSS SECTION TO THE DIAMETER OF THE CONDUIT INDICATED.
17. DETECTOR SENSITIVITY SHALL BE TESTED USING MANUFACTURER'S CALIBRATED SENSITIVITY INSTRUMENT OR OTHER CALIBRATED TESTING METHOD. (CFC, SECTIONS 907.8.3 AND 907.8.4)
18. THE VOICE/ALARM COMMUNICATION SYSTEM VOICE MESSAGE SHALL COMPLY WITH NFPA 72 SECTIONS 18.4 AND 24.4 FOR GENERAL REQUIREMENTS, INTELLIGIBILITY, AUDIBILITY, MESSAGE PRIORITY, TONES, ETC. REFER TO NFPA 72 ANNEX D, D.1 THROUGH D.6 FOR DETERMINING THE FUNDAMENTALS OF TEST PROTOCOL AND METHOD OF MEASURING INTELLIGIBILITY.

COMPLETE FIRE ALARM SUBMITTAL

AUTOMATIC ADDRESSABLE FIRE ALARM SYSTEM WITH EMERGENCY VOICE/ALARM COMMUNICATION SYSTEM

IDENTIFICATION STAMP
DIV. OF THE STATE ARCHITECT
APP: 01-120592 INC:
REVIEWED FOR
SS ☑ FLS ☑ ACS ☑
DATE: 7/11/2023

OWNER: San Rafael City Schools

PROJECT NAME: Venetia Valley School Middle School Restroom Addition

CLIENT ADDRESS: Enter address here

REVISIONS:

	DESCRIPTION	DATE
1		
2		
3		
4		
5		
6		
7		
8		
9		
10		
11		

PROJECT NO:	Project Number
DATE ISSUED:	Issue Date
SCALE:	As indicated

EFA1.01

FIRE ALARM FLOOR PLAN

tk1sc COLLABORATIVE
11870 Pierce Street, Suite 160
Riverside, California 92505
951.299.4160 www.tk1sc.com
Project Leader - Bill Voller
Electrical Lead - Michael Barrera
tk1sc Job #: B2203109.000

CALIFORNIA GREEN BUILDING STANDARD TABLE 5.303.3 STANDARDS FOR PLUMBING FIXTURES AND FIXTURE FITTINGS

REQUIRED STANDARDS

WATER CLOSETS (TOILETS) – FLUSHOMETER VALVE TYPE SINGLE FLUSH, MAXIMUM FLUSH VOLUME	ASME A 112.19.2/ CSA B45.1 – 1.28 GAL (4.8 L)
WATER CLOSETS (TOILETS) – FLUSHOMETER VALVE TYPE DUAL FLUSH, MAXIMUM FLUSH VOLUME	ASME A 112.19.14 AND USEPA WATERSENSE TANK – TYPE HIGH-EFFICIENCY TOILET SPECIFICATION – 1.28 GAL (4.8 L)
URINALS, MAXIMUM FLUSH VOLUME	ASME A 112.19.2/ CSA B45.1 – 0.5 GAL (1.9 L)
PUBLIC LAVATORY FAUCETS: MAXIMUM FLOW RATE – 0.5 GPM (1.9 L/ MIN)	ASME A 112.18.1/ CSA B125.1
PUBLIC METERING SELF-CLOSING FAUCETS: MAXIMUM WATER USE – 0.20 GAL (1.0 L) PER METERING CYCLE	ASME A 112.18.1/ CSA B125.1
SHOWERHEADS MAXIMUM FLOW RATE – 2.0 GPM	ENERGY POLICY ACT OF 1992 ASME A112.18.1 / CSA B125.1

NOTE:
PROVIDE DOMESTIC COLD WATER SUB-METER AT BOTH BLDG D & E TO MONITOR USAGE.
ALSO REFERENCED IN SPECIFICATION SECTION 22 40 00 – PART 1, 1.1.C.

APPLICABLE CODES

2022 CALIFORNIA BUILDING CODE (CBC: PART 2 , TITLE 24 , CCR)
(BASED ON 2021 INTERNATIONAL BUILDING CODE)

2022 CALIFORNIA ELECTRICAL CODE (CEC: PART 3 , TITLE 24 , CCR)
(BASED ON 2020 NATIONAL ELECTRICAL CODE)

2022 CALIFORNIA MECHANICAL CODE (CMC: PART 4 , TITLE 24 , CCR)
(BASED ON 2021 UNIFORM MECHANICAL CODE)

2022 CALIFORNIA PLUMBING CODE (CPC: PART 5 , TITLE 24 , CCR)
(BASED ON 2021 UNIFORM PLUMBING CODE)

2022 CALIFORNIA FIRE CODE (CFC: PART 9, TITLE 24, CCR.)
(BASED ON 2021 INTERNATIONAL FIRE CODE)

2022 CALIFORNIA ENERGY CODE.

2022 CALIFORNIA GREEN BUILDING CODE.

ANCHORAGE & BRACING NOTES

2019 CBC
EFFECTIVE 2/5/20

MEP COMPONENT ANCHORAGE NOTE:

ALL MECHANICAL, PLUMBING AND ELECTRICAL COMPONENTS SHALL BE ANCHORED AND INSTALLED PER THE DETAILS ON THE DSA APPROVED CONSTRUCTION DOCUMENTS. THE FOLLOWING COMPONENTS SHALL BE ANCHORED OR BRACED TO MEET THE FORCE AND DISPLACEMENT REQUIREMENTS PRESCRIBED IN THE 2019 CBC, SECTIONS 1617A.1.18 THROUGH 1617A.1.26 AND ASCE 7-16 CHAPTERS 13, 26 AND 30.

1. ALL PERMANENT EQUIPMENT AND COMPONENTS.
2. TEMPORARY OR MOVABLE EQUIPMENT THAT IS PERMANENTLY ATTACHED (E.G. HARDWIRED) TO THE BUILDING UTILITY SERVICES SUCH AS ELECTRICITY, GAS OR WATER, "PERMANENTLY ATTACHED" SHALL INCLUDE ALL ELECTRICAL CONNECTIONS EXCEPT FOR DUPLEX RECEPTACLES.
3. MOVABLE WHICH IS STATIONED IN ONE PLACE FOR MORE THAN 8 HOURS HEAVIER THAN 400 POUNDS OR HAS A CENTER OF MASS LOCATED 4 FEET OR MORE ABOVE THE ADJACENT FLOOR OR ROOF LEVEL THAT DIRECTLY SUPPORT THE COMPONENT ARE REQUIRED TO BE ANCHORED WITH TEMPORARY ATTACHMENTS.

THE FOLLOWING MECHANICAL AND ELECTRICAL COMPONENTS SHALL BE POSITIVELY ATTACHED TO THE STRUCTURE BUT NEED NOT DEMONSTRATE DESIGN COMPLIANCE WITH REFERENCES NOTED ABOVE. THESE COMPONENTS SHALL HAVE FLEXIBLE CONNECTIONS PROVIDED BETWEEN THE COMPONENT AND ASSOCIATED DUCTWORK, PIPING, AND CONDUIT. FLEXIBLE CONNECTIONS MUST ALLOW MOVEMENT IN BOTH TRANSVERSE AND LONGITUDINAL DIRECTIONS.

A. COMPONENTS WEIGHING LESS THAN 400 POUNDS AND HAVE A CENTER OF MASS LOCATED 4 FEET OR LESS ABOVE THE ADJACENT FLOOR OR ROOF LEVEL THAT DIRECTLY SUPPORT THE COMPONENT.

B. COMPONENTS WEIGHING LESS THAN 20 POUNDS, OR IN THE CASE OF DISTRIBUTED SYSTEMS, LESS THAN 5 POUNDS PER FOOT, WHICH ARE SUSPENDED FROM A ROOF OR FLOOR OR HUNG FROM A WALL.

THE ANCHORAGE OF ALL MECHANICAL, ELECTRICAL AND PLUMBING COMPONENTS SHALL BE SUBJECT TO THE APPROVAL OF THE DESIGN PROFESSIONAL IN GENERAL RESPONSIBLE CHANGE OR STRUCTURAL ENGINEER DELEGATED RESPONSIBILITY AND ACCEPTANCE BY DSA. THE PROJECT INSPECTOR WILL VERIFY THAT ALL COMPONENTS AND EQUIPMENT HAVE BEEN ANCHORED IN ACCORDANCE WITH ABOVE REQUIREMENTS.

PIPING, DUCTWORK AND ELECTRICAL DISTRIBUTION SYSTEM BRACING NOTE:

PIPING, DUCTWORK, AND ELECTRICAL DISTRIBUTION SYSTEMS SHALL BE BRACED TO COMPLY WITH THE FORCES AND DISPLACEMENTS PRESCRIBED IN ASCE 7-10 SECTION 13.3 AS DEFINED IN ASCE 7-10 SECTIONS 13.6.5.6, 13.6.7, AND 13.6.8; AND 2019 CBC, SECTIONS 1616A.1.24, 1616A.1.25 AND 1616A.1.26.

THE METHOD OF SHOWING BRACING AND ATTACHMENTS TO THE STRUCTURE FOR THE IDENTIFIED DISTRIBUTION SYSTEM ARE AS NOTED BELOW. WHEN BRACING AND ATTACHMENTS ARE BASED ON A PRE-APPROVED INSTALLATION GUIDE (E.G., SMACNA, OR OSHPD OPM FOR 2013 CBC OR LATER), COPIES OF THE BRACING SYSTEM INSTALLATION GUIDE OR MANUAL SHALL BE AVAILABLE ON THE JOBSITE PRIOR TO THE START OF AND DURING THE HANGING AND BRACING OF THE DISTRIBUTION SYSTEMS. THE STRUCTURAL ENGINEER OF RECORD SHALL VERIFY THE ADEQUACY OF THE STRUCTURE TO SUPPORT THE HANGER AND BRACE LOADS.

MECHANICAL PIPING (MP), MECHANICAL DUCTS (MD), PLUMBING PIPING (PP), ELECTRICAL DISTRIBUTION SYSTEMS (E):
MP ☐ MD ☐ PP ☐ E ☐ OPTION 1: DETAILED ON THE APPROVED DRAWINGS WITH PROJECT SPECIFIC NOTES AND DETAILS.

MP ☐ MD ☐ PP ☒ E ☐ OPTION 2: SHALL COMPLY WITH THE APPLICABLE OSHPD PRE-APPROVAL (OPM #-0052-13)

PIPING MATERIALS

1. SANITARY SEWER , VENT AND STORM DRAIN PIPING BELOW GROUND :	SERVICE WEIGHT NO-HUB CAST IRON PIPE & FITTINGS CONFORMING TO THE REQUIREMENTS CISPI STANDARD 301, ASTM A 888 OR ASTM A74 WITH TYPE 304 STAINLESS STEEL HEAVY DUTY NO-HUB COUPLINGS. PROVIDE PIPE WRAP ON ALL UNDERGROUND PIPING IN ACCORDANCE WITH ANSI/AWWA STANDARDS C105 /A21.5-93. BED AND BACKFILL WITH CLEAN SAND, 6" THICK ALL AROUND PIPE.
2. SOIL , WASTE VENT , STORM DRAIN PIPING ABOVE GROUND :	SERVICE WEIGHT NO-HUB CAST IRON PIPE & FITTINGS CONFORMING TO THE REQUIREMENTS OF CISPI STANDARD 301, ASTM A888 OR ASTM A74 WITH TYPE 304 STAINLESS STEEL STANDARD DUTY NO-HUB COUPLINGS.
3. WATER PIPING BELOW GROUND :	TYPE 'K' COPPER WITH BRAZED JOINTS.
4. WATER PIPING ABOVE GROUND :	TYPE 'L' COPPER WITH LEAD-FREE SOLDERED JOINTS.
5. GAS PIPING :	SCHEDULE 40 BLACK STEEL WITH MALLEABLE IRON SCREWED OR WELDED JOINTS.
6. GAS PIPING BELOW GROUND:	DRISCOPLEX PE2406 POLYETHYLENE PIPING SYSTEMS WITH ELECTRIC FUSION SOCKET JOINTS. PROVIDE #12 ELECTRIC TRACER COPPER WIRE, SPIRAL WRAPPED AROUND PIPE. UNDERGROUND STEEL PIPING AND FITTINGS SHALL BE AS FOR ABOVE GROUND. PIPING SHALL BE WRAPPED AND CATHODICALLY PROTECTED PER THE SOILS ENGINEER DIRECTION.
7. CONDENSATE DRAIN PIPING :	TYPE 'M' COPPER WITH SOLDERED JOINTS.
8. INSULATION OF DOMESTIC HOT WATER SUPPLY AND HOT WATER RETURN PIPING :	GLASS FIBER PIPE INSULATION WITH FACTORY APPLIED WHITE JACKET, J-M MICRO-LOK 650AP, 1" THICK FOR PIPE SIZES OF 1/2" TO 1"., AND 1 1/2" THICK FOR PIPE SIZES TO 1 1/4" AND LARGER. INSULATE FITTINGS AND VALVES W/ PREFORMED INSULATION WITH PVC PREMOLDED ONE PIECE FITTING COVER BY J.M. ZESTON. ADHERE LONGITUDINAL LAPS AND BUTTS OF STRIPS OF JACKET W/ FACTORY APPLIED PRESSURE SENSITIVE TAPE SYSTEM, J-M AP-T. FLANGES AND UNIONS SHALL NOT BE COVERED.
9. INSULATION OF INTERIOR CONDENSATE DRAIN PIPING :	AP ARMFLEX CLOSED-CELL ELASTOMERIC FOAM INSULATION. FLAME-SPREAD INDEX OF 25 OR LESS AND SMOKE-DEVELOPED INDEX OF 50 OR LESS. 1/2 INCH THICK FOR 4 INCH DIAMETER PIPE AND LESS.
10. RECYCLED WATER PIPING:	PURPLE PVC PIPE WITH MANUFACTURING-STENCILED, COLOR PANTONE 522C, STENCILED IN BLACK. SHALL BEAR THE WORDS "CAUTION: RECYCLED WATER – DO NOT DRINK" STENCILED IN 2" BLACK LETTERS ON BOTH SIDES OF THE PIPE.

11. ALL OF THE ABOVE SHALL COMPLY WITH THE SPECIFICATIONS.

NOTE:
ALL PIPE, FITTINGS, FIXTURES, ETC. THAT CONTACT POTABLE WATER FOR HUMAN CONSUMPTION SHALL SHOW APPROVAL TO NSF 61, ANNEX "G". EFFECTIVE JANUARY 1, 2010, THE LEAD CONTENT OF THE WETTED SURFACE AREA OF THE PIPES, FITTINGS AND FIXTURES CONVEYING POTABLE WATER FOR HUMAN CONSUMPTION, OF NOT MORE THAN 0.25%, SHALL BE DETERMINED PURSUANT TO A PRESCRIBED FORMULA AS DETERMINED BY THIRD PARTY CERTIFIERS TO NSF STANDARD 61, ANNEX "G". REFERENCE SECTION 604.10, CALIFORNIA PLUMBING CODE, 2010 EDITION, AND HEALTH & SAFETY CODE SECTION 116875.

TITLE 24 MANDATORY MEASURES

APPLICABLE	
	EQUIPMENT AND SYSTEMS EFFICIENCY
☒	ANY APPLIANCE FOR WHICH THERE IS A CALIFORNIA STANDARD ESTABLISHED IN THE APPLIANCE EFFICIENCY STANDARDS MAY BE INSTALLED ONLY IF THE MANUFACTURER HAS CERTIFIED THAT THE COMMISSION, AS SPECIFIED IN THOSE REGULATIONS , THAT THE APPLIANCE COMPLIES WITH THE APPLICABLE STANDARD FOR THAT APPLIANCE .
☒	PIPING SYSTEMS SHALL BE INSULATED IN ACCORDANCE WITH REQUIREMENTS OF THE TITLE 24 STANDARDS AND ALL CODES HAVING THE JURISDICTION .
	SERVICE WATER HEATING SYSTEMS
☐	THE FOLLOWING SERVICE WATER HEATING SYSTEMS AND EQUIPMENT MAY BE INSTALLED ONLY IF THE MANUFACTURER HAS CERTIFIED THAT THE EQUIPMENT MEETS OR EXCEEDS ALL APPLICABLE EFFICIENCY REQUIREMENTS LISTED IN 113 OF THE ENERGY EFFICIENCY STANDARDS : GAS-FIRED NON-STORAGE TYPES >200,000 BTU/HR .
☐	UNFIRED SERVICE WATER HEATER STORAGE TANKS AND BACKUP TANKS FOR SOLAR WATER HEATING SYSTEMS SHALL HAVE EITHER : EXTERNAL INSULATION WITH AN INSTALLED R-VALUE OF AT LEAST R-12 , INTERNAL AND EXTERNAL INSULATION WITH A COMBINED R-VALUE OF AT LEAST R-16 , OR SUFFICIENT INSULATION SO THAT THE HEAT LOSS OF THE TANK SURFACE BASED ON AN 80° F WATER-AIR TEMPERATURE DIFFERENCE SHALL SHALL BE LESS THAN 6.5 BTU / HR / SF .
☒	IF A CIRCULATING HOT WATER SYSTEM IS INSTALLED , IT SHALL HAVE A CONTROL CAPABLE OF AUTOMATICALLY TURNING OFF THE CIRCULATING PUMP(S) WHEN HOT WATER IS NOT REQUIRED .
☒	LAVATORIES IN RESTROOMS OF PUBLIC FACILITIES SHALL BE EQUIPPED WITH:
☒	OUTLET DEVICES THAT LIMIT THE FLOW OF HOT WATER TO A MAXIMUM OF 0.5 GALLONS PER MINUTE .
☐	FOOT ACTUATED CONTROL VALVES , AND OUTLET DEVICES THAT LIMIT THE FLOW OF HOT WATER TO A MAXIMUM OF 0.75 GALLONS PER MINUTE .
☒	LAVATORIES IN RESTROOM OF PUBLIC FACILITIES SHALL BE EQUIPPED WITH CONTROLS TO LIMIT THE OUTLET TEMPERATURE TO 110° F. PROVIDE WITH WATTS #LFMMV

PLUMBING GENERAL NOTES

1. SEE ARCHITECTURAL DRAWINGS FOR EXACT LOCATION OF ALL PLUMBING FIXTURES, DRAINS AND EQUIPMENT.
2. COORDINATE ALL LOCATIONS, SIZES AND ELEVATIONS OF ALL SLEEVES THROUGH BEAMS, SLABS AND FOOTINGS WITH STRUCTURAL AND ARCHITECTURAL DRAWINGS.
3. ALL HORIZONTAL WASTE LINES SHALL BE RUN AT A MINIMUM SLOPE OF 1/4" PER FOOT UNLESS OTHERWISE NOTED ON PLAN.
4. ALL HORIZONTAL STORM DRAINS AND OVERFLOW DRAIN LINES SHALL BE RUN AT A SLOPE OF 1/8" PER FOOT UNLESS OTHERWISE NOTED ON PLAN.
5. COORDINATE AND VERIFY EXACT LOCATION, SIZE, POINTS OF CONNECTION AND INVERT ELEVATIONS OF UTILITY SERVICE PIPING BEFORE TRENCHING OR INSTALLATION.
6. COORDINATE WITH ARCHITECTURAL DRAWINGS FOR WALL AND PARTITION CONSTRUCTION AND THICKNESS WHERE PLUMBING PIPING OR EQUIPMENT IS INDICATED.
7. THE LOCATION AND ELEVATION OF ALL PLUMBING PIPING SHALL BE VERIFIED AND COORDINATED WITH ALL OTHER TRADES, STRUCTURAL CONDITIONS AND BUILDING CONSTRUCTION PRIOR TO START OF INSTALLATION.
8. ALL VALVES AND COCKS SHALL BE LOCATED TO BE READILY ACCESSIBLE. WHERE VALVES ARE INSTALLED WITHIN OR BEHIND WALLS, PARTITIONS OR CEILINGS, AN ACCESS PANEL SHALL BE INSTALLED.
9. ALL OUTLETS FOR FUTURE CONNECTIONS SHALL BE INSTALLED SO AS TO PERMIT EASY CONNECTION – COORDINATE WITH DUCT WORK, STRUCTURAL CONDITIONS AND ARCHITECTURAL LAYOUT.
10. ALL PLUGGED OR CAPPED WASTE OUTLETS FOR FUTURE CONNECTIONS SHALL BE INSTALLED ABOVE CEILING WITH PIPE INVERT +4 INCHES ABOVE THE CEILING.
11. ALL PLUGGED OR CAPPED VENT OUTLETS FOR FUTURE CONNECTIONS SHALL BE INSTALLED ABOVE CEILING WITH PIPE INVERT 12" FROM BOTTOM OF SLAB.
12. ALL WALL MOUNTED ACCESS PANELS AND WALL CLEANOUTS SHALL BE MOUNTED AS LOW AS POSSIBLE UNLESS NOTED OTHERWISE OR AS INDICATED IN ARCHITECTURAL PLANS OR AS REQUIRED. CONTRACTOR SHALL GET ARCHITECT AND ENGINEER APPROVAL FOR ALL LOCATIONS PRIOR TO INSTALLATION OF WALL GYPSUM BOARD.
13. THESE DRAWINGS ARE DIAGRAMMATIC . THE LOCATION & ELEVATION OF ALL PLUMBING PIPING IS APPROXIMATE AND SHALL BE VERIFIED AND COORDINATED WITH ALL OTHER TRADES, STRUCTURAL CONDITIONS AND BUILDING CONSTRUCTION PRIOR TO START OF INSTALLATION.
14. PENETRATIONS OF PIPES, ETC, IN WALLS REQUIRING PROTECTED OPENINGS SHALL BE FIRE STOPPED. FIRE STOP MATERIAL SHALL BE A TESTED ASSEMBLY APPROVED BY THE STATE FIRE MARSHAL.
15. ALL HOT WATER PIPE SHALL BE INSULATED INCLUDING PIPING IN THE WALLS.
16. WATER SUPPLY AND DRAIN PIPES UNDER LAVATORIES AND SINKS SHALL BE INSULATED OR OTHERWISE CONFIGURED TO PROTECT AGAINST CONTACT. THERE SHALL BE NO SHARP OR ABRASIVE SURFACES UNDER LAVATORIES AND SINKS.
17. ALL REQUIRED CLEANOUTS SHALL BE INSTALLED AS PER SECTION 707.0 OF THE PLUMBING CODE.
18. ROOF DRAIN AND OVERFLOW PIPING WITHIN THE BUILDING SHALL UTILIZE APPROVED DRAINAGE FITTINGS.
19. CLEANOUTS FOR BUILDING STORM DRAINS SHALL COMPLY WITH THE REQUIREMENTS OF SECTION 719.0 OF THE PLUMBING CODE.
20. NEW BUILDING STORM DRAINAGE SYSTEM AND PARTS OF EXISTING SYSTEMS THAT HAVE BEEN ALTERED, EXTENDED OR REPAIRED SHALL BE TESTED AS DESCRIBED IN SECTION 1109.0 OF THE PLUMBING CODE.
21. DIELECTRIC UNIONS SHALL BE USED AT ALL POINTS OF CONNECTION WHERE THERE IS A DISSIMILARITY OF METALS.
22. ALL VENTS THROUGH ROOF SHALL MAINTAIN A MINIMUM OF 10 FT. CLEARANCE AND 3 FEET ABOVE OF ANY WINDOW, DOOR, OPENING, AIR INTAKE OR VENT SHAFT.
23. HOT WATER TEMPERATURE LIMITATION DEVICE SHALL BE INSTALLED FOR PUBLIC LAVATORIES, SHOWERS & TUBS (WHIRLPOOL) IN ACCORDANCE WITH ASSE 1070 & 1069, RESPECTIVELY.
24. PROVIDE WALL CLEANOUTS TO ALL SINKS, LAVATORIES AND URINALS.
25. NONWATER URINALS SHALL BE INSTALLED PER SECTION 412.1.3 OF THE CALIFORNIA PLUMBING CODE; MAINTENANCE SHALL BE PERFORMED IN ACCORDANCE TO MANUFACTURER'S INSTRUCTIONS AFTER INSTALLATION.
26. NONWATER URINALS SHALL BE INSTALLED WITH WATER DISTRIBUTION ROUGH-IN BEHIND THE WALL WITH AN ACCESS PANEL TO ALLOW FOR INSTALLATION OF AN APPROVED BACKFLOW PREVENTION DEVICE.
26. ALL MECHANICAL EQUIPMENT PRODUCING CONDENSATE DRAIN MUST BE PIPED AND DISCHARGED TO THE NEAREST APPROVED RECEPTOR.

LEGEND

SYMBOL	ABBR.	DESCRIPTION
	S OR W	SOIL OR WASTE ABOVE FLOOR OR GRADE
	S OR W	SOIL OR WASTE BELOW FLOOR OR GRADE
GW	GW	GREASE WASTE BELOW FLOOR OR GRADE
AW	AW	ACID WASTE ABOVE FLOOR OR GRADE
AW	AW	ACID WASTE BELOW FLOOR OR GRADE
SD	SD	STORM DRAIN ABOVE FLOOR OR GRADE
SD	SD	STORM DRAIN BELOW FLOOR OR GRADE
OD	OD	OVERFLOW DRAIN ABOVE FLOOR OR GRADE
OD	OD	OVERFLOW DRAIN BELOW FLOOR OR GRADE
	V	SANITARY VENT
	CW	COLD WATER
ICW	ICW	INDUSTRIAL COLD WATER
RW	RW	RECYCLED / RECLAIMED WATER
	HW	HOT WATER
	HWR	HOT WATER RETURN
F	F	FIRE MAIN
D	D	INDIRECT DRAIN LINE
CD	CD	CONDENSATE DRAIN
SCD	SCD	SECONDARY CONDENSATE DRAIN
PCD	PCD	PUMPED CONDENSATE DRAIN
G	G	FUEL GAS
MG	MG	MEDIUM PRESSURE FUEL GAS, 5 PSI
TP	TP	TRAP PRIMER
RTP	RTP	RECYCLED WATER TRAP PRIMER
		DIRECTION OF FLOW
	P.G.	PRESSURE GAUGE W/PETE COCK
	G.C.	GAS COCK
	P.R.V.	PRESSURE REDUCING VALVE
	G.V.	GATE VALVE
	L.B.V.	LOCKING BALL VALVE
	FCO	FLOOR CLEANOUT
	WCO	WALL CLEANOUT
		DOWN
		RISE
		UNION
%		SLOPE IN DIRECTION OF FLOW
	W.H.A.	WATER HAMMER ARRESTOR
	P.O.C.	POINT OF CONNECTION
	RPBP	REDUCED PRESSURE BACKFLOW PREVENTER
(E)	EXIST. (E)	EXISTING
	ABV.	ABOVE
	A.F.F.	ABOVE FINISHED FLOOR
	A.P.	ACCESS PANEL
	ASS'Y	ASSEMBLY
	BEH.	BEHIND
	BEL.	BELOW
	BLDG.	BUILDING
	BMCS	BUILDING MANAGEMENT AND CONTROL SYSTEM
	C.I.	CAST IRON
	CLG.	CEILING
	COTG	CLEANOUT TO GRADE
	CO.	CLEAN OUT
	CONT.	CONTINUATION
	FFE	FINISHED FLOOR ELEVATION
	DET.	DETAIL
	DN	DOWN
	DWG'S	DRAWINGS
	EA	EACH
	ELEC.	ELECTRIC
	EQUIP	EQUIPMENT
	FH	FIRE HYDRANT
	FIN	FINISHED
	FU	FIXTURE UNIT
	FLR	FLOOR
	FR.	FROM
	GPF	GALLONS PER FLUSH
	GPM	GALLONS PER MINUTE
	GR	GRADE
	HDR	HEADER
	I.E.	INVERT ELEVATION
	MECH	MECHANICAL
	S.O.C.	SHUT-OFF COCK
	TYP	TYPICAL
	VTR	VENT THROUGH ROOF
	W/	WITH

PLUMBING SHEET INDEX

P0.01	PLUMBING LEGEND, ABBREVIATIONS, NOTES & SHEET LIST
P0.02	PLUMBING SCHEDULES
P1.01	PLUMBING SITE PLAN
P1.102	PLUMBING FLOOR PLAN
P5.01	PLUMBING DETAILS

TOTAL SHEET COUNT: 5

IDENTIFICATION STAMP
DIV. OF THE STATE ARCHITECT
APP: 01-120592 INC:
REVIEWED FOR
SS ☑ FLS ☑ ACS ☑
DATE: 7/11/2023

OWNER: San Rafael City Schools

PROJECT NAME: Venetia Valley School Middle School Restroom Addition

CLIENT ADDRESS: Enter address here

REGISTERED PROFESSIONAL ENGINEER ROGER CARTER No. M30980 EXP. 06-30-23 MECHANICAL STATE OF CALIFORNIA

REVISIONS:

	DESCRIPTION	DATE
1		
2		
3		
4		
5		
6		
7		
8		
9		
10		

PROJECT NO: Project Number

DATE ISSUED: Issue Date

SCALE: As indicated

P0.01

LEGEND, NOTES, & SHEET LIST

tk1sc COLLABORATIVE
11870 Pierce Street, Suite 160
Riverside, California 92505
951.299.4160 www.tk1sc.com

Project Leader - Bill Voller
Plumbing Lead - Joel Baldovino
tk1sc Job #: B2203109.000

ELECTRIC WATER HEATER

UNIT NO.	MANUFACTURER & MODEL NO.	LOCATION	SERVICE	STORAGE CAPACITY	REC. @ 60° T.R.	ELECTRICAL				DIMENSION		OPER. WEIGHT	REMARKS
						KW	V	ø	HZ	DIA.	HT.		
EHW-1	BRADFORD WHITE LE120U3-1	CUSTODIAN ROOM (#3 PORTABLE)	DOMESTIC HOT WATER	20 GAL.	31 GAL/HR.	4.5	208	3	60	18"	25"	230 LBS	SINGLE ELEMENT AND NON- SIMULTANEOUS OPERATION.

CIRCULATING PUMP

UNIT NO.	MANUFACTURER & MODEL NO.	LOCATION	SERVICE	TYPE	GPM	TDH FT	MOTOR					OPER. WT. LBS.	REMARKS
							HP	RPM	V	PH	HZ		
CP-1	GRUNDFOS UP 15-42	JANITOR CLOSET (D101)	DOMESTIC HOT WATER	IN-LINE	10	10	1/12	1750	120	1	60	20	ALL BRONZE WIH 7-DAY TIMECLOCK

WATER SYSTEM CALCULATION

AVAILABLE PRESSURE AT BLDG EXTERIOR = 130 P.S.I.
PROVIDE WITH PRV, ZURN WILKINS #500XLYSBR, PRIOR TO GOING INTO THE BUILDING SET AT 50 PSI

TOTAL FIXTURE UNITS:
PORTABLE: 85 FU, 64 GPM

LOSSES:		PORTABLE
(E) 4" METER @ 1200 GPM	=	N/A
4" RPBP @ 1200 GPM	=	N/A
STATIC LOSS (.433 X -- FT.)	=	@ 15' = 6.5
RESIDUAL FIXTURE	=	30 PSI
TOTAL	=	36.5 P.S.I.

PRESSURE AVAILABLE FOR FRICTION LOSS: 50 PSI – 36.5 PSI = 13.5 P.S.I.

90 FT.

SYSTEM EQUIVALENT LENGTH: = 90 + 25% = 112.5 FT.
(METER TO RESIDUAL FIXTURE)

ALLOWABLE AVERAGE LOSS DUE TO FRICTION
PER 100 FT. OF PIPE: 13.5 PSI / 112.5 FT. X 100 FT. = 12 PSI/100 FT.

COLD WATER SYSTEM SIZING IS BASED ON 4 PSI /100' OR 8 FT. PER SECOND MAXIMUM VELOCITY, WHICHEVER RESTRICTION IS GREATER.

HOT WATER SYSTEM SIZING IS BASED ON 4 PSI /100' OR 5 FT. PER SECOND MAXIMUM VELOCITY, WHICHEVER RESTRICTION IS GREATER.

NOTE:
DOMESTIC HOT AND COLD WATER PIPE SIZING IS IN ACCORDANCE WITH THE REQUIREMENTS OF THE 2016 CALIFORNIA PLUMBING CODE, APPENDIX "A"

DOMESTIC WATER PIPE SIZING SCHEDULE

(BASED ON 4 PSI/100 FT. OR MAX. VELOCITY OF 8 FPS COLD & 5 FPS HOT)

SIZE	MAXIMUM FIXTURE UNITS			VELOCITY (FT./SEC.)		G.P.M.	
	FLUSH TANK		FLUSH VALVE				
	HW	CW		HW	CW	HW	CW
½"	1	1	0	2.6	2.6	2	2
¾"	6	6	0	3.2	3.2	5	5
1"	15	15	0	3.9	3.9	11	11
1¼"	28	30	0	4.4	4.4	19	20
1½"	46	56	14	4.9	4.9	27	31
2"	119	205	95	5.0	5.9	48	66
2½"	245	455	329	5.0	6.7	74	115
3"	406	719	666	5.0	7.5	105	165

PLUMBING FIXTURE SCHEDULE

UNIT NO.	DESCRIPTION	ROUGH-IN SIZES					REMARKS
		TRAP	W	V	CW	HW	
WC-1	WATER CLOSET (ACCESSIBLE) A.S. AFWALL #2856.128	INT.	4"	2"	1"	–	WALL-HUNG, 1.28 GPF MANUAL-OPERATED FLUSH VALVE SLOAN #111-1.28 W/ OLSONITE TOILET SEAT #95SSCT; JR SMITH #0210Y CARRIER
L-1	LAVATORY (ACCESSIBLE) A.S. LUCERNE #0355.012	2"	2"	1-1/2"	1/2"	1/2"	WALL-HUNG, WITH MANUAL FAUCET AT 0.35 GPM CHICAGO #3600-E39VPAB W/ #1017 MOUNT AT ACCESSIBLE HEIGHT (CBC/ADA). REFER TO ARCH TO MOUNTING HEIGHT. PROVIDE WITH MCGUIRE SUPPLY & DRAIN PROWRAP & TMV-1
DF-1	DRINKING FOUNTAIN MDF #10145 SM	--	--	--	3/4"	–	HI-LO W/ BOTTLE FILLER, STAINLESS STEEL, WITH RECESS HOSE BIBB W/ LOCK DOOR, VANDAL RESISTANT (CBC/ADA). COORDINATE COLOR SELECTION WITH ARCHITECT. WET-WELL TO BE PROVIDED.
TMV-1	THERMOSTATIC MIXING VALVE WATTS #LFMMV	–	–	–	–	–	TEMPERATURE-LIMITING DEVICE FOR LAVATORIES; SET OUTLET TEMPERATURE TO 105°F
SS-1	SERVICE SINK A.S. FLORWELL #7741.000 WITH #7745.811	3"	3"	2"	3/4"	3/4"	FLOOR MOUNTED, CORNER TYPE, ENAMELED CAST IRON W/ VINYL RIM GUARD, 3" OUTLET, W/ TOP BRACE FAUCET, BUCKET HOOK, VB AND HOSE; CHICAGO FAUCET #897-RCP
FS-1	FLOOR SINK J.R.SMITH #3150Y-12	2"	2"	2"	1/2" TP	–	ACID RESISTANT COATED, CAST IRON DRAIN, DOME STRAINER & DECK CLAMP, 3/4 GRATE FOR DISCHARGE PIPES.
FD-1	FLOOR DRAIN J.R.SMITH #2005	2"	2"	1-1/2"	1/2" TP	–	JR SMITH #2005-A COMPLETE WITH TRAP PRIMER CONNECTION. SEE FLOOR PLANS FOR EXACT SIZE.
TP-1	TRAP PRIMER PPP #P1-500	–	–	–	1/2"	–	AND DISTRIBUTION UNIT BEHIND ACCESS PANEL
WHA	WATER HAMMER ARRESTER PPP #SC SERIES	–	–	–	–	–	PISTON OPERATED
HB-1	HOSE BIBB (EXTERIOR) ACORN #8104	–	–	–	3/4"	–	HOSE & SUPPLY BOX WITH VACUUM BREAKER
HB-2	HOSE BIBB (INTERIOR) ACORN #8121-LF	–	–	–	3/4"	–	WITH VACUUM BREAKER

NOTE: ALL DRAINS CONNECTED TO THE SEWER SUBJECT TO INFREQUENT USE SHALL BE PROVIDED WITH A TRAP PRIMER.

WATER HEATER SIZING (PORTABLE)

BLDG TYPE: SCHOOL DELTA T: 60°F DEMAND FACTOR: 0.40 STORAGE CAPACITY FACTOR: 1.0

FIXTURE	QTY	GPH	TOTAL GPH
PUB LAV	9	2	18
MOP SINK	1	20	20
TOTAL DEMAND			38

CALCULATION:
GPH x DF x SCF = PROB MAX DEMAND
38 x 0.40 x 1 = 15.2 GAL
BTUH (INPUT) DEMAND:
$\frac{\text{GPH x 8.33 x TEMP. RISE}}{\text{\% EFFICIENCY}}$ =BTUH DEMAND
$\frac{15.2 \times 8.33 \times 60}{90\%}$ =8,441 BTUH
1KW = 3414 BTUH
8,441 BTUH / 3414 = 2.47 KW

STORM DRAIN SIZING

2019 CPC, TABLE 1103.1 CITY OF SAN RAFAEL RAINFALL RATE: 3" PER HOUR

SIZE	SQUARE FOOTAGE				
	ROOF DRAINS, LEADERS, VERTICAL WATER PIPING	1/8" PER FOOT SLOPE		1/4" PER FOOT SLOPE	
		GPM	SF	GPM	SF
2"	960	–	–	–	–
3"	2930	34	1,096	48	1,546
4"	6130	78	2,506	110	3,533
5"	11530	139	4,453	196	6,293
6"	17995	222	7,133	314	10,066
8"	38660	478	15,330	677	21,733
10"	–	860	27,600	1214	38,950
12"	–	1384	44,400	1953	62,600

IDENTIFICATION STAMP
DIV. OF THE STATE ARCHITECT
APP: 01-120592 INC:
REVIEWED FOR
SS ☑ FLS ☑ ACS ☑
DATE: 7/11/2023

OWNER: San Rafael City Schools

PROJECT NAME: Venetia Valley School Middle School Restroom Addition

CLIENT ADDRESS: Enter address here

REGISTERED PROFESSIONAL ENGINEER ROGER CARTER No. M30980 EXP. 06-30-23 MECHANICAL STATE OF CALIFORNIA

REVISIONS:

	DESCRIPTION	DATE
1		
2		
3		
4		
5		
6		
7		
8		
9		
10		

PROJECT NO: Project Number
DATE ISSUED: Issue Date
SCALE: As indicated

P0.02

SCHEDULES

tk1sc COLLABORATIVE
11870 Pierce Street, Suite 160
Riverside, California 92505
951.299.4160 www.tk1sc.com
Project Leader - Bill Voller
Plumbing Lead - Joel Baldovino
tk1sc Job #: B2203109.000

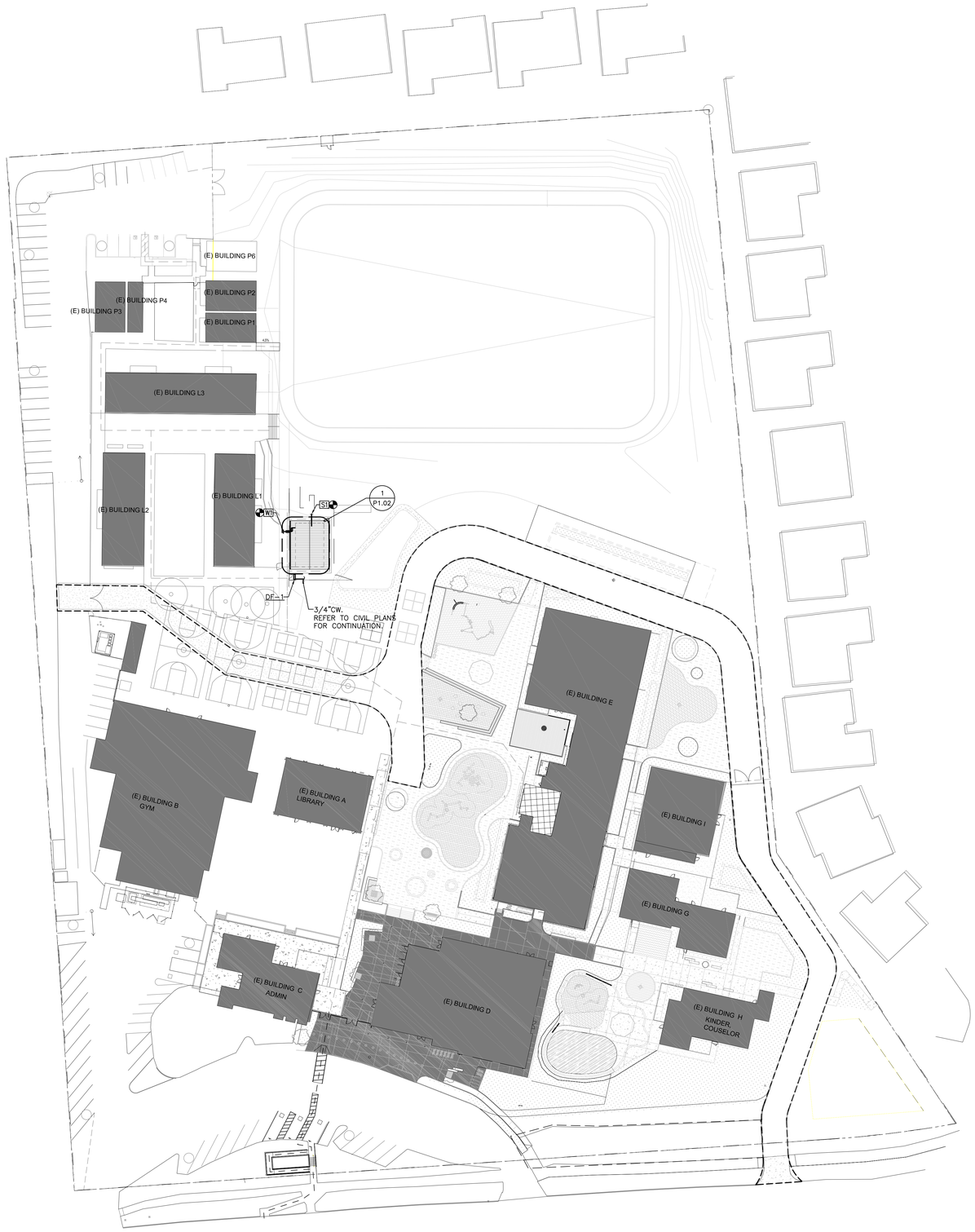

1 **Site Plan**
1" = 40'-0"

SITE UTILITY SCHEDULE

ITEM X#	SERVICE	SIZE	INVERT ELEVATION	ANTICIPATED LOAD
W1	DOMESTIC WATER	2" CW	-3.0'	85 FU
S1	SANITARY SEWER	4" SAN	-3.5'	74 DFU

NOTES:

W# DESIGNATES DOMESTIC WATER WITH SHUT-OFF VALVE IN CONCRETE YARD BOX. PROVIDE WITH PRV SET AT 50 PSI AGAINST THE WALL - MODEL ZURN WILKINS #500XLYSBR.

S# DESIGNATES SANITARY SEWER WITH CLEANOUT TO GRADE IN CONCRETE YARD BOX.

IDENTIFICATION STAMP
DIV. OF THE STATE ARCHITECT
APP: 01-120592 INC:
REVIEWED FOR
SS ☑ FLS ☑ ACS ☑
DATE: 7/11/2023

OWNER: San Rafael City Schools

PROJECT NAME: Venetia Valley School Middle School Restroom Addition

CLIENT ADDRESS: Enter address here

REGISTERED PROFESSIONAL ENGINEER
ROGER CARTER
No. M30980
EXP. 06-30-23
MECHANICAL
STATE OF CALIFORNIA

REVISIONS:

	DESCRIPTION	DATE
1		
2		
3		
4		
5		
6		
7		
8		
9		
10		

PROJECT NO: Project Number
DATE ISSUED: Issue Date
SCALE: As indicated

P1.01

PLUMBING SITE PLAN

tk1sc COLLABORATIVE
11870 Pierce Street, Suite 160
Riverside, California 92505
951.299.4160 www.tk1sc.com
Project Leader - Bill Voller
Plumbing Lead - Joel Baldovino
tk1sc Job #: B2203109.000

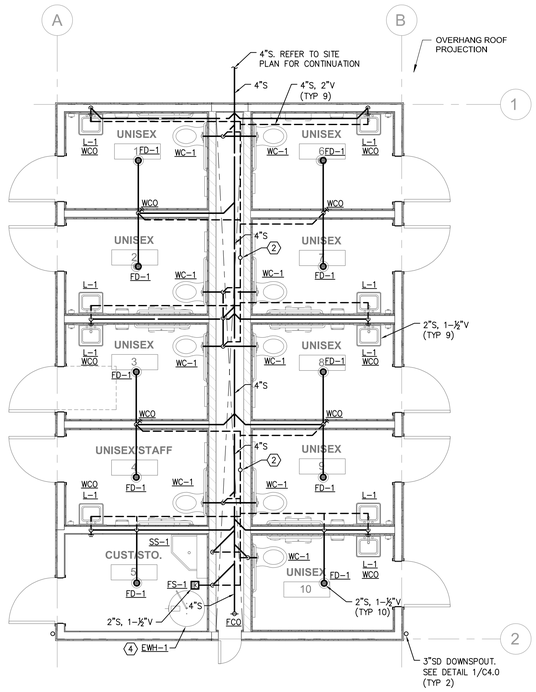

MS RESTROOM FLOOR PLAN - WASTE & VENT | 1/4" = 1'-0" | **2**

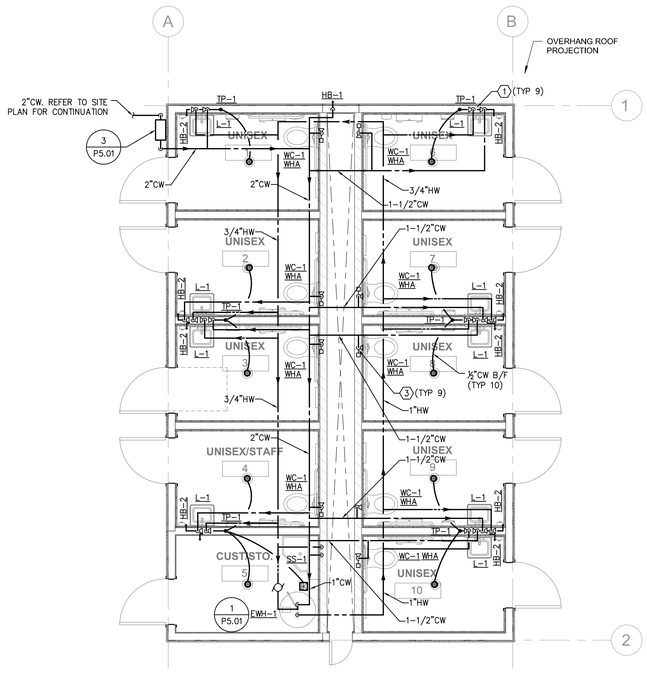

MS RESTROOM FLOOR PLAN - WATER | 1/4" = 1'-0" | **1**

CONSTRUCTION NOTES

1. HOT AND COLD WATER DOWN TO LAVATORY SHUT-OFF VALVES BEHIND ACCESS PANEL.
2. 4" VENT UP THRU ROOF.
3. 1-1/2" COLD WATER DOWN TO WATER CLOSET WITH SHUT-OFF VALVE BEHIND ACCESS PANEL.
4. WATER HEATER TEMPERATURE & PRESSURE RELIEF AND DRAINS DOWN AGAINST WALL AND TERMINATE WITH 1" AIR GAP ABOVE FLOOR SINK.

IDENTIFICATION STAMP
DIV. OF THE STATE ARCHITECT
APP: 01-120592 INC:
REVIEWED FOR
SS ☑ FLS ☑ ACS ☑
DATE: 7/11/2023

OWNER: San Rafael City Schools

PROJECT NAME: Venetia Valley School Middle School Restroom Addition

CLIENT ADDRESS: Enter address here

REGISTERED PROFESSIONAL ENGINEER
ROGER CARTER
No. M30980
EXP. 06-30-23
MECHANICAL
STATE OF CALIFORNIA

REVISIONS:

	DESCRIPTION	DATE

PROJECT NO: Project Number

DATE ISSUED: Issue Date

SCALE: As indicated

P1.02

PLUMBING ENLARGED PLAN

tk1sc COLLABORATIVE
11870 Pierce Street, Suite 160
Riverside, California 92505
951.299.4160 www.tk1sc.com

Project Leader - Bill Voller
Plumbing Lead - Joel Baldovino
tk1sc Job #: B2203109.000

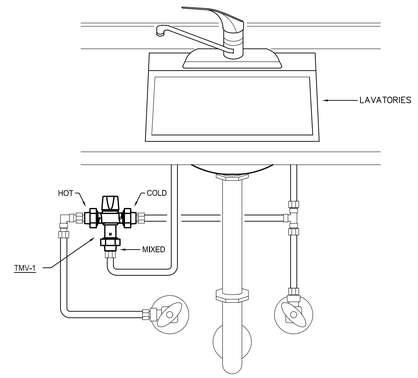

POINT-OF-USE MIXING VALVE — SCALE NONE — 4

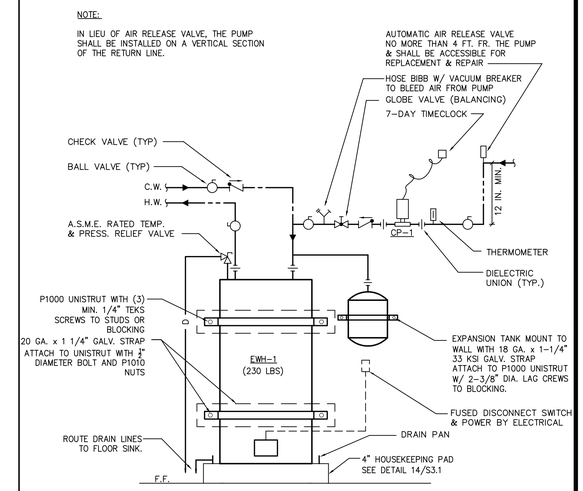

ELECTRIC WATER HEATER DETAIL — SCALE NONE — 1

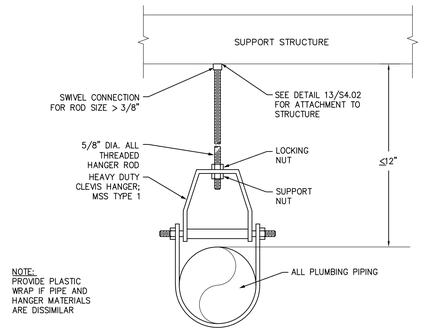

PIPE SUPPORT DETAIL — SCALE NONE — 5

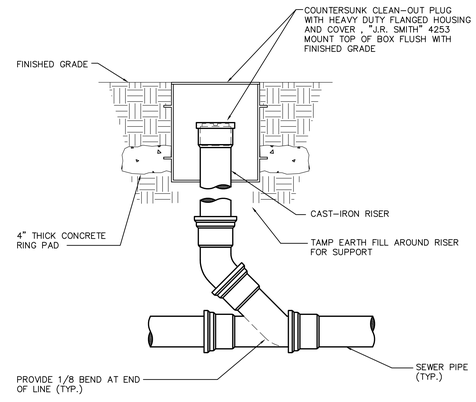

CLEANOUT DETAIL — SCALE NONE — 2

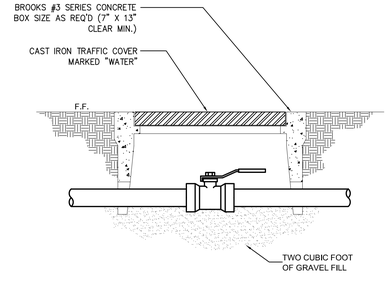

SHUT-OFF VALVE IN YARD BOX — SCALE NONE — 6

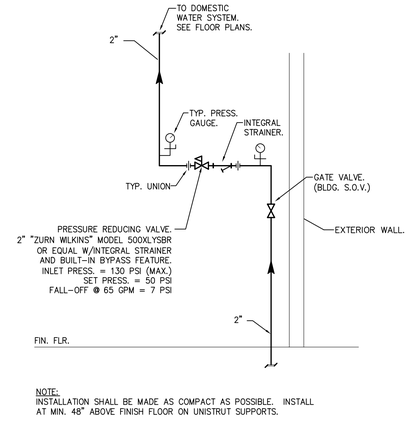

PRESSURE REGULATING VALVE ASSEMBLY — SCALE NONE — 3

-	SCALE -	10	-	SCALE -	7	POINT-OF-USE MIXING VALVE	SCALE NONE	4	ELECTRIC WATER HEATER DETAIL	SCALE NONE	1
-	SCALE -	11	-	SCALE -	8	PIPE SUPPORT DETAIL	SCALE NONE	5	CLEANOUT DETAIL	SCALE NONE	2
-	SCALE -	12	-	SCALE -	9	SHUT-OFF VALVE IN YARD BOX	SCALE NONE	6	PRESSURE REGULATING VALVE ASSEMBLY	SCALE NONE	3

IDENTIFICATION STAMP
DIV. OF THE STATE ARCHITECT
APP: 01-120592 INC:
REVIEWED FOR
SS ☑ FLS ☑ ACS ☑
DATE: 7/11/2023

OWNER: San Rafael City Schools

PROJECT NAME: Venetia Valley School Middle School Restroom Addition

CLIENT ADDRESS: Enter address here

REGISTERED PROFESSIONAL ENGINEER ROGGER CARTER No. M30980 EXP. 06-30-23 MECHANICAL STATE OF CALIFORNIA

REVISIONS:

	DESCRIPTION	DATE
1		
2		
3		
4		
5		
6		
7		
8		
9		
10		
11		

PROJECT NO: Project Number

DATE ISSUED: Issue Date

SCALE: As indicated

P5.01

PLUMBING DETAILS

tk1sc COLLABORATIVE
11870 Pierce Street, Suite 160
Riverside, California 92505
951.299.4160 www.tk1sc.com

Project Leader - Bill Voller
Plumbing Lead - Joel Baldovino
tk1sc Job #: B2203109.000